модуль ixys, igbt, мост Минск +375447584780
www.fotorele.net www.tiristor.by радиодетали, электронные компоненты
email minsk17@tut.by tel.+375 29 758 47 80 мтс

Мы не работаем с частными (физическими) лицами.
Мы работаем только с юридическими лицами(организациями) и ИП и только по безналичному расчёту.
каталог, описание, технические, характеристики, datasheet, параметры, маркировка,габариты, фото

IXYS КАТАЛОГ 2017г. Минск

IGBT, MOSFET модуль

SiC

IPM (SKiiP)

тиристорно - диодный модуль

мост диодный, однофазный, трёхфазный,

диоды, тиристоры,

драйверы

охладители, радиатор

каталог документация, datasheet, описание, технические характеристики скачать

Diode Modules, Dual

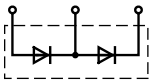

MDD...
MDM/NA...P...

I_{FAV} = 25 - 99 A

Type ➢ New	V_{RRM} V	I_{FAV} A	T_C °C	I_{FSM} 45°C 10 ms A	V_{F0} V	r_F mΩ	T_{VJM} °C	R_{thJC} K/W	R_{thCH} K/W	Fig. No.	Package style Outline drawings on pages O-31...O-54
MDMA 25P1200TG	1200	25	100	320	0.85	11.10	150	1.10	0.20	X125e	
MDMA 25P1600TG	1600										
➢ **MDMA 25P1800TG**	1800										
➢ **MDNA 25P2200TG**	2200										
MDD 26-08N1B	800	36	100	650	0.80	6.10	150	1.00	0.20		
MDD 26-12N1B	1200										
MDD 26-14N1B	1400										
MDD 26-16N1B	1600										
MDD 26-18N1B	1800										
MDMA 35P1200TG	1200	35	100	500	0.83	7.30	150	0.90	0.20		
MDMA 35P1600TG	1600										
➢ **MDMA 35P1800TG**	1800										
➢ **MDNA 35P2200TG**	2200										
MDD 44-08N1B	800	59	100	1150	0.80	4.30	150	0.59	0.20		
MDD 44-12N1B	1200										
MDD 44-14N1B	1400										
MDD 44-16N1B	1600										X125e **TO-240AA**
MDD 44-18N1B	1800										
MDMA 50P1200TG	1200	50	100	850	0.85	5.70	150	0.65	0.20		
MDMA 50P1600TG	1600										
➢ **MDMA 50P1800TG**	1800										
➢ **MDNA 50P2200TG**	2200										
MDD 56-08N1B	800	71	100	1400	0.80	3.00	150	0.51	0.20		
MDD 56-12N1B	1200										
MDD 56-14N1B	1400										
MDD 56-16N1B	1600										
MDD 56-18N1B	1800										
MDMA 65P1200TG	1200	65	100	1100	0.81	4.30	150	0.50	0.20		
MDMA 65P1600TG	1600										
➢ **MDMA 65P1800TG**	1800										
➢ **MDNA 65P2200TG**	2200										
MDD 72-08N1B	800	99	100	1700	0.80	2.30	150	0.35	0.20		
MDD 72-12N1B	1200										
MDD 72-14N1B	1400										
MDD 72-16N1B	1600										
MDD 72-18N1B	1800										
MDMA 85P1200TG	1200	85	100	1500	0.79	3.50	150	0.35	0.20		
MDMA 85P1600TG	1600										
➢ **MDMA 85P1800TG**	1800										
➢ **MDNA 85P2200TG**	2200										

Data according to IEC 60747 and refer to a single diode or thyristor unless otherwise stated.

Diode Modules, Dual

I_{FAV} = 110 - 240 A

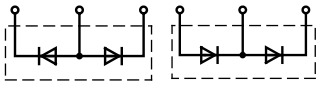

MDA... MDD... MDM/NA...P...

Type ➢ New	V_{RRM} V	I_{FAV} A	T_C °C	I_{FSM} 45°C 10 ms A	V_{F0} V	r_F mΩ	T_{VJM} °C	R_{thJC} K/W	R_{thCH} K/W	Fig. No.	Package style Outline drawings on pages O-31...O-54
MDD 95-08N1B	800	120	100	2800	0.75	1.95	150	0.260	0.20	X125e	
MDD 95-12N1B	1200										
MDD 95-14N1B	1400										X125e **TO-240AA**
MDD 95-16N1B	1600										
MDD 95-18N1B	1800										
MDD 95-20N1B	2000										
MDD 95-22N1B	2200										
MDA 95-22N1B	2200										
MDMA 110P1200TG	1200	110	100	2000	0.82	2.80	150	0.300	0.20		
MDMA 110P1600TG	1600										
➢ **MDMA 110P1800TG**	1800										X126c **Y4**
➢ **MDNA 110P2200TG**	2200										
MDMA 140P1200TG	1200	140	100	2800	0.78	2.20	150	0.230	0.20		
MDMA 140P1600TG	1600										
MDMA 140P1800TG	1800										
MDNA 140P2200TG	2200										
MDD 142-08N1	800	165	100	4700	0.80	1.30	150	0.210	0.10	X126c	
MDD 142-12N1	1200										
MDD 142-14N1	1400										
MDD 142-16N1	1600										X131c **Y1**
MDD 142-18N1	1800										
➢ **MDMA 180P1600YD**	1600	180	100	4400	0.77	1.40	150	0.200	0.11		
➢ **MDNA 180P2200YD**	2200										
MDD 172-08N1	800	190	100	6600	0.80	0.80	150	0.210	0.10		
MDD 172-12N1	1200										
MDD 172-14N1	1400										
MDD 172-16N1	1600										
MDD 172-18N1	1800										
➢ **MDMA 210P1600YD**	1600	210	100	6600	0.67	1.20	150	0.170	0.09		X141c **SimBus A**
➢ **MDNA 210P2200YD**											
MDD 200-14N1	1400	224	100	10500	0.80	0.60	150	0.130	0.10		
MDD 200-16N1	1600										
MDD 200-18N1	1800										
MDD 200-22N1	2200										
MDD 175-28N1	2800	240	100	8500	0.74	1.27	150	0.140	0.04	X131c	
MDD 175-34N1	3400										
MDMA 200P1600SA	1600	200	110	6000	0.76	1.40	150	0.150	0.08	X141c	

Data according to IEC 60747 and refer to a single diode or thyristor unless otherwise stated.

Diode Modules, Single and Dual

I_{FAV} = 270 - 700 A

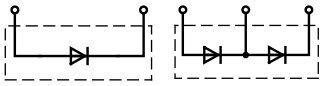

MDO... MDD... MDM/NA...P...

Type	V_{RRM}	I_{FAV}	T_C	I_{FSM} 45°C 10 ms	V_{F0}	r_F	T_{VJM}	R_{thJC}	R_{thCH}	Fig. No.	Package style Outline drawings on pages O-31...O-54
➢ New	V	A	°C	A	V	mΩ	°C	K/W	K/W		
MDD 255-12N1	1200	270	100	9500	0.80	0.60	150	0.140	0.04	X131c	X126c Y4
MDD 255-14N1	1400										
MDD 255-16N1	1600										
MDD 255-18N1	1800										
MDD 255-20N1	2000										
MDD 255-22N1	2200										
➢ MDMA 280P1600YD	1600	280	100	10500	0.74	1.00	150	0.130	0.06	X126c	
➢ MDNA 280P2200YD	2200										
➢ MDMA 300P1600PTSF	1600	300	100	8000	0.78	1.3	150	0.1	0.05	X143a	X129c Y2
➢ MDNA 300P2200PTSF	2200										
MDD 310-08N1	800	305	100	11500	0.75	0.63	150	0.129	0.04	X129c	
MDD 310-12N1	1200										
MDD 310-14N1	1400										
MDD 310-16N1	1600										
MDD 310-18N1	1800										X131c Y1
MDD 310-20N1	2000										
MDD 310-22N1	2200										
MDD 312-12N1	1200	310	100	10500	0.80	0.60	150	0.120	0.04	X131c	
MDD 312-14N1	1400										
MDD 312-16N1	1600										
MDD 312-18N1	1800										
MDD 312-20N1	2000										X132b Y1
MDD 312-22N1	2200										
MDMA 380P1600KC	1600	380	100	11000	0.75	0.53	150	0.110	0.04		
➢ MDMA 380P1800KC	1800										
➢ MDNA 380P2200KC	2200										
➢ MDMA 425P1600PTSF	1600	425	100	10000	0.77	1.01	150	0.07	0.04	X143a	
➢ MDNA 425P2200PTSF	2200										
MDO 500-12N1	1200	560	85	15000	0.80	0.38	140	0.072	0.02	X132b	X142c ComPack
MDO 500-14N1	1400										
MDO 500-16N1	1600										
MDO 500-18N1	1800										
MDO 500-20N1	2000										
MDO 500-22N1	2200										
MDO 600-16N1	1600	608	85	15000	0.76	0.32	140	0.072	0.02		
➢ MDMA 600P1600PTSF	1600	600	100	15000	0.78	0.67	150	0.05	0.03	X143a	X143a SimBus F PFP
➢ MDNA 600P2200PTSF	2200										
MDMA 700P1600CC	1600	700	100	20000	0.78	0.35	150	0.055	0.02	X142c	
➢ MDMA 700P1800CC	1800										
➢ MDNA 700P2200CC	2200										

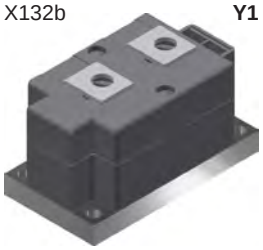

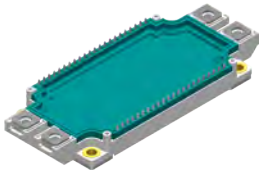

See data sheet for pin arrangement

For more single and dual diode modules with higher current, please see pages 149 - 151

Data according to IEC 60747 and refer to a single diode or thyristor unless otherwise stated.

Thyristor / Diode Modules

I_{TAV} = 25 - 80 A

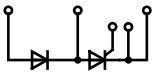

MCD...io1
MCM/NA..PD..

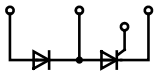

MCD...io8/...io6
CLA/CMA..PD..

Type ➢ New	V_{RRM} V_{DRM} V	I_{TAV} A	T_C °C	$I_{T(RMS)}$ A	I_{TSM} 45°C 10 ms A	V_{T0} V	r_T mΩ	T_{VJM} °C	R_{thJC} K/W	R_{thCH} K/W	Fig. No.	Package style Outline drawings on pages O-31...O-54
MCMA 25PD1200TB	1200	25	82	40	400	0.87	13.0	140	1.20	0.20	X125b	
MCMA 25PD1600TB	1600											
MCD 26-08io1B	800	27	85	50	520	0.85	11.0	125	0.88	0.20		
MCD 26-12io1B	1200											
MCD 26-14io1B	1400											
MCD 26-16io1B	1600											X027a **SOT-227B miniBLOC**
MCD 26-08io8B	800	27	85	50	520	0.85	11.0	125	0.88	0.20	X125d	
MCD 26-12io8B	1200											
MCD 26-14io8B	1400											
MCD 26-16io8B	1600											
MCMA 35PD1200TB	1200	35	85	55	520	0.87	9.8	140	0.90	0.20	X125b	
MCMA 35PD1600TB	1600											
MCD 40-12io6	1200	40	85	63	500	0.87	10.5	150	0.70	0.10	X027a	
MCD 40-16io6	1600											
MCD 44-08io1B	800	49	85	77	1150	0.85	5.3	125	0.53	0.20	X125b	
MCD 44-12io1B	1200											
MCD 44-14io1B	1400											
MCD 44-16io1B	1200											
MCD 44-18io1B	1600											
MCD 44-08io8B	800	49	85	77	1150	0.85	5.3	125	0.53	0.20	X125d	X125b **TO-240AA**
MCD 44-12io8B	1200											
MCD 44-14io8B	1400											
MCD 44-16io8B	1600											
MCD 44-18io8B	1800											
➢ **MCNA 40PD2200TB**	2200	40	85	63	500	0.84	11.4	140	0.70	0.20	X125b	
MCMA 50PD1200TB	1200	50	85	79	800	0.89	5.3	140	0.70	0.20		
MCMA 50PD1600TB	1600											
CLA 60PD1200NA	1200	60	100	94	1100	0.79	4.8	150	0.55	0.10	X027a	
MCD 56-08io1B	800	60	85	100	1500	0.85	3.7	125	0.45	0.20	X125b	
MCD 56-12io1B	1200											
MCD 56-14io1B	1400											
MCD 56-16io1B	1600											X125d **TO-240**
MCD 56-18io1B	1800											
MCD 56-08io8B	800	60	85	100	1500	0.85	3.7	125	0.45	0.20	X125d	
MCD 56-12io8B	1200											
MCD 56-14io8B	1400											
MCD 56-16io8B	1600											
MCD 56-18io8B	1800											
➢ **MCNA 55PD2200TB**	2200	55	85	86	800	0.90	9.0	150	0.50	0.20	X125b	
MCMA 65PD1200TB	1200	65	85	105	1150	0.85	4.8	140	0.50	0.20		
MCMA 65PD1600TB	1600											
➢ **MCMA 65PD1800TB**	1800											
CMA 80PD1600NA	1600	80	80	126	1070	0.86	5.5	150	0.45	0.10	X027a	

Data according to IEC 60747 and refer to a single diode or thyristor unless otherwise stated.

Thyristor / Diode Modules

I_{TAV} = 75 - 165 A

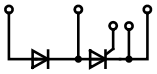

MCD...io1
MCM/NA..PD..

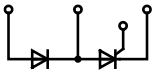

MCD...io8
CLA..PD..

Type ➢ New	V_{RRM} V_{DRM} V	I_{TAV} A	T_C °C	$I_{T(RMS)}$ A	I_{TSM} 45°C 10 ms A	V_{T0} V	r_T mΩ	T_{VJM} °C	R_{thJC} K/W	R_{thCH} K/W	Fig. No.	Package style Outline drawings on pages O-31...O-54
MCD 72-08io1B	800	85	85	180	1700	0.85	3.20	125	0.30	0.20	X125b	X027a **SOT-227B miniBLOC**
MCD 72-12io1B	1200											
MCD 72-14io1B	1400											
MCD 72-16io1B	1600											
MCD 72-18io1B	1800											
MCD 72-08io8B	800	85	85	180	1700	0.85	3.20	125	0.30	0.20	X125d	
MCD 72-12io8B	1200											
MCD 72-14io8B	1400											
MCD 72-16io8B	1600											
MCD 72-18io8B	1800											
➢ **MCNA 75PD2200TB**	2200	75	85	118	1050	0.90	6.50	140	0.38	0.20	X125b	
MCMA 85PD1200TB	1200	85	85	135	1500	0.85	3.90	140	0.38	0.20		
MCMA 85PD1600TB	1600											
➢ **MCMA 85PD1800TB**	1800											
CLA 100PD1200NA	1200	100	85	150	1500	0.83	3.70	150	0.35	0.10	X027a	X125b **TO-240AA**
MCD 94-20io1B	2000	104	85	180	1700	0.85	3.20	125	0.22	0.20	X125b	
MCD 94-22io1B	2200											
MCD 95-08io1B	800	116	85	180	2250	0.85	2.40	125	0.22	0.20		
MCD 95-12io1B	1200											
MCD 95-14io1B	1400											
MCD 95-16io1B	1600											
MCD 95-18io1B	1800											
MCD 95-08io8B	800	116	85	180	2250	0.85	2.40	125	0.22	0.20	X125d	
MCD 95-12io8B	1200											
MCD 95-14io8B	1400											X125d **TO-240**
MCD 95-16io8B	1600											
MCD 95-18io8B	1800											
➢ **MCNA 95PD2200TB**	2200	95	85	149	1400	0.90	5.00	140	0.30	0.20	X125b	
MCMA 110PD1200TB	1200	110	85	170	1900	0.85	3.30	140	0.30	0.20		
MCMA 110PD1600TB	1600											
➢ **MCMA 110PD1800TB**	1800											
MCNA 120PD2200TB	2200	120	85	190	1700	0.90	3.70	140	0.22	0.20		
MCMA 140PD1200TB	1200	140	85	200	2400	0.85	2.80	140	0.22	0.20		
MCMA 140PD1600TB	1600											
➢ **MCMA 140PD1800TB**	1800											
MCD 132-08io1	800	130	85	300	4750	0.80	1.50	125	0.23	0.10	X126b	X126b **Y4**
MCD 132-12io1	1200											
MCD 132-14io1	1400											
MCD 132-16io1	1600											
MCD 132-18io1	1800											
➢ **MCNA 150PD2200YB**	2200	150	85	235	4300	0.86	2.10	140	0.21	0.11		
MCD 161-20io1	2000	165	85	300	6000	0.80	1.60	125	0.155	0.07		
MCD 161-22io1	2200											

Data according to IEC 60747 and refer to a single diode or thyristor unless otherwise stated.

Thyristor / Diode Modules

I_{TAV} = 180 - 700 A

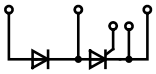

MCD...io1
MCM/NA..PD..

Type ➢ New	V_{RRM} V_{DRM} V	I_{TAV} A	T_C °C	$I_{T(RMS)}$ A	I_{TSM} 45°C 10 ms A	V_{T0} V	r_T mΩ	T_{VJM} °C	R_{thJC} K/W	R_{thCH} K/W	Fig. No.
MCD 162-08io1	800	181	85	300	6000	0.88	1.15	125	0.155	0.07	X126b
MCD 162-12io1	1200										
MCD 162-14io1	1400										
MCD 162-16io1	1600										
MCD 162-18io1	1800										
➢ **MCNA 180PD2200YB**	2200	180	85	280	5400	0.85	1.80	140	0.170	0.09	
MCMA 200PD1600SA	1600	200	85	314	6000	0.81	1.60	140	0.150	0.08	X141b
MCD 200-14io1	1400	216	85	340	8000	0.80	1.40	125	0.130	0.05	X126b
MCD 200-16io1	1600										
MCD 200-18io1	1800										
➢ **MCNA 220PD2200YB**	2200	220	85	345	7200	0.84	1.50	140	0.130	0.07	
MCD 224-20io1	2000	240	85	400	8000	0.80	0.76	130	0.139	0.04	X131b
MCD 224-22io1	2200										
MCD 225-12io1	1200	221	85	400	8000	0.80	0.76	130	0.157	0.04	
MCD 225-14io1	1400										
MCD 225-16io1	1600										
MCD 225-18io1	1800										
➢ **MCNA 250PD2200PTSF**	2200	250	85	400	5900	0.76	2.20	150	0.100	0.05	X143a
MCD 255-12io1	1200	250	85	450	9000	0.80	0.68	130	0.140	0.04	X131b
MCD 255-14io1	1400										
MCD 255-16io1	1600										
MCD 255-18io1	1800										
MCMA 260PD1600YB	1600	260	85	408	8300	0.81	1.23	140	0.130	0.08	X126b
➢ **MCMA 260PD1800YB**	1800										
MCMA 265PD1600KB	1600	260	85	408	8500	0.80	0.75	140	0.160	0.04	X131b
➢ **MCMA 265PD1800KB**	1800										
➢ **MCMA 280PD1600PTSF**	1600	280	85	440	7000	0.83	1.57	150	0.100	0.05	X143a
MCD 310-08io1	800	320	85	500	9200	0.80	0.82	140	0.112	0.04	X129b
MCD 310-12io1	1200										
MCD 310-14io1	1400										
MCD 310-16io1	1600										
MCD 310-18io1	1800										
MCD 310-20io1	2000	320	85	500	8000	0.80	0.82	140	0.112	0.04	
MCD 310-22io1	2200										
MCD 312-12io1	1200	320	85	520	9200	0.80	0.68	140	0.120	0.04	X131b
MCD 312-14io1	1400										
MCD 312-16io1	1600										
MCD 312-18io1	1800										
➢ **MCNA 360PD2200PTSF**	2200	360	85	570	8400	0.74	1.57	150	0.07	0.04	X143a
➢ **MCMA 400PD1600PTSF**	1600	400	85	630	10000	0.82	1.14	150	0.07	0.04	
➢ **MCNA 500PD2200PTSF**	2200	500	85	790	11000	0.75	1.11	150	0.05	0.03	
➢ **MCMA 550PD1600PTSF**	1600	550	85	864	13000	0.82	0.80	150	0.05	0.03	
➢ **MCNA 650PD2200CB**	2200	650	85	1020	16000	0.75	0.63	140	0.045	0.02	X142a
MCMA 700PD1600CB	1600	700	85	1100	19000	0.82	0.40	140	0.05	0.02	
➢ **MCMA 700PD1800CB**	1800										

Package style

Outline drawings on pages O-31...O-54

X126b **Y4**

X129b **Y2**

X131b **Y1**

X141b **SimBus A**

X142a **ComPack**

X143a **SimBus F PFP**

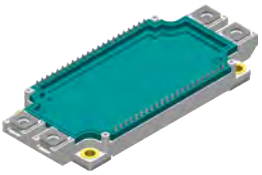

See data sheet for pin arrangement

For more thyristor / diode modules with higher current, please see pages 147, 148 and 151

Data according to IEC 60747 and refer to a single diode or thyristor unless otherwise stated.

Thyristor Modules, *Dual*

I_{TAV} = 18 - 60 A

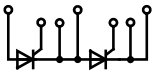

MCC...io1B
MCM/NA..P..

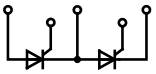

MCC...io8B

Type ➢ New	V_{RRM} V_{DRM} V	I_{TAV} A	T_C °C	$I_{T(RMS)}$ A	I_{TSM} 45°C 10 ms A	V_{T0} V	r_T mΩ	T_{VJM} °C	R_{thJC} K/W	R_{thCH} K/W	Fig. No.	Package style Outline drawings on pages O-31...O-54
MCC 19-08io1B	800	18	85	40	400	0.85	18	125	1.30	0.2	X125a	
MCC 19-12io1B	1200											
MCC 19-14io1B	1400											
MCC 19-16io1B	1600											
MCC 19-08io8B	800	18	85	40	400	0.85	18	125	1.30	0.2	X125c	
MCC 19-12io8B	1200											
MCC 19-14io8B	1400											
MCC 19-16io8B	1600											
MCC 21-08io8B	800	21	85	33	320	0.85	15	125	1.10	0.2		
MCC 21-12io8B	1200											
MCC 21-14io8B	1400											
MCC 21-16io8B	1600											X125a **TO-240AA**
MCMA 25P1200TA	1200	25	85	40	400	0.87	13	140	1.20	0.2	X125a	
MCMA 25P1600TA	1600											
MCC 26-08io1B	800	27	85	50	520	0.85	11	125	0.88	0.2		
MCC 26-12io1B	1200											
MCC 26-14io1B	1400											
MCC 26-16io1B	1600											
MCC 26-08io8B	800	27	85	50	520	0.85	11	125	0.88	0.2	X125c	
MCC 26-12io8B	1200											
MCC 26-14io8B	1400											
MCC 26-16io8B	1600											
MCMA 35P1200TA	1200	35	85	55	520	0.87	9.8	140	0.90	0.2	X125a	
MCMA 35P1600TA	1600											
MCC 44-08io1B	800	49	85	77	1150	0.85	5.3	125	0.53	0.2		
MCC 44-12io1B	1200											
MCC 44-14io1B	1400											X125c **TO-240**
MCC 44-16io1B	1600											
MCC 44-18io1B	1800											
MCC 44-08io8B	800	49	85	77	1150	0.85	5.3	125	0.53	0.2	X125c	
MCC 44-12io8B	1200											
MCC 44-14io8B	1400											
MCC 44-16io8B	1600											
MCC 44-18io8B	1800											
MCNA 40P2200TA	2200	40	85	63	500	0.84	11.4	140	0.70	0.2	X125a	
MCMA 50P1200TA	1200	50	85	79	800	0.89	5.3	140	0.70	0.2		
MCMA 50P1600TA	1600											
MCC 56-08io1B	800	60	85	100	1500	0.85	3.7	125	0.45	0.2		
MCC 56-12io1B	1200											
MCC 56-14io1B	1400											
MCC 56-16io1B	1600											
MCC 56-18io1B	1800											
MCC 56-08io8B	800	60	85	100	1500	0.85	3.7	125	0.45	0.2	X125c	
MCC 56-12io8B	1200											
MCC 56-14io8B	1400											
MCC 56-16io8B	1600											
MCC 56-18io8B	1800											

Data according to IEC 60747 and refer to a single diode or thyristor unless otherwise stated.

Thyristor Modules, Dual

I_{TAV} = 55 - 180 A

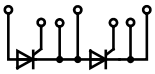

MCC...io1B
MCM/NA..P..

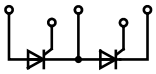

MCC...io8B

Type ➢ New	V_{RRM} V_{DRM} V	I_{TAV} A	T_C °C	$I_{T(RMS)}$ A	I_{TSM} 45°C 10 ms A	V_{T0} V	r_T mΩ	T_{VJM} °C	R_{thJC} K/W	R_{thCH} K/W	Fig. No.	Package style Outline drawings on pages O-31...O-54
➢ **MCNA 55P2200TA**	2200	55	85	86	800	0.90	9.00	140	0.50	0.20	X125a	
MCMA 65P1200TA	1200	65	85	105	1150	0.85	4.80	140	0.50	0.20		
MCMA 65P1600TA	1600											X125a **TO-240AA**
➢ **MCMA 65P1800TA**	1800											
MCC 72-08io1B	800	85	85	180	1700	0.85	3.20	125	0.30	0.20		
MCC 72-12io1B	1200											
MCC 72-14io1B	1400											
MCC 72-16io1B	1600											
MCC 72-18io1B	1800											
MCC 72-08io8B	800	85	85	180	1700	0.85	3.20	125	0.30	0.20	X125c	
MCC 72-12io8B	1200											
MCC 72-14io8B	1400											
MCC 72-16io8B	1600											
MCC 72-18io8B	1800											X125c **TO-240**
➢ **MCNA 75P2200TA**	2200	75	85	118	1050	0.90	6.50	140	0.38	0.20	X125a	
MCMA 85P1200TA	1200	85	85	135	1500	0.85	3.90	140	0.38	0.20		
MCMA 85P1600TA	1600											
➢ **MCMA 85P1800TA**	1800											
MCC 94-20io1B	2000	104	85	180	1700	0.85	3.20	125	0.22	0.20		
MCC 94-22io1B	2200											
MCC 94-24io1B	2400											
MCC 95-08io1B	800	116	85	180	2250	0.83	2.40	125	0.22	0.20		
MCC 95-12io1B	1200											
MCC 95-14io1B	1400											
MCC 95-16io1B	1600											
MCC 95-18io1B	1800											X103 **V1-A-Pack**
MCC 95-08io8B	800	116	85	180	2250	0.85	2.40	125	0.22	0.20	X125c	
MCC 95-12io8B	1200											
MCC 95-14io8B	1400											
MCC 95-16io8B	1600											
MCC 95-18io8B	1800											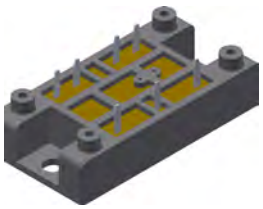
➢ **MCNA 95P2200TA**	2200	95	85	149	1400	0.90	5.00	140	0.30	0.20	X125a	
MCMA 110P1200TA	1200	110	85	170	1900	0.85	3.30	140	0.30	0.20		
MCMA 110P1600TA	1600											
➢ **MCMA 110P1800TA**	1800											
➢ **MCMA 110P1600VA**	1600										X103	
MCNA 120P2200TA	2200	120	85	190	1700	0.90	3.70	140	0.22	0.20	X125a	
MCMA 140P1200TA	1200	140	85	220	2400	0.85	2.80	140	0.22	0.20		X126a **Y4**
MCMA 140P1400TA	1400											
MCMA 140P1600TA	1600											
MCMA 140P1800TA	1800											
MCC 132-08io1	800	130	85	300	4750	0.80	1.50	125	0.23	0.10	X126a	
MCC 132-12io1	1200											
MCC 132-14io1	1400											
MCC 132-16io1	1600											
MCC 132-18io1	1800											

Data according to IEC 60747 and refer to a single diode or thyristor unless otherwise stated.

Thyristor Modules, Dual

I_{TAV} = 200 - 700 A

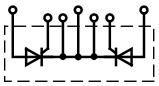

MCK...

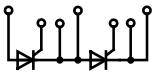

MCC...io1B
MCM/NA..P..

Type ➢ New	V_{RRM} V_{DRM} V	I_{TAV} A	T_C °C	$I_{T(RMS)}$ A	I_{TSM} 45°C 10 ms A	V_{T0} V	r_T mΩ	T_{VJM} °C	R_{thJC} K/W	R_{thCH} K/W	Fig. No.
➢ **MCNA 150P2200YA**	2200	150	85	235	4300	0.86	2.10	140	0.21	0.11	X126a
MCC 161-20io1	2000	165	85	300	6000	0.80	1.60	125	0.155	0.07	
MCC 161-22io1	2200										
MCC 162-08io1	800	181	85	300	6000	0.88	1.15	125	0.155	0.07	
MCC 162-12io1	1200										
MCC 162-14io1	1400										
MCC 162-16io1	1600										
MCC 162-18io1	1800										
➢ **MCNA 180P2200YA**	2200	180	85	280	5400	0.85	1.80	140	0.170	0.09	
MCMA 200P1600SA	1600	200	90	314	6000	0.81	1.60	140	0.150	0.08	X141a
MCC 200-14io1	1400	216	85	340	8000	0.80	1.40	125	0.130	0.05	X126a
MCC 200-16io1	1600										
MCC 200-18io1	1800										
MCK 200-18io1	1800	216	85	340	8000	0.80	1.40	125	0.130	0.05	
➢ **MCNA 220P2200YA**	2200	220	85	345	7200	0.84	1.50	140	0.130	0.07	
MCC 224-20io1	2000	240	85	400	8000	0.80	0.76	130	0.139	0.04	X131a
MCC 224-22io1	2200										
MCC 224-24io1	2400										
MCC 225-12io1	1200	221	85	400	8000	0.80	0.76	130	0.157	0.04	
MCC 225-14io1	1400										
MCC 225-16io1	1600										
MCC 225-18io1	1800										
➢ **MCNA 250P2200PTSF**	2200	250	85	400	5900	0.76	2.20	150	0.10	0.05	X143a
MCC 255-12io1	1200	250	85	450	9000	0.80	0.68	130	0.14	0.04	X131a
MCC 255-14io1	1400										
MCC 255-16io1	1600										
MCC 255-18io1	1800										
MCMA 260P1600YA	1600	260	85	408	8300	0.81	1.23	140	0.13	0.08	X126a
➢ **MCMA 260P1800YA**	1800										
MCMA 265P1600KA	1600	260	85	408	8500	0.80	0.75	140	0.16	0.04	X131a
➢ **MCMA 265P1800KA**	1800										
➢ **MCMA 280P1600PTSF**	1600	280	85	440	7000	0.83	1.57	150	0.10	0.05	X143a
MCC 310-08io1	800	320	85	500	9200	0.80	0.82	140	0.112	0.04	X129a
MCC 310-12io1	1200										
MCC 310-14io1	1400										
MCC 310-16io1	1600										
MCC 310-18io1	1800										
MCC 312-12io1	1200	320	85	520	9200	0.80	0.68	140	0.12	0.04	X131a
MCC 312-14io1	1400										
MCC 312-16io1	1600										
MCC 312-18io1	1800										
➢ **MCNA 360P2200PTSF**	2200	360	85	570	8400	0.74	1.57	150	0.07	0.04	X143a
➢ **MCMA 400P1600PTSF**	1600	400	85	630	10000	0.82	1.14	150	0.07	0.04	
➢ **MCNA 500P2200PTSF**	2200	500	85	790	11000	0.75	1.11	150	0.05	0.03	
➢ **MCMA 550P1600PTSF**	1600	550	85	860	13000	0.82	0.80	150	0.05	0.03	
➢ **MCNA 650P2200CA**	2200	650	85	1020	16000	0.75	0.63	140	0.045	0.02	X142a
MCMA 700P1600CA	1600	700	85	1100	19000	0.82	0.40	140	0.05	0.02	
➢ **MCMA 700P1800CA**	1800										
➢ **MCMA 700P1600NCA**	1600	700	85	1200	19000	0.82	0.40	140	0.05	0.02	
➢ **MCMA 700P1800NCA**	1800										

Package style
Outline drawings on pages O-31...O-54

X126a **Y4**

X129a **Y2**

X131a **Y1**

X141a **SimBus A**

X142a **ComPack**

X143a **SimBus F PFP**

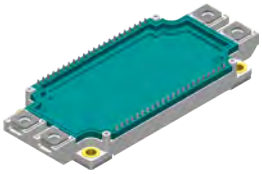

See data sheet for pin arrangement

For more dual thyristor modules with higher current, please see pages 145 and 151

Data according to IEC 60747 and refer to a single diode or thyristor unless otherwise stated.

Thyristor Modules, Single

I_{TAV} = 32 - 600 A

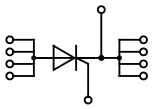

VCO...

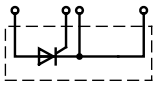

MCO

Type ➢ New	V_{RRM} V_{DRM} V	I_{TAV} A	T_C °C	$I_{T(RMS)}$ A	I_{TSM} 45°C 10 ms A	V_{T0} V	r_T mΩ	T_{VJM} °C	R_{thJC} K/W	R_{thCH} K/W	Fig. No.	Package style Outline drawings on pages O-31...O-54
MCO 25-12io1	1200	32	80	50	370	0.86	13.90	150	1.100	0.30	X027a	
MCO 25-16io1	1600											
MCO 50-12io1	1200	57	80	90	740	0.88	6.00	150	0.720	0.20		
MCO 50-16io1	1600											
MCO 75-12io1	1200	80	80	125	1070	0.85	5.50	150	0.450	0.10		X027a **SOT-227B miniBLOC**
MCO 75-16io1	1600											
MCO 100-12io1	1200	101	80	160	1400	0.85	4.50	150	0.350	0.10		
MCO 100-16io1	1600											
MCO 150-12io1	1200	158	80	250	2000	0.84	3.50	150	0.200	0.10		
MCO 150-16io1	1600											
MCO 450-20io1	2000	464	85	750	15000	0.77	0.42	130	0.072	0.02	X132a	
MCO 450-22io1	2200											
MCO 500-12io1	1200	560	85	880	17000	0.80	0.38	140	0.072	0.02		
MCO 500-14io1	1400											
MCO 500-16io1	1600											
MCO 500-18io1	1800											
MCO 600-16io1	1600	600	85	940	15000	0.81	0.40	140	0.065	0.02		
MCO 600-18io1	1800											
MCO 600-20io1	2000											X102 **ECO-PAC 2**
MCO 600-22io1	2200											
VCO 132-12io7	1200	130	85	200	3600	0.80	1.65	150	0.250	0.10	X102	
VCO 132-16io7	1600											
VCO 180-12io7	1200	180	90	280	4500	0.75	1.23	150	0.170	0.06		
VCO 180-16io7	1600											

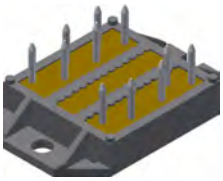

See data sheet for pin arrangement

For more single thyristor modules with higher current, please see page 137.

X132a **Y1**

Data according to IEC 60747 and refer to a single diode or thyristor unless otherwise stated.

Optional Accessories for Thyristor / Diode Modules

For module types MCC/MCD/MCO/MCMA/MCNA 132, 161 up to 700 (for MCD/MCO only L-type):
Keyed Gate Cathode twin plugs
with wire length = 350 / 480 mm
gate = white, cathode = red

Type **ZY 180 L** (L = Left for pin pair 4/5)
Type **ZY 180 R** (R = Right for pin pair 6/7)

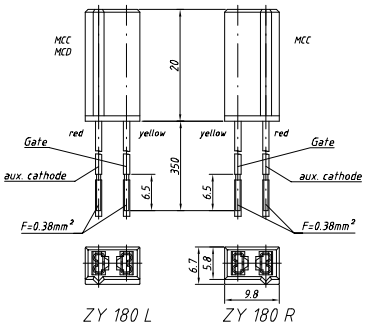

For module-type TO-240 package MCC/MCD/MCMA/MCNA 19 up to120 and 140 (version 1):
Keyed Gate Cathode twin plugs with wire length = 340 / 460 mm;
gate = white, cathode = red

Type **ZY 200 L** (L = Left for pin pair 4/5)
Type **ZY 200 R** (R = Right for pin pair 6/7)

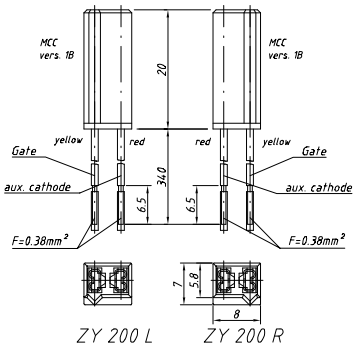

For ZY 180 and ZY 200: UL 758 Style 3751

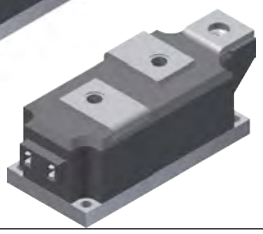

For module types MCC/MCD/MDD 310
Threaded spacer for higher Anode / Cathode construction:

Type **ZY 250** (material brass)

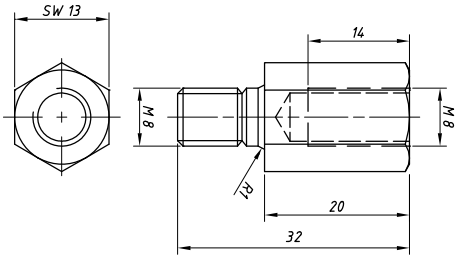

Design Information

For Thyristors, Diodes, Thyristor / Diode Modules and Rectifier Bridges

Surge current

The 60 Hz value of I_{TSM} is 10% higher than the 50 Hz value
The I_{TSM} value at T_{VJM} is 10% to 15% lower than the 45°C value

Limiting I^2t

50 Hz: I^2t [A^2s] = I_{TSM} [A] • I_{TSM} [A] • 0.005 [s]; use rated I_{TSM} value (10 ms)
60 Hz: I^2t [A^2s] = I_{TSM} [A] • I_{TSM} [A] • 0.0042 [s]; use 60-Hz-value of I_{TSM}

Forward current

The average current ratings in tables are mostly specified for temperature conditions of: T_A = 45°C, T_C = 85°C or T_C = 100°C.
For other temperature conditions the current ratings can be calculated using the following formulas applicable up to 400 Hz.

$$I_{TAV} = \frac{-V_{T0} + \sqrt{V^2_{T0} + 4 \cdot k^2 \cdot r_T \cdot P}}{2 \cdot k^2 \cdot r_T} \quad \text{where} \quad P = \frac{T_{VJM} - T_C}{R_{thJC}} \quad \text{or} \quad P = \frac{T_{VJM} - T_A}{R_{thJA}}$$

I_{TAV} [A], P [W]; V_{T0} [V]; r_T [Ω], T_{VJM} [°C], T_C [°C], T_A [°C], R_{thJC} [K/W], R_{thJA} [K/W]

k^2 = 1 for DC current
k^2 = 2.5 for sinusoidal half wave current
k^2 = 3 for 120° rectangular current
k^2 = 6 for 60° rectangular current

The average forward current is limited by the RMS current value $I_{T(RMS)}$.
When the **calculated** value I_{TAV} is higher than $I_{T(RMS)}$ / k, replace it by I_{TAV} = $I_{T(RMS)}$ / k.

Data according to IEC 60747 and refer to a single diode or thyristor unless otherwise stated.

Rectifier Bridges with Fast Diodes

1-phase, B2U

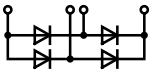

Type ✧ under development ➢ New	V_{RRM} V	I_{dAV} A	@ T_C °C	I_{FSM} 45°C 10 ms A	V_{F0} V	r_F mΩ	T_{VJM} °C	R_{thJC} K/W	R_{thCH} K/W	Fig. No.
VBE 17-06NO7	600	27	85	50	1.18	22.0	150	2.50	0.30	X101
VBE 17-12NO7	1200	19	85	40	1.32	30.0	150	2.50	0.30	
VBE 20-20NO1	2000	20	65	75	3.30	93.0	150	1.70	0.30	X103
VBE 26-06NO7	600	44	85	110	1.13	13.0	150	1.60	0.30	X101
VBE 26-12NO7	1200	32	85	90	1.32	30.0	150	1.60	0.30	
VBE 55-06NO7	600	68	100	250	0.98	8.0	150	0.90	0.30	
VBE 55-12NO7	1200	59	85	200	1.31	15.0	150	0.90	0.30	
VBE 60-06A	600	60	100	250	0.98	8.2	150	1.15	0.10	X027a
VBE 60-12A	1200	60	70	200	1.31	14.0	150	1.15	0.10	
➢ **DHG 40B1200LB**	1200	34	80	150	1.35	42	175	1.50	0.50	X030a
➢ **DHG 50B1200LB**	1200	45	80	200	1.45	26	175	1.10	0.40	
➢ **DPG 60B600LB**	600	60	100	250	0.85	17.0	175	1.10	0.40	
FBE 22-06N1	600	22	115	50	1.04	24.0	175	3.00	0.20	X024a
VBE 100-06NO7	600	100	85	600	1.09	4.3	150	0.80	0.20	X102
VBE 100-12NO7	1200	100	70	500	1.07	8.2	150	0.80	0.20	
➢ **DCG 20B650LB ***	650	21	80	250	0.74	118	175	2.10	0.70	X030a
✧ **DCG 20B1200LB ***	1200	18	80	60	0.68	133	175	3.30	0.85	
FBS 10-12SC *	1200	9	80	100	-	-	175	7.00	3.50	X024a

* SiC-Diodes

Package style

Outline drawings on pages O-31...O-54

X024a **ISOPLUS i4-PAC™**

X027a **SOT-227B miniBLOC**

X030a **SMPD-B**

X101 **ECO-PAC 1**

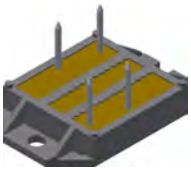

See data sheet for pin arrangement

3-phase, B6U

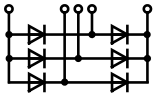

FUS 45-0045B	45	45	130	150	0.30	14.8	150	3.00	0.20	X024a
➢ **DHG 60U1200LB**	1200	60	80	200	1.35	2.90	150	1.20	0.40	X030a
VUE 50-12NO1	1200	50	85	200	1.65	18.2	150	1.20	0.30	X103
VUE 30-20NO1	2000	30	65	75	3.30	93.0	150	1.70	0.30	
VUE 22-06NO7	600	34	85	50	1.18	22.0	150	2.50	0.30	X101
VUE 22-12NO7	1200	24	85	40	1.39	55.0	150	2.50	0.30	
VUE 35-06NO7	600	56	85	110	1.13	13.0	150	1.60	0.30	
VUE 35-12NO7	1200	40	85	90	1.32	30.0	150	1.60	0.30	
VUE 75-06NO7	600	86	100	250	0.98	8.0	150	0.90	0.30	
VUE 75-12NO7	1200	74	85	200	1.31	15.0	150	0.90	0.30	
FUE 30-12N1	1200	30	120	90	0.97	48.0	175	2.30	0.20	X024a
VUE 130-06NO7	600	130	85	600	1.09	4.3	150	0.80	0.20	X102
VUE 130-12NO7	1200	130	70	500	1.07	8.2	150	0.80	0.20	

X102 **ECO-PAC 2**

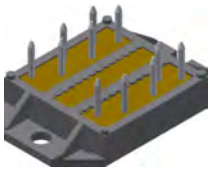

See data sheet for pin arrangement

X103 **V1-A-Pack**

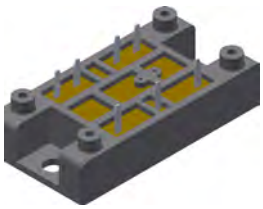

Rectifier Bridges incorporating Fast Diodes

Power switching semiconductors are used in inverter systems with DC-Link. Due to high switching frequencies, harmonics and line distortion may be generated. It is important that the new designs reduce these influences and fulfill the EMI filtering requirements according to EMI/EMC VDE 0871 and other.

The noise level can be reduced by up to **10dB** when the input rectifier is equipped with semi-fast diodes and is therefore optimised for turn off; resulting in a lower peak recovery current compared to non-optimised and normal rectifier diodes.

The noise level can be further reduced approximetely by another **5dB** when using rectifier bridges equipped with Fast Recovery Epitaxial Diodes (FRED) like module types VBE (single phase bridge) or VUE (three phase bridge). However these are more expensive but may be necessary in some applications to fulfill the VDE or other standards.

This behaviour has a direct influence on the design of the EMI filter networks with its capacitors and inductors of which the size and costs can be reduced.

More detailed information is available in the IXYS application note D98005E „Input Rectifiers with Semi-fast Diodes for DC Link“ on www.ixys.com.

Data according to IEC 60747 and refer to a single diode or thyristor unless otherwise stated.

1~ Rectifier Bridges

1~ Rectifier Bridges with Avalanche Diodes, B2U

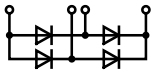

Type	V_{RRM} V	V_{vRMS} V	I_{dAV} A	@ T_C °C	I_{FSM} 45°C 10 ms A	V_{F0} V	r_F mΩ	T_{VJM} °C	R_{thJC} K/W	R_{thJH} K/W	P_{RSM} kW	Fig. No.
VBO 13-12AO2	1200	400	18	85	220	0.85	17.0	150	5.60	6.00	2.5	X115
VBO 13-16AO2	1600	500										
VBO 20-12AO2	1200	400	31	85	300	0.85	14.0	150	3.00	3.40	3.4	
VBO 20-16AO2	1600	500										
VBO 25-12AO2	1200	400	38	85	370	0.85	8.0	150	2.80	3.20	3.4	
VBO 25-16AO2	1600	500										

1~ Rectifier Bridges with Standard Diodes, B2U

VBO 13-08NO2	800	250	18	85	220	0.85	17.0	150	5.60	6.00	-	X115
VBO 13-12NO2	1200	400										
VBO 13-16NO2	1600	500										
FBO 16-12N	1200	400	20	130	150	0.81	32.0	175	3.00	3.20	-	X024a
VBO 20-08NO2	800	250	31	85	300	0.85	14.0	150	3.00	3.40	-	X115
VBO 20-12NO2	1200	400										
VBO 20-16NO2	1600	500										
VBO 21-08NO7	800	250	20	115	120	0.84	28.8	150	2.50	2.90	-	X101
VBO 21-12NO7	1200	400										
VBO 22-08NO8	800	250	14	85	380	0.77	14.2	150	8.00	9.00	-	X116b
VBO 22-12NO8	1200	400										
VBO 22-16NO8	1600	500										
VBO 22-18NO8	1800	575										
GBO 25-12NO1	1200	400	25	105	370	0.74	16.3	175	4.30	4.80	-	X025a
GBO 25-16NO1	1600	500										
VBO 25-08NO2	800	250	38	85	370	0.85	8.0	150	2.80	3.20	-	X115
VBO 25-12NO2	1200	400										
VBO 25-16NO2	1600	500										
VBO 30-08NO7	800	250	25	85	400	0.80	12.9	150	4.70	4.80	-	X119b
VBO 30-12NO7	1200	400										
VBO 30-16NO7	1600	500										
VBO 30-18NO7	1800	575										
VBO 36-08NO8	800	250	18	85	550	0.76	9.1	150	7.00	8.00	-	X116b
VBO 36-12NO8	1200	400										
VBO 36-16NO8	1600	500										
VBO 36-18NO8	1800	575										
FBO 40-12N	1200	400	40	130	300	0.79	14.0	175	1.50	1.70	-	X024a
VBO 40-08NO6	800	250	40	115	320	0.81	12.1	150	1.30	1.40	-	X027a
VBO 40-12NO6	1200	400										
VBO 40-16NO6	1600	500										
VBO 50-08NO7	800	250	45	85	750	0.76	6.9	150	2.70	3.10	-	X120b
VBO 50-12NO7	1200	400										
VBO 50-16NO7	1600	500										
VBO 50-18NO7	1800	575										
VBO 52-08NO7	800	250	60	115	550	0.78	8.1	150	1.10	1.50	-	X122b
VBO 52-12NO7	1200	400										
VBO 52-16NO7	1600	500										
VBO 52-18NO7	1800	575										
VBO 54-08NO7	800	250	55	105	300	0.82	12.2	150	1.10	1.50	-	X101
VBO 54-12NO7	1200	400										
VBO 54-16NO7	1600	500										
VBO 68-08NO7	800	250	70	105	550	0.81	7.8	150	0.90	1.30	-	X101
VBO 68-12NO7	1200	400										
VBO 68-16NO7	1600	500										
VBO 72-08NO7	800	250	70	110	750	0.78	6.0	150	0.90	1.30	-	X122b
VBO 72-12NO7	1200	400										
VBO 72-16NO7	1600	500										
VBO 72-18NO7	1800	575										

Package style

Outline drawings on pages O-31...O-54

X024a **ISOPLUS i4-PAC™**

X025a **GBFP**

X027a **SOT-227B miniBLOC**

X101 **ECO-PAC 1**

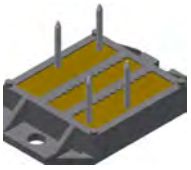

See data sheet for pin arrangement

X115 FO-A

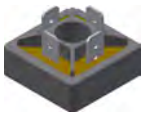

X116b FO-B

X119b **PWS-A**

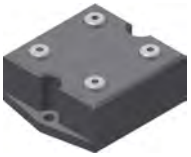

X120b **PWS-B**

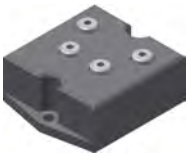

X122b **PWS-D**

Data according to IEC 60747 and refer to a single diode or thyristor unless otherwise stated.

1~ Rectifier Bridges

1~ Rectifier Bridges with Standard Diodes, B2U

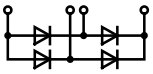

Type ➢ New	V_{RRM} V	V_{vRMS} V	I_{dAV} A	@ T_C °C	I_{FSM} 45°C 10 ms A	V_{F0} V	r_F mΩ	T_{VJM} °C	R_{thJC} K/W	R_{thJH} K/W	Fig. No.
VBO 78-08NO7	800	250	80	115	750	0.81	5.9	150	0.70	1.00	X102
VBO 78-12NO7	1200	400									
VBO 78-16NO7	1600	500									
VBO 88-08NO7	800	250	90	115	1000	0.80	4.6	150	0.60	0.90	
VBO 88-12NO7	1200	400									
VBO 88-16NO7	1600	500									
➢ **DLA 100B800LB**	800	400	124	80	400	0.75	4.2	175	1.00	1.45	X030a
➢ **DLA 100B1200LB**	1200										
VBO 105-08NO7	800	250	100	100	1500	0.78	4.8	150	0.80	1.10	X121b
VBO 105-12NO7	1200	400									
VBO 105-16NO7	1600	500									
VBO 125-08NO7	800	250	125	105	1800	0.76	3.6	150	0.60	0.90	
VBO 125-12NO7	1200	400									
VBO 125-16NO7	1600	500									
VBO 130-08NO7	800	250	130	110	1800	0.77	3.4	150	0.50	0.70	X123e
VBO 130-12NO7	1200	400									
VBO 130-16NO7	1600	500									
VBO 130-18NO7	1800	575									
VBO 160-08NO7	800	250	160	110	2800	0.74	2.4	150	0.40	0.55	
VBO 160-12NO7	1200	400									
VBO 160-16NO7	1600	500									
VBO 160-18NO7	1800	575									

Package style

Outline drawings on pages O-31...O-54

X030a **SMPD-B**

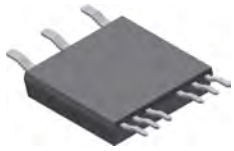

X101 **ECO-PAC 1**

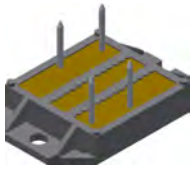

See data sheet for pin arrangement

X102 **ECO-PAC 2**

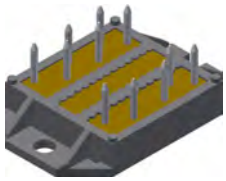

See data sheet for pin arrangement

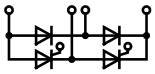

VGO

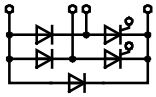

VHF

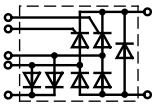

VHFD

X103 **V1-A-Pack**

X117a **FO-F-A**

X121b **PWS-C**

X123e **PWS-E**

Type	V_{RRM} V	V_{vRMS} V	I_{dAV} A	@ T_H °C	I_{TSM} 10 ms, 45°C A	V_{T0} V	r_T mΩ	T_{VJM} °C	R_{thJC} K/W	R_{thJH} K/W	Fig. No.

1~ Half Controlled Rectifier Bridges with free wheeling diode, B2HKF

VHF 15-08io5	800	250	15	85	190	1.00	40.0	125	2.40	3.00	X117a
VHF 15-12io5	1200	400									
VHF 15-14io5	1400	440									
VHF 15-16io5	1600	500									
VHF 25-08io7	800	250	32	T_C = 85°C	200	0.85	27.0	125	1.30	1.80	X101
VHF 25-12io7	1200	400									
VHF 28-08io5	800	250	28	85	300	0.90	15.0	125	1.40	2.00	X117a
VHF 28-12io5	1200	400									
VHF 28-14io5	1400	440									
VHF 28-16io5	1600	500									
VHF 36-08io5	800	250	36	85	320	0.85	13.0	125	1.15	1.55	
VHF 36-12io5	1200	400									
VHF 36-14io5	1400	440									
VHF 36-16io5	1600	500									
VHFD 16-08io1	800	250	16	85	150	1.00	40.0	125	2.40	3.00	X103
VHFD 16-12io1	1200	400									
VHFD 16-16io1	1600	500									
VHFD 29-08io1	800	250	28	85	300	0.90	15.0	125	1.40	2.00	
VHFD 29-12io1	1200	400									
VHFD 29-16io1	1600	500									
VHFD 37-08io1	800	250	36	85	320	0.85	13.0	125	1.20	1.55	
VHFD 37-12io1	1200	400									
VHFD 37-16io1	1600	500									

1~ Half Controlled Rectifier Bridge, B2HZ

VGO 36-16io7	1600	500	36	85	320	0.85	13.0	125	1.40	2.00	X101

Data according to IEC 60747 and refer to a single diode or thyristor unless otherwise stated.

3~ Rectifier Bridges

3~ Rectifier Bridges with Standard Diodes, B6U

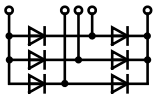

Type ○ Not for new design ➢ New	V_{RRM} V	V_{vRMS} V	I_{dAV} A	@ T_C °C	I_{FSM} 45°C 10 ms A	V_{F0} V	r_F mΩ	T_{VJM} °C	R_{thJC} K/W	R_{thJH} K/W	Fig. No.	Package style Outline drawings on pages O-31...O-54
FUO 22-12N	1200	400	30	120	150	0.81	31.0	175	3.00	3.20	X024a	X024a **ISOPLUS i4-PAC™**
FUO 22-16N	1600	500										
VUO 25-08NO8	800	250	20	85	380	0.77	14.2	150	8.00	9.00	X116a	
VUO 25-12NO8	1200	400										
VUO 25-14NO8	1400	440										
VUO 25-16NO8	1600	500										
VUO 25-18NO8	1800	575										X025b **GUFP**
VUO 28-08NO7	800	250	30	105	120	0.84	28.8	150	2.50	2.90	X101	
VUO 28-12NO7	1200	400										
VUO 36-08NO8	800	250	27	85	550	0.76	9.1	150	7.00	8.00	X116a	
VUO 36-12NO8	1200	400										
VUO 36-14NO8	1400	440										
VUO 36-16NO8	1600	500										X101 **ECO-PAC 1**
VUO 36-18NO8	1800	575										
VUO 34-08NO1	800	250	45	110	300	0.81	14.9	150	1.70	2.10	X103	
VUO 34-12NO1	1200	400										
VUO 34-14NO1	1400	440										
VUO 34-16NO1	1600	500										
VUO 34-18NO1	1800	575										See data sheet for pin arrangement
VUO 30-08NO3	800	250	45	110	300	0.80	12.9	150	2.00	2.40	X117b	
VUO 30-12NO3	1200	400										X103 **V1-A-Pack**
VUO 30-14NO3	1400	440										
VUO 30-16NO3	1600	500										
VUO 30-18NO3	1800	575										
VUO 35-08NO7	800	250	35	85	400	0.80	12.9	150	4.20	4.80	X119a	
VUO 35-12NO7	1200	400										
VUO 35-14NO7	1400	440										
VUO 35-16NO7	1600	500										X116a **FO-B**
VUO 35-18NO7	1800	575										
GUO 40-08NO1	800	250	40	90	370	0.74	16.3	175	4.30	4.80	X025b	
GUO 40-12NO1	1200	400										
GUO 40-16NO1	1600	500										
➢ **DMA 40U1800GU**	1800	575										X117b **FO-F-B**
➢ **DNA 40U2200GU**	2200	690										
FUO 50-16N	1600	500	50	120	270	0.78	17	175	2.10	2.30	X024a	
VUO 52-08NO1	800	250	60	110	350	0.83	11.5	150	1.30	1.60	X103	
VUO 52-12NO1	1200	400										
VUO 52-14NO1	1400	440										
VUO 52-16NO1	1600	500										
VUO 52-18NO1	1800	500										X119a **PWS-A**
VUO 52-20NO1	2000	575										
VUO 52-22NO1	2200	690										
VUO 50-08NO3	800	250	60	110	500	0.78	8.5	150	1.50	1.90	X117b	
VUO 50-12NO3	1200	400										
VUO 50-14NO3	1400	440										
VUO 50-16NO3	1600	500										
VUO 50-18NO3	1800	575										X120a **PWS-B**
VUO 55-12NO7	1200	400	60	85	750	0.76	6.9	150	2.70	3.10	X120a	
VUO 55-14NO7	1400	440										
VUO 55-16NO7	1600	500										
VUO 55-18NO7	1800	575										

Data according to IEC 60747 and refer to a single diode or thyristor unless otherwise stated.

3~ Rectifier Bridges

3~ Rectifier Bridges with Standard Diodes, B6U

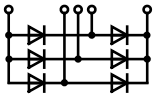

Type ○ Not for new design ➢ New	V_{RRM} V	V_{vRMS} V	I_{dAV} A	@ T_C °C	I_{FSM} 45°C 10 ms A	V_{F0} V	r_F mΩ	T_{VJM} °C	R_{thJC} K/W	R_{thJH} K/W	Fig. No.	Package style Outline drawings on pages O-31...O-54
VUO 60-12NO3	800	250	75	110	700	0.77	6.5	150	1.20	1.60	X117b	X030a **SMPD-B**
VUO 60-14NO3	1400	440										
VUO 60-16NO3	1600	500										
VUO 60-18NO3	1800	575										
VUO 62-08NO7	800	250	60	120	550	0.78	8.1	150	1.10	1.50	X122a	X101 **ECO-PAC 1**
VUO 62-12NO7	1200	400										
VUO 62-14NO7	1400	440										
VUO 62-16NO7	1600	500										
VUO 62-18NO7	1800	575										See data sheet for pin arrangement
VUO 64-16NO7	1600	500	60	120	550	0.78	8.1	150	1.10	1.50	X122c	X102 **ECO-PAC 2**
VUO 68-08NO7	800	250	70	105	300	0.82	12.2	150	1.10	1.50	X101	
VUO 68-12NO7	1200	400										
VUO 68-14NO7	1400	440										
VUO 68-16NO7	1600	500										See data sheet for pin arrangement
○ **VUO 70-16NO7**	1600	500	70	100	550	0.80	8.0	150	1.45	1.90	X118d	X103 **V1-A-Pack**
VUO 80-08NO1	800	250	80	110	600	0.81	7.8	150	1.10	1.40	X103	
VUO 80-12NO1	1200	400										
VUO 80-14NO1	1400	440										
VUO 80-16NO1	1600	500										X117b **FO-F-B**
VUO 80-18NO1	1800	575										
VUO 82-08NO7	800	250	90	115	750	0.78	6.0	150	0.90	1.30	X122a	
VUO 82-12NO7	1200	400										
VUO 82-14NO7	1400	440										
VUO 82-16NO7	1600	500										X118d **FO-T-A**
VUO 82-18NO7	1800	575										
VUO 84-16NO7	1600	500	90	115	750	0.78	6.0	150	0.90	1.30	X122c	
VUO 86-08NO7	600	125	90	105	550	0.81	7.8	150	0.90	1.30	X101	
VUO 86-12NO7	1200	400										X121a **PWS-C**
VUO 86-14NO7	1400	440										
VUO 86-16NO7	1600	500										
➢ **DMA 90U1800LB**	1800	575	90	110	350	0.81	12.7	175	1.10	1.50	X030a	
DNA 90U2200LB	2200	690										X122a **PWS-D**
VUO 98-08NO7	800	250	105	115	750	0.81	5.9	150	0.70	1.00	X102	
VUO 98-12NO7	1200	400										
VUO 98-14NO7	1400	440										
VUO 98-16NO7	1600	500										
VUO 105-12NO7	1200	400	120	105	1500	0.78	4.8	150	0.80	1.10	X121a	X122c **PWS-D Flat**
VUO 105-14NO7	1400	440										
VUO 105-16NO7	1600	500										
VUO 105-18NO7	1800	575										

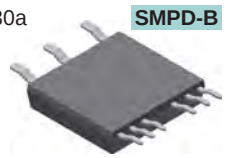
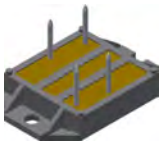
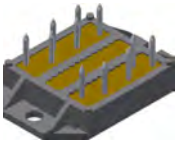

Data according to IEC 60747 and refer to a single diode or thyristor unless otherwise stated.

3~ Rectifier Bridges

3~ Rectifier Bridges with Standard Diodes, B6U

DM/NA...YA...

DM/NA...YC...

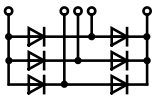
VUO.. DM/NA..U.. MDM/NA..U..

Type ○ Not for new design ➢ New	V_{RRM} V	V_{vRMS} V	I_{dAV} A	@ T_C °C	I_{FSM} 45°C 10 ms A	V_{F0} V	r_F mΩ	T_{VJM} °C	R_{thJC} K/W	R_{thJH} K/W	Fig. No.	Package style Outline drawings on pages O-31...O-54
VUO 110-08NO7	800	250	125	110	1200	0.79	4.5	150	0.70	1.00	X123c	X027a **SOT-227B miniBLOC**
VUO 110-12NO7	1200	400										
VUO 110-14NO7	1400	440										
VUO 110-16NO7	1600	500										
VUO 110-18NO7	1800	575										
VUO 120-12NO2T	1200	400	180	90	1100	0.81	4.4	150	0.60	0.80	X104	
VUO 120-16NO2T	1600	500										
VUO 121-16NO1	1600	500	120	105	700	0.80	7.6	150	0.65	0.75	X112	
VUO 122-08NO7	800	250	125	115	1000	0.80	4.6	150	0.60	0.90	X102	
VUO 122-12NO7	1200	400										X102 **ECO-PAC 2**
VUO 122-14NO7	1400	440										
VUO 122-16NO7	1600	500										
VUO 125-12NO7	1200	400	150	110	1800	0.76	3.6	150	0.60	0.90	X121a	
VUO 125-14NO7	1400	440										
VUO 125-16NO7	1600	500										See data sheet for pin arrangement
VUO 125-18NO7	1800	575										
➢ **DNA 90YA2200NA**	2200	690	90	85	370	0.86	11.4	150	1.20	1.30	X027a	
➢ **DNA 90YC2200NA**												
DMA 150YA1600NA	1600	500	150	95	700	0.82	6.3	150	0.60	0.70		X104 **V2-Pack**
DMA 150YC1600NA												
VUO 160-08NO7	800	250	175	110	1800	0.77	3.4	150	0.50	0.70	X123c	
VUO 160-12NO7	1200	400										
VUO 160-14NO7	1400	440										
VUO 160-16NO7	1600	500										
VUO 160-18NO7	1800	575										
VUO 162-16NO7	1600	500	175	110	1800	0.77	3.4	150	0.50	0.70	X123h	X112 **E2-Pack**
VUO 190-08NO7	800	250	240	110	2800	0.74	2.4	150	0.40	0.55	X123c	
VUO 190-12NO7	1200	400										
VUO 190-14NO7	1400	440										
VUO 190-16NO7	1600	500										
VUO 190-18NO7	1800	575										
VUO 192-16NO7	1600	500	240	110	2800	0.74	2.4	150	0.40	0.55	X123h	
➢ **MDNA 240U2200ED**	2200	690	240	90	1500	0.79	5.1	150	0.35	0.45	X112	X113 **E3-Pack**
➢ **MDMA 450U1600PTEH**	1600	450	500	85	2400	0.82	2.7	150	0.20	0.10	X113	
➢ **MDMA 660U1600PTEH**	1600	500	660	85	5000	0.77	1.8	150	0.15	0.075		
➢ **MDNA 660U2200PTEH**	2200	690										
➢ **MDMA 900U1600PTEH**	1600	500	900	85	8000	0.76	1.4	150	0.10	0.05		

X123h **PWS-E Flat**

X123c **PWS-E**

X121a **PWS-C**

Data according to IEC 60747 and refer to a single diode or thyristor unless otherwise stated.

3~ Rectifier Bridges

3~ Rectifier Bridges
with IGBT and Fast Diode for Brake Unit

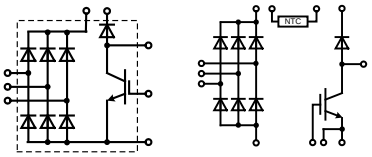

Type	Rectifier			IGBT		Fast Diode			Fig. No.	Package style Outline drawings on pages O-31...O-54
➢ New	V_{RRM} V	I_{dAV} A	@ T_C °C	V_{CES} V	I_{C80} A	V_{RRM} V	$I_{F(AV)}$ A	t_{rr} ns		
VUB 72-12NOXT	1200	75	110	1200	40	1200	21	130	X103	X027a **SOT-227B miniBLOC**
VUB 72-16NOXT	1600									
VUI 72-16NOXT	1600	75	110	1200	40	-	-	-		
VUB 116-16NOXT	1600	120	105	1200	84	1200	32	150	X112	
VUB 120-16NOX	1600	180	90	1200	140	1200	32	300	X104	
VUB 120-16NOXT										
VUB 135-22NO1	2200	150	105	1700	80	1700	33	tbd	X112	
VUB 145-16NOXT	1600	150	105	1200	140	1200	32	300		X103 **V1-A-Pack**
VUB 160-16NOX	1600	180	90	1200	175	1200	32	150	X104	
VUB 160-16NOXT										
➢ **MDMA 210UB1600PTED**	1600	210	85	1200	84	1200	59	350	X112	
➢ **MDNA 210UB2200PTED**	2200	210	85	1700	100	1700	54	550		
MDMA 240UB1600ED	1600	240	85	1200	140	1200	59	350		
➢ **MDMA 280UB1600PTED**	1600	280	85	1200	140	1200	59	350		X104 **V2-Pack**
➢ **MDNA 280UB2200PTED**	2200	280	85	1700	100	1700	54	550		
➢ **MDMA 360UB1600PTED**	1600	360	85	1200	175	1200	90	350		
➢ **MDNA 360UB2200PTED**	2200	360	85	1700	145	1700	83	550		
➢ **MDMA 450UB1600PTED**	1600	450	85	1200	175	1200	90	350		

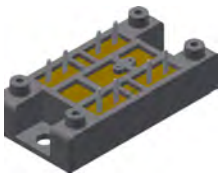

X112 **E2-Pack**

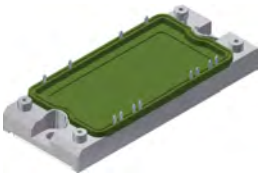

3~ Half Controlled Rectifier Bridges

with IGBT and Fast Diode for Brake Unit

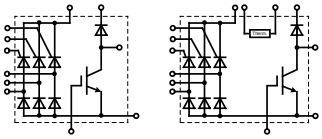

Type	Rectifier			IGBT		Fast Diode			Fig. No.
➢ New	V_{RRM} V	I_{dAV} A	@ T_C °C	V_{CES} V	I_{C80} A	V_{RRM} V	$I_{F(AV)}$ A	t_{rr} ns	
VVZB 120-16ioX	1600	180	85	1200	140	1200	32	300	X104
MCNA 120UI2200TED	2200	117	80	1700	80	1700	50	550	X112
VVZB 135-16ioXT	1600	150	85	1200	84	1200	32	150	
VVZB 170-16ioXT	1600	180	85	1200	140	1200	32	300	
MCMA 240UI1600ED	1600	240	80	1200	140	1200	59	350	
➢ **MCMA 240UI1600PED**									
➢ **MCMA 245UI1600ED**	1600	240	80	1200	175	1200	90	350	

X123c **PWS-E**

X123h **PWS-E Flat**

Data according to IEC 60747 and refer to a single diode or thyristor unless otherwise stated.

3~ Rectifier Bridges

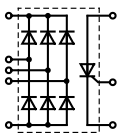
...UC...
VUC

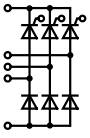
VVZ

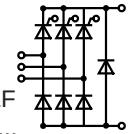
VVZF
...UJ...

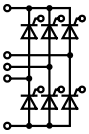
VTO

Type	V_{RRM} V	V_{vRMS} V	I_{dAVM} A	@ T_H °C		$I_{FSM/TSM}$ 10 ms, 45°C A	V_{T0} V	r_T mΩ	T_{VJM} °C	R_{thJC} K/W	R_{thJH} K/W	Fig. No.
3~ Rectifier Bridges with Fast Diodes (t_{rr} = 1.5 ms) & Integrated Softstart Thyristor												
VUC 36-12go2	1200	400	34	85	Dio.	300	1.20	16.0	125	1.40	2.00	X105a
					Thy.	400	0.85	10.0	125	0.90	1.10	
VUC 36-16go2	1600	500	34	85	Dio.	300	1.20	16.0	125	1.40	2.00	
					Thy.	400	0.85	10.0	125	0.90	1.10	
MDMA 60UC1600VC	1600	500	60	110	Dio.	350	0.83	11.5	150	1.30	1.60	X105c
					Thy.	800	0.89	5.3	140	0.70	0.90	

Package style
Outline drawings
on pages O-31...O-54

X101 **ECO-PAC 1**

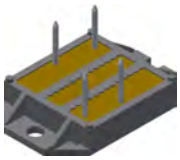

See data sheet for pin arrangement

Type	V_{RRM} V	V_{vRMS} V	I_{dAVM} A	@ T_H °C	$I_{FSM/TSM}$ 10 ms, 45°C A	V_{T0} V	r_T mΩ	T_{VJM} °C	R_{thJC} K/W	R_{thJH} K/W	Fig. No.
3~ Half Controlled Rectifier Bridges, B6HK											
VVZ 39-08ho7	800	250	39	85	200	0.85	27.0	125	1.30	1.80	X101
VVZ 39-12ho7	1200	400									
VVZ 40-12io1	1200	400	34	100	320	0.85	15.0	125	1.00	1.60	X105a
VVZ 40-16io1	1600	500									
VVZ 110-12io7	1200	400	110	85	1150	0.85	6.0	125	0.65	0.80	X123b
VVZ 175-12io7	1200	400	167	85	1500	0.85	3.5	125	0.46	0.55	
VVZ 175-16io7	1600	500									
3~ Half Controlled Rectifier Bridges with free wheeling diode, B6HKF											
MCMA 120UJ1800ED	1800	575	117	80	500	0.89	13.6	150	0.65	0.75	X112
○ **VVZF 70-16io7**	1600	500	70	85	550	0.85	11.0	125	0.90	1.10	X118c
3~ Full Controlled Rectifier Bridges, B6C											
VTO 39-08ho7	800	250	39	85	200	0.85	27.0	125	1.30	1.80	X101
VTO 39-12ho7	1200	400									

X105a **V1-B-Pack**

X105c **V1-B-Pack**

X123b **PWS-E**

X118c **FO-T-A**

X112 **E2-Pack**

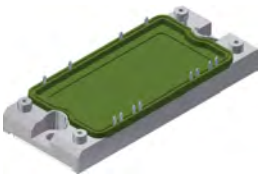

Data according to IEC 60747 and refer to a single diode or thyristor unless otherwise stated.

AC Controller 1~ / 2~ / 3~

I_{RMS} = 30 - 230 A

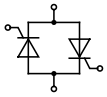
MMO/CLA..MB..

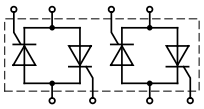
VW 2x..

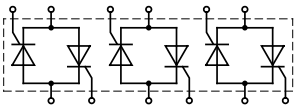
VWO

	Type ➢ New	V_{RRM} V	V_{vRMS} V	I_{RMS} A	@ T_C °C	I_{TSM} 10 ms 45°C A	V_{T0} V	r_T mΩ	T_{VJM} °C	R_{thJC} K/W	R_{thJH} K/W	Fig. No.
1~	**MMO 62-12io6**	1200	400	66	95	400	0.87	13.6	150	0.90	1.10	X027a
	MMO 62-16io6	1600	500									
	MMO 74-12io6	1200	400	88	95	600	0.87	10.5	150	0.70	0.80	
	MMO 74-16io6	1600	500									
	MMO 90-12io6	1200	400	110	95	800	0.88	6.0	150	0.60	0.70	
	MMO 90-14io6	1400	440									
	MMO 90-16io6	1600	500									
	CLA 110MB1200NA	1200	400	110	110	1100	0.78	4.9	150	0.55	0.65	
	MMO 110-12io7	1200	400	112	85	1000	0.85	5.6	150	0.80	0.92	X101
	MMO 110-14io7	1400	440									
	MMO 140-12io7	1200	400	130	85	1150	0.85	5.2	150	0.70	0.82	
	MMO 140-16io7	1600	500									
	MMO 175-12io7	1200	400	175	85	1500	0.85	3.7	150	0.50	0.62	
	MMO 175-16io7	1600	500									
	MMO 230-12io7	1200	400	230	85	2250	0.80	2.4	125	0.26	0.46	X102
	MMO 230-16io7	1600	500									
2~	**VW 2x60-12io1**	1200	400	2x 60	85	520	0.85	11.0	125	0.92	1.22	X103
	VW 2x60-14io1	1400	440									
	VW 2x60-16io1	1600	500									
3~	**VWO 35-08ho7**	800	250	3x 35	85	200	0.85	27.0	125	1.30	1.80	X101
	VWO 35-12ho7	1200	400									

Package style

Outline drawings on pages O-31...O-54

X027a **SOT-227B miniBLOC**

X101 **ECO-PAC 1**

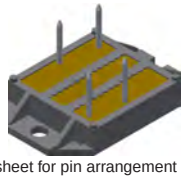

See data sheet for pin arrangement

X102 **ECO-PAC 2**

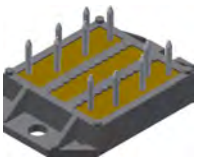

See data sheet for pin arrangement

X103 **V1-A-Pack**

X104 **V2-Pack**

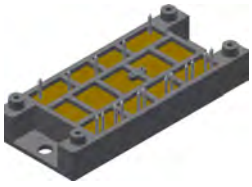

X132a **Y1-2-Cu**

X016c **ISO247™**

TRIAC 1~

I_{RMS} = 30 - 650 A

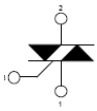
...MT...

Type	V_{RRM} V	V_{vRMS} V	I_{RMS} A	@ T_C °C	I_{TSM} 10 ms 45°C A	V_{T0} V	r_T mΩ	T_{VJM} °C	R_{thJC} K/W	R_{thJH} K/W	Fig. No.
➢ **CLA 30MT1200NPB**	1200	400	33	120	170	0.89	30.5	150	0.95	1.45	X005a
➢ **CLA 30MT1200NPZ**										1.20	X011c
➢ **CLA 40MT1200NPB**	1200	400	44	110	180	0.89	27.9	150	0.80	1.30	X005a
➢ **CLA 40MT1200NPZ**										1.05	X011c
➢ **CLA 40MT1200NHB**											X014a
➢ **CLA 40MT1200NHR**				95					1.30	1.55	X016c
CLA 60MT1200NHB	1200	400	66	120	380	0.86	12.5	150	0.55	0.80	X014a
CLA 60MT1200NTZ										0.70	X019a
CLA 60MT1200NHR				100					0.90	1.15	X016c
➢ **CMA 60MT1600NHB**	1600	500	66	115	260	0.90	16.6	150	0.55	0.80	X014a
➢ **CMA 60MT1600NHR**				90					0.90	1.15	X016c
➢ **CLA 80MT1200NHB**	1200	400	88	120	480	0.85	9.2	150	0.40	0.65	X014a
➢ **CLA 80MT1200NHR**				100					0.65	0.90	X016c
➢ **CMA 80MT1600NHB**	1600	400	88	115	400	0.90	12.0	150	0.40	0.65	X014a
➢ **CMA 80MT1600NHR**	1600	500		95					0.65	0.90	X016c
➢ **MCMA 650MT1400NKD**	1400	440	650	85	9600	0.81	0.68	140	0.12	0.04	X132a
➢ **MCMA 650MT1800NKD**	1800	575									

X005a **TO-220AB**

X011c **TO-263ABHV**

X014a **TO-247AD**

X019a **TO-268AAHV**

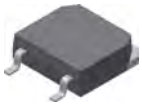

Data according to IEC 60747 and refer to a single diode or thyristor unless otherwise stated.

1~ / 3~ High Voltage Rectifier Modules

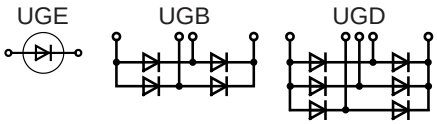

Type	V_{RRM} V	I_{dAV} ① / ② A	I_{FSM} 10 ms, 45°C A	V_{F0} V	r_F mΩ	T_{VJM} °C	R_{thJA1} ① K/W	R_{thJA2} ② K/W	Fig. No.	Package style Outline drawings on pages O-31...O-54
UGE 0421AY4	3200	23 / 7.4	300	1.70	16	150	1.9	7.1	X251	
UGE 0221AY4	4800	10 / 3.8	180	2.55	90	150	1.7	8.0		
UGE 1112AY4	8000	4.2 / 2.0	120	4.25	215	150	4.2	10.0		
UGE 3126AY4	24000	2.0 / 0.8	70	12.00	1800	150	2.7	8.7		
UGB 3132AD	4800	1.3	60	-	-	150	-	-	X252	
UGB 6124AG	10500	1.0	50	-	-	150	-	-	X253b	
UGD 6123AG	7200	1.8	50	-	-	150	-	-	X253a	
UGD 8124AG	10500	1.2	50	-	-	150	-	-		

Data according to IEC 60747-2/6

① for oil-cooling with cooling plate, T_A = 35°C
② for natural air cooling without cooling plate, T_A = 45°C

X253b **UGB**

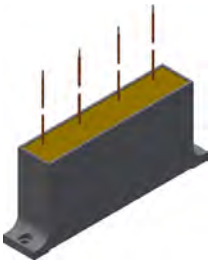

X253a **UGD**

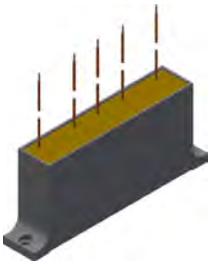

X252 **UGB**

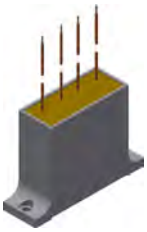

X251 **UGE**

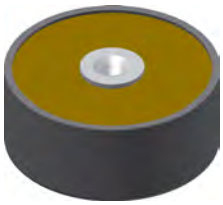

Braking Rectifier Assemblies

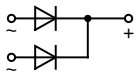

VGF 0136 AH

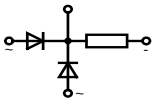

VGF 0136 AB

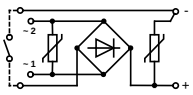

VGB 0124 AY7

Type	V_{vRMS} typ. V	V_{dAV} typ. V	I_{dAVM} typ. A	I_{dAVM} max. A	V_{RRM} max. V	I_{FSM} max. A	I^2t max. A^2s	Fig. No.	Package style Outline drawings on pages O-31...O-54
VGB 0124AY7a	380	340	1.0	1.0	1400	60	28	X254	
VGF 0136AB	1000	440	1.2	1.5	2800	80	40	X255	

X254 **VG-A**

X255 **VG-B**

Data according to IEC 60747 and refer to a single diode or thyristor unless otherwise stated.

Break-Over Diodes

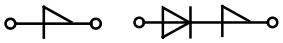

Version R Version RD

Type	V_{BO}	I_{BO}	I_H	V_H	I_D	I_{AVM} ①	I_{SM}	dv/dt	R_{thJA}	Fig. No.	Package style
	T_{VJ} = 25 °C, $K_T = 2 \cdot 10^{-3}$ K^{-1}		T_{VJ} = 25 °C		T_{VJ} = 125 °C, $V_D = 0.8 \cdot V_{BO}$	T_{amb} = 50 °C					Outline drawings on pages O-31...O-54
	V	mA	mA	V	µA	A	A	V/µs	K/W		
IXBOD 1-06	600 ±50	< 15	30	4-8	20	0.90	200	>1000	60	X201	
IXBOD 1-07	700										
IXBOD 1-08	800										
IXBOD 1-09	900										
IXBOD 1-10	1000										
IXBOD 1-12R	1200 ±50	< 15	30	4-8	100	0.90	200	>1500	20	X202	
IXBOD 1-12RD											
IXBOD 1-13R	1300										
IXBOD 1-13RD											
IXBOD 1-14R	1400										
IXBOD 1-14RD											
IXBOD 1-15R	1500										X201 **FP-Case** (oil proof)
IXBOD 1-15RD											
IXBOD 1-16R	1600										
IXBOD 1-16RD											
IXBOD 1-17R	1700										
IXBOD 1-17RD											
IXBOD 1-18R	1800										
IXBOD 1-18RD											
IXBOD 1-19R	1900										
IXBOD 1-19RD											
IXBOD 1-20R	2000										
IXBOD 1-20RD											
IXBOD 1-21R	2100 ±50	< 15	30	4-8	100	0.90	200	>2500	20		
IXBOD 1-21RD											
IXBOD 1-22R	2200										
IXBOD 1-22RD											
IXBOD 1-23R	2300										
IXBOD 1-23RD											
IXBOD 1-24R	2400										X202 **BOD-Package** 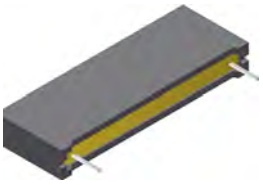
IXBOD 1-24RD											
IXBOD 1-25R	2500										
IXBOD 1-25RD											
IXBOD 1-26R	2600 ±100										
IXBOD 1-26RD											
IXBOD 1-28R	2800										
IXBOD 1-28RD											
IXBOD 1-30R	3000										
IXBOD 1-30RD											
IXBOD 1-32R	3200										
IXBOD 1-32RD											
IXBOD 1-34R	3400 ±100	< 15	30	4-8	100	0.90	200	>3500	20		
IXBOD 1-36R	3600										
IXBOD 1-38R	3800										
IXBOD 1-40R	4000										
IXBOD 1-42R	4200										

① Leads soldered on PCB board, T_{stg} and T_{VJ} = -40 ... +125°C

Break-Over-Diodes Sets

We deliver also:
- Special selection of more than 2 pcs IXBOD1-... for every break down voltage of VBO > 2000 V
- Example

type designation IXBOD Set SA05/00
VBO = 4700 V ±100 V
(we deliver 5 pcs single selected IXBOD1-... in one plastic bag)
Customers use these products on PCB connected in series with parallel resistor R = 10 MΩ
across each IXBOD

Data according to IEC 60747 and refer to a single diode or thyristor unless otherwise stated.

IXBOD 2 - Fast Break-Over Diodes

Advantages compared with IXBOD 1**:**

- Temperature coefficient K_T reduced by a factor of 3
  - tighter definition of the break-over voltage V_{BO}
    -- $V_{BO}(T_{VJ}) = V_{BO}, 25°C [1 + K_T (T_{VJ} - 25°C)]$
  - more precise and controllable design due to smaller tolerances
- Significant reduction of the switching-on time down to a few nanoseconds

Applications:

- Protection circuits for thyristors in high valuable designs
  - high DC current power transmissions for long distances like offshore windmills or hydroelectric dams
- High Intensity Discharge Lighting (HID)

Fast Break-Over Diodes

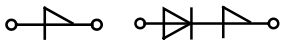

Version R Version RD

Type	V_{BO}	I_{BO}	I_H	V_H	I_D	I_{AVM} ①	I_{SM}	dv/dt	R_{thJA}	Fig. No.	Package style
	T_{VJ} = 25 °C, $K_T = 0.7 \cdot 10^{-3}$ K^{-1}		T_{VJ} = 25 °C		T_{VJ} = 125 °C, $V_D = 0.8 \cdot V_{BO}$	T_{amb} = 50 °C					Outline drawings on pages O-31...O-54
➢ New	V	mA	mA	V	µA	A	A	V/µs	K/W		
IXBOD 2-01	100	15	20	4-8	200	0.90	250	>1000	60	X201	
IXBOD 2-02	200 ±10%										
IXBOD 2-03	300 $\cdot V_{BO}$										
IXBOD 2-04	400										
IXBOD 2-05	500 ±50										
IXBOD 2-06	600										
IXBOD 2-07	700										
IXBOD 2-08	800										
IXBOD 2-09	900										X201 **FP-Case** (oil proof)
IXBOD 2-10	1000										
IXBOD 2-11	1100										
IXBOD 2-12	1200										
IXBOD 2-13	1300										
IXBOD 2-14	1400										
IXBOD 2-15R	1500 ±50	15	20	4-8	200	0.90	250	>1500	20	X202	
IXBOD 2-15RD											
IXBOD 2-16R	1600										
IXBOD 2-16RD											
IXBOD 2-17R	1700										
IXBOD 2-17RD											
IXBOD 2-18R	1800										
IXBOD 2-18RD											
IXBOD 2-19R	1900										
IXBOD 2-19RD											
IXBOD 2-20R	2000										
IXBOD 2-20RD											
IXBOD 2-21R	2100										
IXBOD 2-21RD											X202 **BOD-Package**
IXBOD 2-22R	2200										
IXBOD 2-22RD											
IXBOD 2-23R	2300										
IXBOD 2-23RD											
IXBOD 2-24R	2400										
IXBOD 2-24RD											
IXBOD 2-25R	2500										
IXBOD 2-25RD											
IXBOD 2-26R	2600										
IXBOD 2-26RD											
IXBOD 2-27R	2700										
IXBOD 2-27RD											
IXBOD 2-28R	2800										
IXBOD 2-28RD											

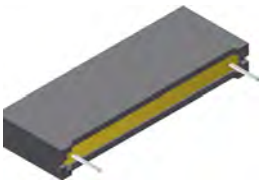

Data according to IEC 60747 and refer to a single diode or thyristor unless otherwise stated.

Fast Break-Over Diodes

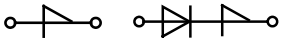

Version R Version RD

Type	V_{BO}		I_{BO}	I_H	V_H	I_D	I_{AVM} ①	I_{SM}	dv/dt	R_{thJA}	Fig. No.	Package style
	T_{VJ} = 25 °C K_T = 0.7·10^{-3} K^{-1}			T_{VJ} = 25 °C		T_{VJ} = 125 °C V_D = 0.8 · V_{BO}	T_{amb} = 50 °C					Outline drawings on pages O-31...O-54
➢ New	V		mA	mA	V	µA	A	A	V/µs	K/W		
IXBOD 2-29R	2900	±50	15	20	4-8	200	0.90	250	>2500	20	X202	
IXBOD 2-29RD												
IXBOD 2-30R	3000											
IXBOD 2-30RD												
IXBOD 2-31R	3100											
IXBOD 2-31RD												
IXBOD 2-32R	3200											
IXBOD 2-32RD												
IXBOD 2-33R	3300											
IXBOD 2-33RD												
IXBOD 2-34R	3400											
IXBOD 2-34RD												
IXBOD 2-35R	3500											
IXBOD 2-35RD												
IXBOD 2-36R	3600											
IXBOD 2-36RD												X202 **BOD-Package**
IXBOD 2-37R	3700											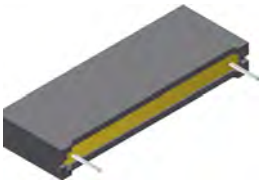
IXBOD 2-37RD												
IXBOD 2-38R	3800											
IXBOD 2-38RD												
IXBOD 2-39R	3900											
IXBOD 2-39RD												
IXBOD 2-40R	4000											
IXBOD 2-40RD												
IXBOD 2-41R	4100											
IXBOD 2-41RD												
IXBOD 2-42R	4200											
IXBOD 2-42RD												
IXBOD 2-43R	4300	±50	15	20	4-8	200	0.90	250	>3500	20		
IXBOD 2-44R	4400											
IXBOD 2-45R	4500											
IXBOD 2-46R	4600											
IXBOD 2-47R	4700											
IXBOD 2-48R	4800											
IXBOD 2-49R	4900											
IXBOD 2-50R	5000											
IXBOD 2-51R	5100											
IXBOD 2-52R	5200											
IXBOD 2-53R	5300											
IXBOD 2-54R	5400											
IXBOD 2-55R	5500											
IXBOD 2-56R	5600											

① Leads soldered on PCB board, T_{stg} and T_{VJ} = -40 ... +125°C

Data according to IEC 60747 and refer to a single diode or thyristor unless otherwise stated.

Power Relays

For a complete listing of IXYS Integrated Circuits Division's Solid-State Relay products, please visit: *www.ixysic.com*

BI

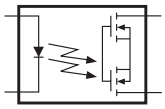

1-Form-A Relays: Single-Pole, Bidirectional

Part No.	Relay Type	Blocking Voltage	Load Current			On Resistance	Input Control Current	Switching Speeds	Isolation Voltage	Off-State Leakage	Package Type
			Free Air	5°C/W Heat Sink	T_C = 25°C			t_{on} / t_{off}			
➢ New		V_P	A_{rms}	A_{rms}	A_{rms}	Ω	mA	ms	V_{rms}	µA	
CPC1906Y	BI	60	2	-	-	0.3	10	10 / 5	2500	1	36
➢ CPC1907B	BI	60	6	-	-	0.06	5	5 / 1	5000	1	66
CPC1908J	BI	60	3.5	8.5	15	0.3	10	20 / 5	2500	1	29
CPC1909J	BI	60	6.5	15	15	0.1	10	25 / 10	2500	1	37
CPC1916Y	BI	100	2.5	-	-	0.34	10	5 / 3	2500	1	36
CPC1918J	BI	100	5.25	13	15	0.1	10	25 / 10	2500	1	37
CPC1926Y	BI	250	0.7	-	-	1.4	10	10 / 10	2500	1	36
CPC1927J	BI	250	2.7	6.7	15	0.2	10	25 / 10	2500	1	37
CPC1967J	BI	400	1.35	3.35	13.15	0.85	10	20 / 5	2500	1	29
➢ CPC1968J	BI	500	2	5	15	0.35	10	20 / 5	2500	1	37
CPC1973Y	BI	400	0.35	-	-	5	10	5 / 3	2500	1	36
CPC1977J	BI	600	1.25	3.1	12.25	1	10	20 / 5	2500	1	29
CPC1978J	BI	800	0.75	1.85	7.25	2.3	10	20 / 5	2500	1	29
CPC1979J	BI	600	1.4	3.5	14.5	0.75	10	25 / 5	2500	1	37
CPC1981Y	BI	1000	0.18	-	-	18	10	10 / 5	2500	1	36
➢ CPC1983B	BI	600	0.5	-	-	6	5	5 / 2	5000	1	66
CPC1983Y	BI	600	0.5	-	-	6	5	5 / 2	2500	1	36
➢ CPC1983YE	BI	600	0.5	-	-	6	5	5 / 2	4000	1	36
CPC1986J	BI	1000	0.65	1.6	6.5	3	10	20 / 5	2500	1	29
CPC1988J	BI	1000	0.9	2.25	9.4	2.5	10	20 / 5	2500	1	37

UNI

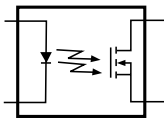

1-Form-A Relays: Single-Pole, Unidirectional

CPC1706Y	UNI	60	4	-	-	0.09	5	5 / 2	2500	1	36
CPC1708J	UNI	60	4	11.85	24	0.08	10	20 / 5	2500	1	29
CPC1709J	UNI	60	9	22.8	32	0.05	10	20 / 5	2500	1	37
CPC1718J	UNI	100	6.75	17.5	32	0.075	10	20 / 5	2500	1	37
CPC1726Y	UNI	250	1	-	-	0.75	10	5 / 2	2500	1	36
CPC1727J	UNI	250	3.4	8.6	20	0.09	10	20 / 5	2500	1	37
CPC1777J	UNI	600	1.5	4.6	15	0.5	10	20 / 5	2500	1	29
CPC1779J	UNI	600	1.65	4.12	15	0.4	10	20 / 5	2500	1	37
CPC1786J	UNI	1000	0.65	1.75	6.9	2	10	20 / 5	2500	1	29
CPC1788J	UNI	1000	1	2.45	10.3	1.25	10	20 / 5	2500	1	37

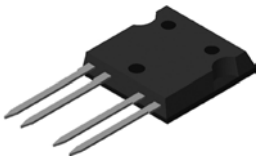

29 i4-PAC

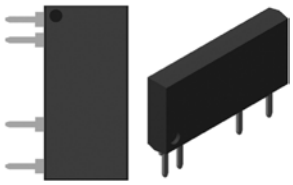

36 Power SIP

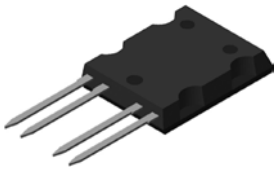

37 ISOPLUS-264

66 Power SOIC

Optically Isolated AC Power Switches

The OptoMOS line of power products uses dual power-SCR outputs to produce an alternative to optocoupler and Triac circuits. These AC Power Switches provide a blocking voltage of up to 800V_P . In addition, tightly controlled zero-cross circuitry ensures switching of AC loads while minimizing the generation of transients. The input and output circuits are optically coupled to provide 3750V_{rms} of isolation and noise immunity between control and load circuits. Long life and environmental integrity make these power switches ideal for controlling a variety of AC circuits in industrial environments where electromagnetic interference would disrupt the operation of electromechanical relays.

Optically Isolated AC Power Switches: $I_{LOAD} \leq 1A$

Part No. ➢ New	Blocking Voltage V_P	Load Current A_{rms}	Input Control Current mA	Operating Frequency min. Hz max.	Isolation Voltage V_{rms}	Fig. No.
CPC1943	400	0.5	5	20 - 500	3750	15, 16
CPC1945G	400	1	5	20 - 400	3750	2
CPC1945Y	400	1	5	20 - 400	3750	23
CPC1961	600	0.25	5	20 - 500	3750	20, 22
CPC1963	600	0.5	5	20 - 500	3750	15, 16
➢ CPC1964G	800	1	5	20 - 500	2500	2
➢ CPC1964Y	800	1	5	20 - 500	2500	23
CPC1965G	600	1	5	20 - 400	3750	2
CPC1965Y	600	1	5	20 - 400	3750	23
CPC1972	800	0.25	5	20 - 500	3750	12, 14
PD1201	400	1	5	20 - 500	3750	2
PD2401	500	1	5	20 - 500	3750	2
PD2601	600	1	5	20 - 500	3750	2
PM1204	400	0.5	5	20 - 500	3750	15, 16
PM1205	500	0.5	5	20 - 500	3750	15, 16
PM1206	600	0.5	5	20 - 500	3750	15, 16
PS1201	400	1	5	20 - 500	3750	23
PS2401	500	1	5	20 - 500	3750	23
PS2601	600	1	5	20 - 500	3750	23

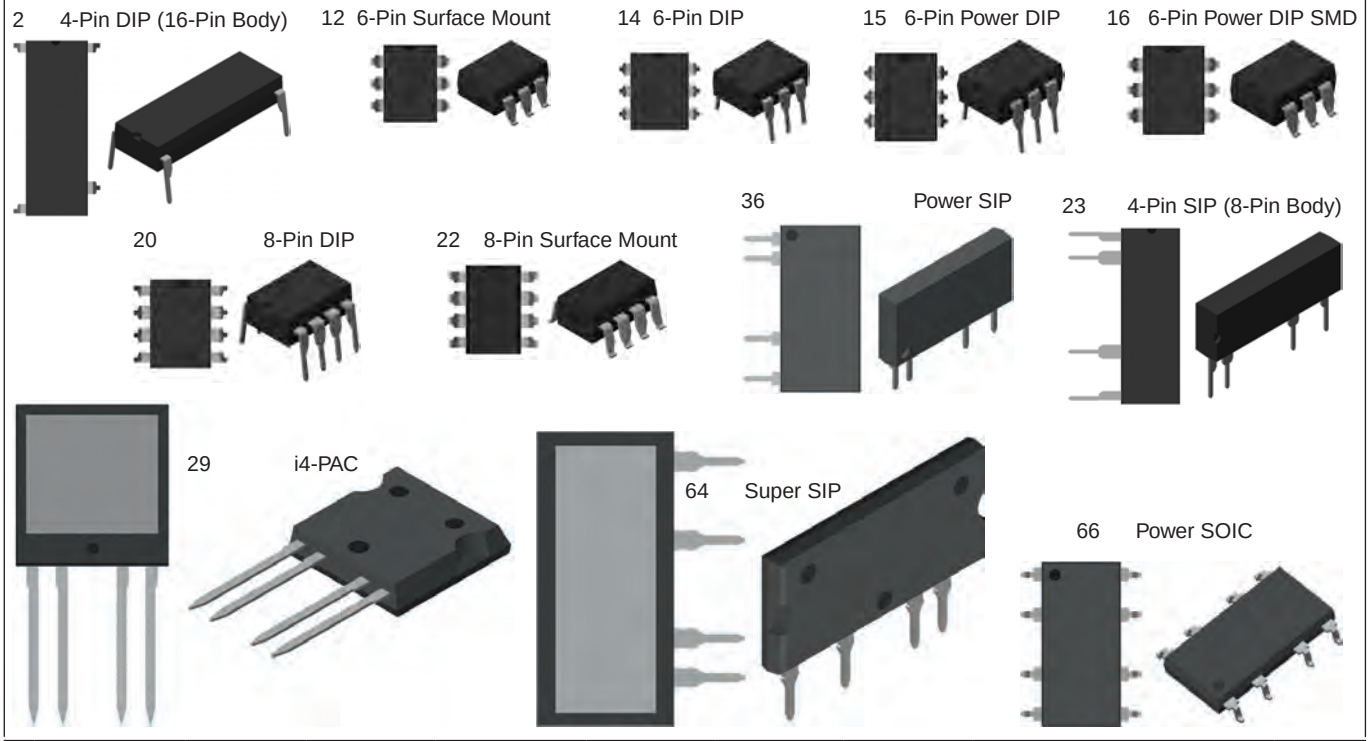

Part Number ➢ New	Blocking Voltage V_P	Load Current No Heat Sink A_{rms}	Load Current with 5°C/W Heat Sink A_{rms}	Load Current T_C = 25°C A_{rms}	Input Control Current mA	Input Control Voltage V	Operating Frequency-Range Hz	Isolation Voltage V_{rms}	Fig. No.
➢ CPC1964B	800	1.5	-	-	5	-	20 - 500	5000	66
➢ CPC1964BX6	600	1.5	-	-	5	-	20 - 500	5000	66
CPC1966	600	3	-	-	5	-	20 - 500	3750	36
CPC1966B	800	3	-	-	5	-	20 - 500	5000	66
➢ CPC1966YX6	600	3	-	-	5	-	20 - 500	3750	36
CPC1976	600	2	-	-	5	-	20 - 500	3750	36
➢ CPC1976YX6	600	2	-	-	5	-	20 - 500	3750	36
CPC1998J	800	5	20	50	5	-	20 - 500	2500	29
➢ CPC40055ST	800	5	20	40	5	-	20 - 500	2500	64
➢ CPC44055ST	800	5	20	40	-	9 - 16	20 - 500	2500	64

For data sheets, go to www.ixysic.com/Products/ProdList.htm

Gate Drivers

These ultra-fast, high current MOSFET and IGBT gate drivers are optimized for high efficiency performance in motor drive and power conversion applications. With output current ratings of 1.5A to 30A, they are designed to switch the largest MOSFETs and IGBTs with minimum switching times and at frequencies up to 10MHz. Depending on the output current rating, these gate drivers are offered in DFN (56), SOIC (54), Power SOIC (53), DIP (20), TO-220 (57), and TO-263 (58) packages. “F” versions include one inverting driver and one non-inverting driver, “I” versions are inverters, “N” versions are non-inverters, and “D” versions are non-inverters that include an enable function.

Part No. ➢ New	Output Type	I_{PEAK} T_C = 25°C A_P	Output Resistance Ω	Logic Config.	Enable Function	Undervoltage Lockout V	Fig. No.
➢ **IX4423**	DUAL	3	4	I	-	-	54
➢ **IX4424**	DUAL	3	4	N	-	-	54
➢ **IX4425**	DUAL	3	4	F	-	-	54
➢ **IX4426**	DUAL	1.5	9	I	-	-	54, 56
➢ **IX4427**	DUAL	1.5	9	N	-	-	54, 56
➢ **IX4428**	DUAL	1.5	9	F	-	-	54, 56
IXD_602*	DUAL	2	4	F, I, N	-	-	20, 53, 54, 56
IXD_604*	DUAL	4	2.5	F, I, N, D	• (D)	-	20, 53, 54, 56
IXD_609*	SINGLE	9	1	I, N, D	• (D)	-	20, 53, 54, 56, 57, 58
IXD_614*	SINGLE	14	0.8	I, N, D	• (D)	-	20, 53, 57, 58
IXD_630*	SINGLE	30	0.4	I, N, D	• (D)	$V_{CC} \leq 12.5$	57, 58
IXD_630M*	SINGLE	30	0.4	I, N, D	• (D)	$V_{CC} \leq 9$	57, 58

* = Package Code

20 8-Pin DIP
Package Code: PI

53 8-Pin Power SOIC
Package Code: SI
with exposed metal back

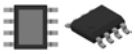

54 8-Pin SOIC
Package Code: SIA

56 8-Pin DFN
Package Code: D2

57 5-Pin TO-220
Package Code: CI

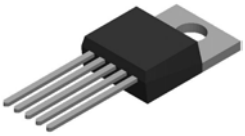

58 5-Pin TO-263
Package Code: YI

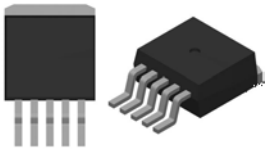

Features:

- 1.5A to 30A Peak Source / Sink Drive Current
- Wide Operating Voltage Range: 4.5V to 35V
- -40°C to +125°C Extended Operating Temperature Range
- Logic Input Withstands Negative Swing of up to -5V
- Matched Rise and Fall Times
- Low Propagation Delay Time
- Low 10mA Supply Current
- Low Output Impedance

Applications:

- Efficient Power MOSFET and IGBT Switching
- Switch Mode Power Supplies
- Motor Controls
- DC to DC Converters
- Class-D Switching Amplifiers
- Pulse Transformer Driver

IXD_604SI/SIA, IXD_609SI and IXD_614SI are AEC Q100 Qualified!

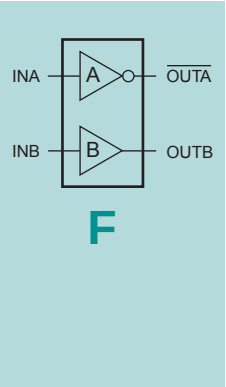

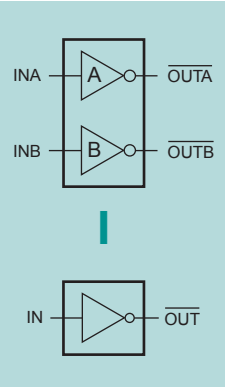

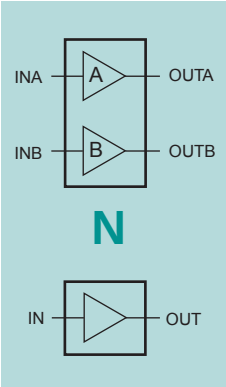

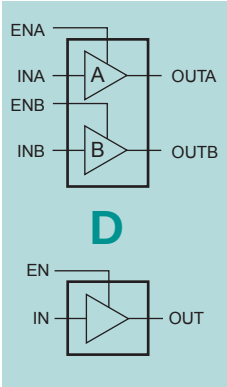

For data sheets, go to www.ixysic.com/Products/ProdList.htm

Gate Drivers

IX2113 600V High-Side & Low-Side MOSFET and IGBT Gate Driver

The IX2113 is a high voltage integrated circuit that can drive high speed MOSFETs and IGBTs that operate at up to +600V. The IX2113 is configured with independent high-side and low-side referenced output channels, both of which can source and sink 2A. The floating high-side channel can drive an N-channel power MOSFET or IGBT 600V from the common reference. IX2113 is supplied in a 16-pin SOIC package or a 14-pin DIP package.

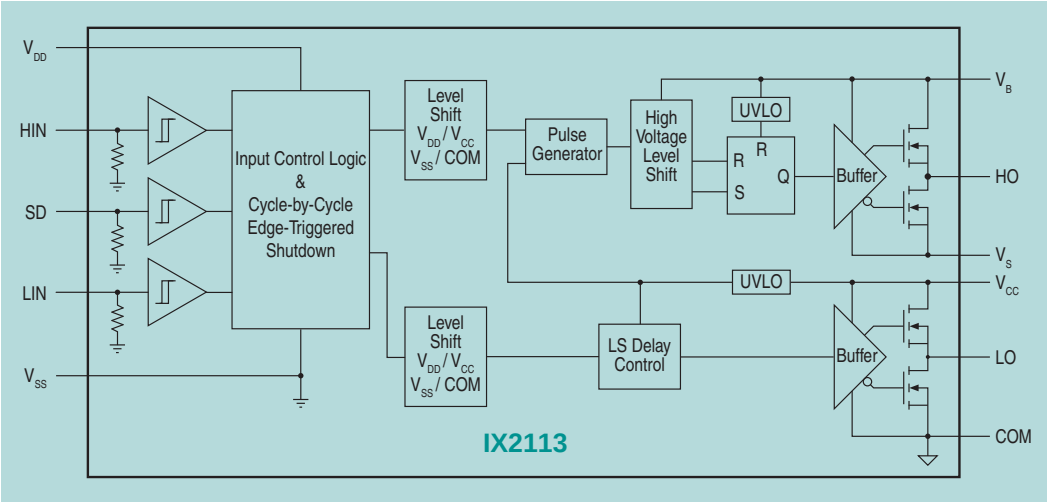

Features:

- Floating Channel for Bootstrap Operation up to 600V with an absolute maximum Rating of 700V
- Outputs Capable of Sourcing and Sinking 2A
- Gate Drive Supply Range From 10V to 20V
- Enhanced Robustness due to SOI Process
- Tolerant to Negative Voltage Transients: dV/dt Immune
- 3.3V Logic Compatible
- Undervoltage Lockout for Both High-Side and Low-Side Outputs
- Matched Propagation Delays

IX21844 High Voltage Half-Bridge Gate Driver

The IX21844 is a high voltage IC that can drive high speed MOSFETs and IGBTs that operate at up to +600V. The IX21844 is configured with dependent high-side and low side referenced output channels that can source 1.4A and sink 1.8A. The floating high-side channel can drive an N-channel power MOSFET or IGBT 600V from the common reference. A programmable dead-time can be set between 400ns and 5ms to ensure that both the high-side and low-side power MOSFET or IGBT are not enabled at the same time.

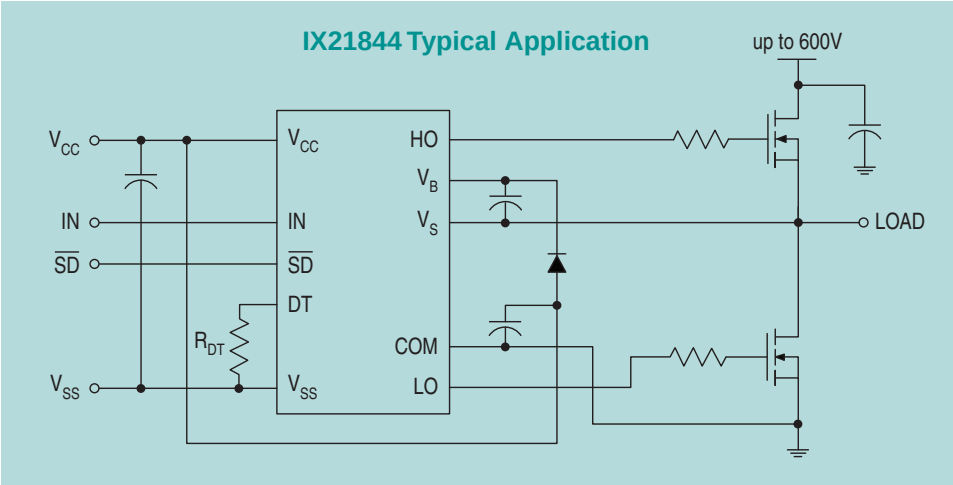

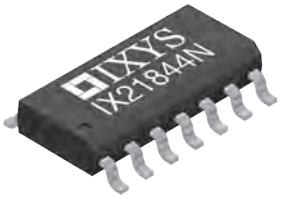

Features:

- Floating Channel for Bootstrap Operation to +600V with an Absolute Maximum Rating of +700V
- Programmable Dead Time
- Outputs Can Source 1.4A and Sink 1.8A
- Gate Drive Supply Range From 10V to 20V
- Tolerant to Negative Voltage Transients: dV/dt Immune
- 3.3V and 5V Logic Compatible
- Undervoltage Lockout for Both High-side and Low-Side Outputs
- Matched Propagation Delays

Applications:

- Switch Mode Power Supplies
- Motor Driver Inverters
- DC/DC Converters
- Uninterruptable Power Supplies (UPS)

For data sheets, go to
www.ixysic.com/Products/ProdList.htm

Gate Drivers

IX2127 600V High-Side MOSFET and IGBT Gate Driver

The IX2127 is a high voltage, high-speed power MOSFET and IGBT driver. The device's high voltage level-shift technique enables it to operate at up to 600V. Proprietary common-mode design techniques provide stable operation in high dV/dt noise environments.

The IX2127 detects an over-current condition in the driven MOSFET or IGBT device, and shuts down drive to that device. An open-drain output, FAULT, indicates that an over-current shutdown has occurred. The gate driver output typically can source 250mA and sink 500mA, which is suitable for fluorescent lamp ballast, motor control, SMPS, and other converter drive topologies. Available in 8-pin DIP and 8-pin SOIC packages.

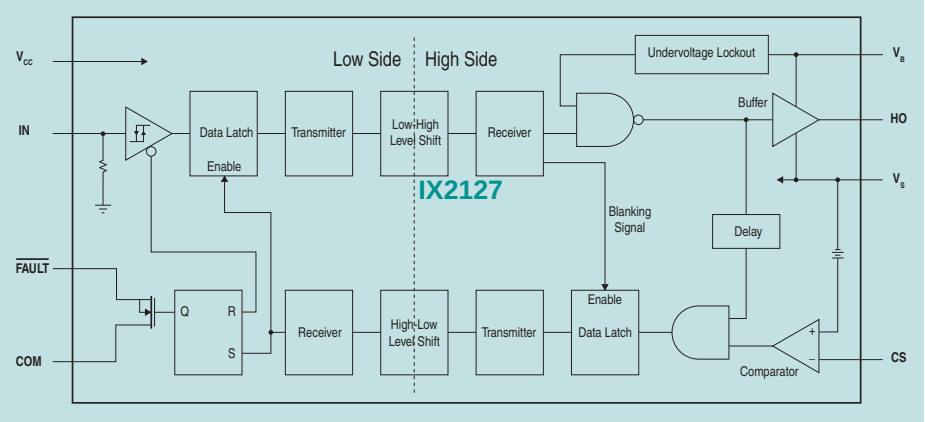

8-pin DIP

8-pin SOIC

Features:

- Floating Channel Designed for Bootstrap Operation up to 600V
- Tolerant to Negative Transient Voltages; dV/dt Immune
- Undervoltage Lockout
- 3.3V, 5V, and 12V Input Logic Compatible
- Open-Drain FAULT Indicator Pin shows Over-Current Shutdown
- Output in Phase with the Input

Applications:

- High Speed Gate Driver
- Motor Drive Inverter

IX2204 Dual Low Side IGBT Gate Driver

The IX2204 is a dual high current gate driver specifically designed to drive the gates of high current IGBTs. The IX2204 provides two high current outputs capable of sourcing 2A and sinking 4A. The outputs can be paralleled for IGBT gates that require higher drive current. The outputs have a wide operating voltage range, and are able to provide a negative gate drive voltage to ensure the turn-off of high power IGBTs. A desaturation detection circuit protects the power IGBT during a short circuit. The IX2204 has a programmable two-level turn-off feature that protects the device against excessive voltages when the IGBT is being turned off due to an over-current situation. The IX2204 has under voltage lockout circuitry, a fault status output, and is available in a 16-lead thermally enhanced SOIC package.

IX2204 Functional Block Diagram

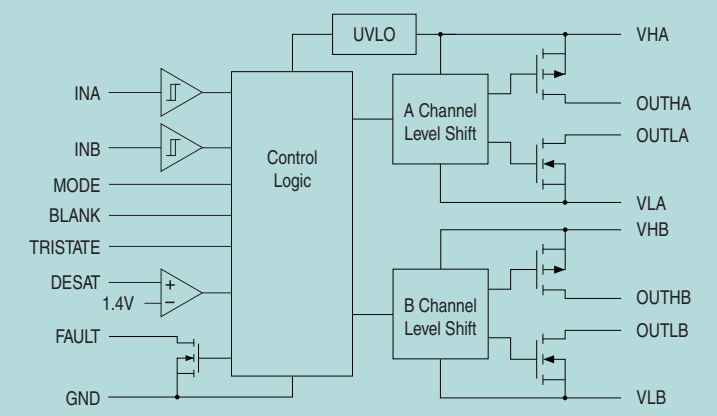

Applications:

- Efficient IGBT Switching
- Motor Controls
- Switch Mode Power Supplies

Features:

- High Output Current: 2A Source / 4A Sink
- Wide Operating Voltage Range: -10V to +26V
- Negative Gate Drive Capability
- Desaturation Detection Circuit
- Separate Source and Sink Outputs
- Programmable Blanking and Output Tristate
- TTL Compatible Inputs
- -40°C to +125°C Extended Operating Temperature Range
- Under-Voltage Lockout Circuitry
- Fault Status Output

For data sheets, go to www.ixysic.com/Products/ProdList.htm

Gate Drivers

IX2120 1200V High and Low Side Gate Driver

The IX2120 is a high voltage integrated circuit that can drive high speed MOSFETs and IGBTs that operate at up to +1200V. The IX2120 is configured with independent high-side and low-side referenced output channels, both of which can source and sink 2A. The floating high-side channel can drive an N-channel power MOSFET or IGBT 1200V from the common reference.
The IX2120 is available in a 28-pin SOIC package.

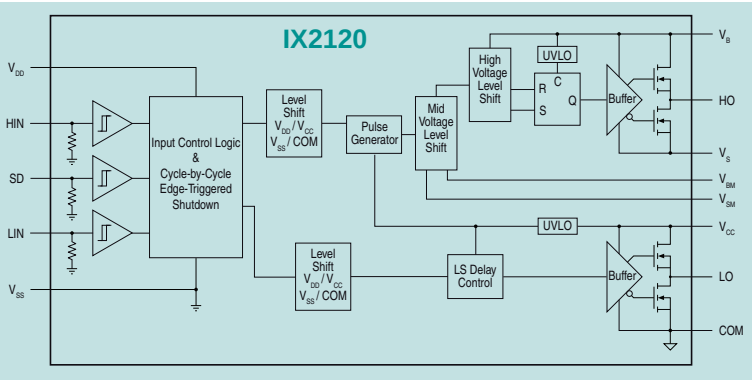

Applications:

- Isolated IGBT / MOSFET Gate
- Switch Mode Power Supplies
- Industrial Inverters
- Motor Drivers

Features:

- Floating Channel for Bootstrap Operation to +1200V
- Outputs Capable of Sourcing and Sinking 2A
- Gate Drive Supply Range From 15V to 20V
- Enhanced Robustness due to SOI Process
- Tolerant to Negative Voltage Transients: dV/dt Immune
- 3.3V Logic Compatible
- Undervoltage Lockout for High-Side & Low-Side Outputs

IX3120 2.5A-Output Optically Coupled Gate Driver

The IX3120 Gate Driver includes an input infrared LED that is optically coupled to a power output stage. The power output stage is capable of sourcing or sinking 2.5A of peak current, which is ideal for driving IGBTs and MOSFETs in the mid-power range. The gate driver optocoupler with its low input LED current, high output peak current, and high noise immunity (25kV/ms) is ideally suited for use in motor control and inverter applications. The IX3120 is provided in an 8-pin DIP package and an 8-pin surface mount package.

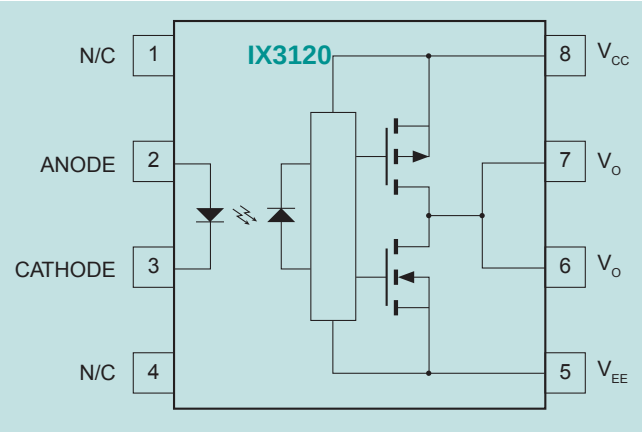

Applications:

- Isolated IGBT / MOSFET Gate Drive
- Switch Mode Power Supplies
- Industrial Inverters
- Motor Drivers

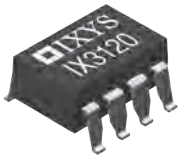

Features:

- 2.5A Maximum Peak Output Current
- 25kV/µs Minimum Common Mode Rejection (CMR) at 1500V_{CM}
- Wide Operating Voltage Range: 15V to 30V
- Undervoltage Lockout with Hysteresis
- 3750V_{rms} Input to Output Isolation
- Wide Temperature Range: -40°C to +100°C

IX3180 2.5A Output Current High Speed Gate Driver Optocoupler

The IX3180 is a high speed MOSFET gate drive optocoupler. It consists of an input infrared LED that is optically coupled to an integrated power gate driver that is capable of sourcing and sinking 2.5A of peak current. The IX3180 is ideally suited for high frequency driving of power MOSFETs used in high performance, DC/DC converters, motor control inverter applications, and high performance switching power supplies.

The IX3180 is available in an 8-pin DIP package
and an 8-pin surface mount package.

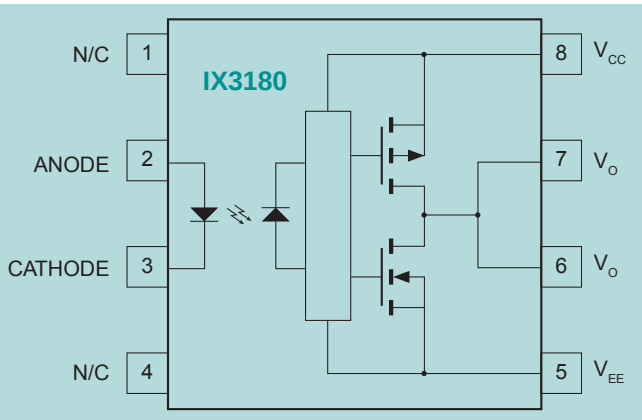

Applications:

- Isolated Power MOSFET Gate Drive
- Switch Mode Power Supplies
- Industrial Inverters
- Motor Drivers

Features:

- 2.5A Maximum Peak Output Current
- 200ns Maximum Propagation Delay Over Temperature Range
- 20ns Typical Pulse Width Distortion
- 10kV/µs Minimum Common Mode Rejection (CMR) at 1500V_{CM}
- Wide Operating Voltage Range: 10V to 20V
- Undervoltage Lockout with Hysteresis
- 3750V_{rms} Input to Output Isolation
- Wide Temperature Range: -40°C to +100°C

For data sheets, go to **www.ixysic.com/Products/ProdList.htm**

Gate Drivers

Optically Isolated Gate Drivers

The CPC1580 and CPC1590 are high speed, optically isolated Gate Driver ICs. On-chip circuitry charges an external capacitor from the load voltage which eliminates the need for an external IC power supply. These Gate Drivers are ideal for low duty cycle switching applications. Both devices are provided in an 8-pin flatpack package.

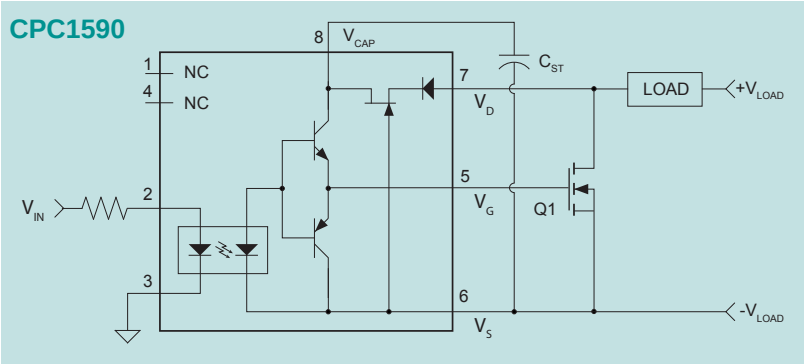

8-Pin Flatpack

Features:

- No External IC Power Supply
- Low Drive Power Requirements (TTL/CMOS Compatible)
- Load Voltages up to 200V
- Fast Switching Times - On: 40µsec / Off: 400µsec

Applications:

- Instrumentation
- Multiplexers
- I/O Subsystems
- Meters (Watt-Hour, Water, Gas)
- Medical Equipment (Patient / Equipment Isolation)
- Security
- Aerospace
- Industrial Controls

Part Number	Input Control Current (mA)	Gate Voltage @I_F = 5mA (V_P)	Blocking Voltage (V_P)	Regulated Capacitor Voltage ($V_{CAP-MAX}$)	Switching Speeds t_{on} / t_{off} (µs)	Isolation Voltage (V_{rms})
CPC1580	2.5	7.5 - 12	65	V_{DS} - 0.2V	40 / 400	3750
CPC1590	2.5	7.5 - 12	200	16	40 / 400	3750

Optically Isolated Dual MOSFET Gate Drivers

These Dual Optically Isolated Photodiode Arrays, which can produce an open-circuit voltage of up to 12V, are well suited for use in discrete solid state relay designs. The FDA215 and the FDA217 are provided in either an 8-pin DIP package or in an 8-pin surface-mount package.

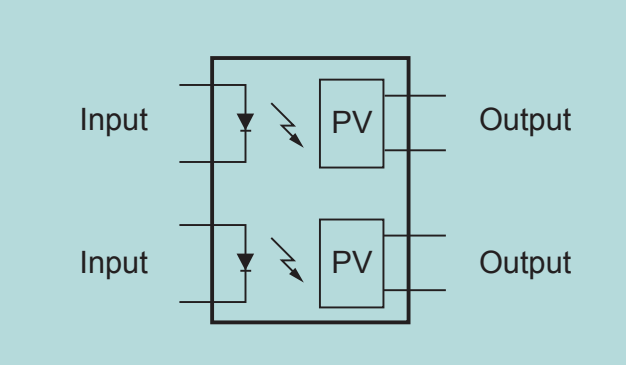

8-Pin DIP

8-Pin Surface Mount

Features:

- Isolated 5.5V to 12V Photovoltaic Output
- Floating Outputs for Parallel or Series Configuration

Applications:

- MOSFET Driver
- Isolated Floating Power Source

Part No.	Input Control Current mA	Nominal Open-Circuit Voltage V_{OC} V	Nominal Short-Circuit Current I_{SC} µA	Switching Speeds t_{on} / t_{off} ms	Isolation Voltage V_{rms}	Package Type
FDA215	5	5.5	2.5	5 / 5	3750	8-Pin DIP, 8-Pin Surface Mount
FDA217	5	11.75	4.5	2 / 0.5	3750	8-Pin DIP, 8-Pin Surface Mount

For data sheets, go to **www.ixysic.com/Products/ProdList.htm**

Linear Optocouplers

OptoMOS Linear Optocouplers feature an infrared LED optically coupled to a pair of photodiodes. The input photodiode is used to generate a feedback signal that provides a servomechanism to the LED drive current thus compensating for the LED's nonlinear characteristics. The output photodiode provides an isolated output signal that is linear with respect to the servo LED current.

Features:

- Couples Analog & Digital Signals
- 3750V_{rms} Input / Output Isolation
- Bandwidth >200kHz in Photoconductive Mode
- Bandwidth 40kHz in Photovoltaic Mode
- High Gain Stability
- Low Input / Output Capacitance
- Low Power Consumption
- 0.01% Servo Linearity
- THD 87dB Typical
- Machine Insertable, Wave Solderable

Applications:

- Power Supply Feedback Voltage / Current
- Medical Sensor Interfacing
- Isolation of Process Control Transducers
- Isolated 4-20mA Converters
- Digital Telephone Isolation

Part Number	Servo Gain $K1 = I_1/I_F$ Min / Max	Forward Gain $K2 = I_2/I_F$ Min / Max	Transfer Gain $K3 = K_2/K_1$ Min / Max	Input Control Current mA	Isolation Voltage V_{rms}	Package Type
LOC110	0.004 / 0.03	0.004 / 0.03	0.668 / 1.179	2 - 10	3750	20, 21, 22
LOC111	0.008 / 0.03	0.006 / 0.03	0.733 / 1.072	2 - 10	3750	20, 21, 22
LOC112	0.004 / 0.03	0.004 / 0.03	0.733 / 1.072	2 - 10	3750	20, 21, 22
LOC117	0.008 / 0.03	0.006 / 0.03	0.887 / 1.072	2 - 10	3750	20, 21, 22
LOC210	0.004 / 0.03	0.004 / 0.03	0.773 / 1.072	2 - 10	3750	4
LOC211	0.008 / 0.03	0.006 / 0.03	0.773 / 1.072	2 - 10	3750	4

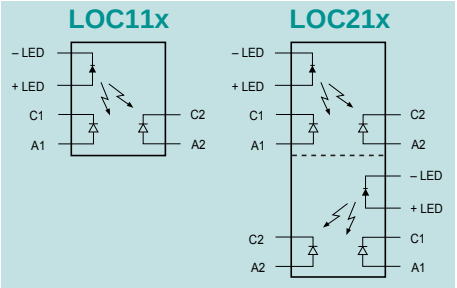

16-Pin SOIC **4**

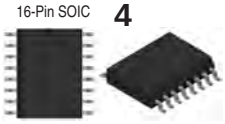

8-Pin DIP **20**

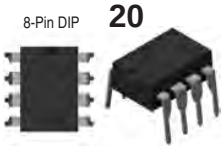

8-Pin Flatpack **21**

8-Pin Surface Mount **22**

Two Fundamental Operating Configurations:

Photoconductive Mode:

- **Wide Bandwidth (>200kHz)**
- **8-bit Linearity**

Photovoltaic Mode:

- **14-bit Linearity**
- **40kHz Bandwidth**

Isolation Amplifier (Photovoltaic Mode)

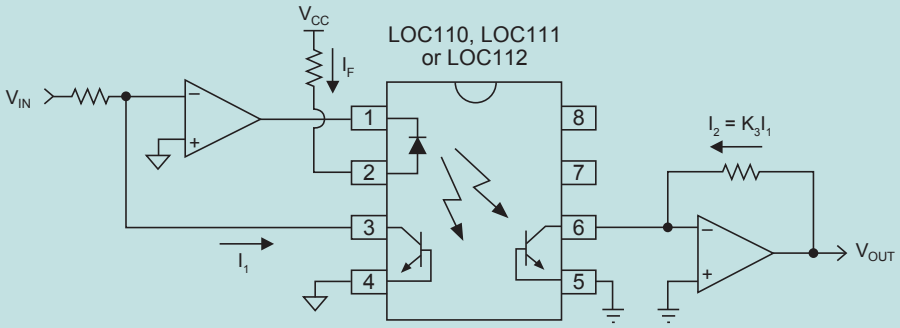

N-Channel Depletion Mode FETs

Our N-channel depletion mode Field Effect Transistors (FETs) utilize a proprietary third generation vertical DMOS process. The third generation process realizes world class, high voltage MOSFET performance in an economical silicon gate process. The vertical DMOS process yields a robust device for low-power applications with high input impedance. These highly reliable FET devices have been used extensively in our solid state relays for industrial and telecommunications applications. These normally on MOSFETs are well suited for low cost, pre-regulator applications that are tolerant of high voltage drop and power dissipation between the power source and the output regulator stage.

Part Number	$V_{(BR)DSX}$ (V)	$R_{DS(on)}$ Max (W)	$V_{GS(off)}$ Min (V)	$V_{GS(off)}$ Max (V)	I_{DSS} @ V_{GS} = 0V Min (mA)	I_D @ V_{GS} = -0.57V Min (mA)	Package Type SOT
CPC3701	60	1	-0.8	-2.9	600	-	89
CPC3703	250	4	-1.6	-3.9	360	-	89
CPC3708	350	14	-2	-3.6	-	130	89 / 223
CPC3710	250	10	-1.6	-3.9	220	-	89
CPC3714	350	14	-1.6	-3.9	240	-	89
CPC3720	350	22	-1.6	-3.9	130	-	89
CPC3730	350	30	-1.6	-3.9	140	-	89
CPC3902	250	2.5	-1.4	-3.1	400	-	223
CPC3909	400	9	-0.9	-3.1	300	-	89 / 223
CPC3960	600	44	-1.4	-3.1	100	-	223
CPC3980	800	45	-1.4	-3.1	100	-	223
CPC3982	800	380	-1.4	-3.1	20	-	223
CPC5602	350	14	-2	-3.6	-	130	223
CPC5603	415	14	-2	-3.6	-	130	223

SOT-223

SOT-89

Product Application Notes and Technical Information

Available from www.ixysuk.com

- Use of a rectifier diode above T_{JMAX} with a short term overload
- Leakage current against temperature and applied voltage
- Setting disc spring type clamps
- Replacement of devices in assembly type XA3370ZX12WRs
- Possible failure modes in press-pack devices
- Recommended clamps for capsule semiconductors
- Guidance for soldering leads to thyristors, GTO thyristors and IGBT's
- Device mounting instruction
- Stocking & handling requirements for press-pack and module devices
- Recommended maximum force for module gate terminals
- Press releases
- Quality documents
- IXYS UK product nomenclatures

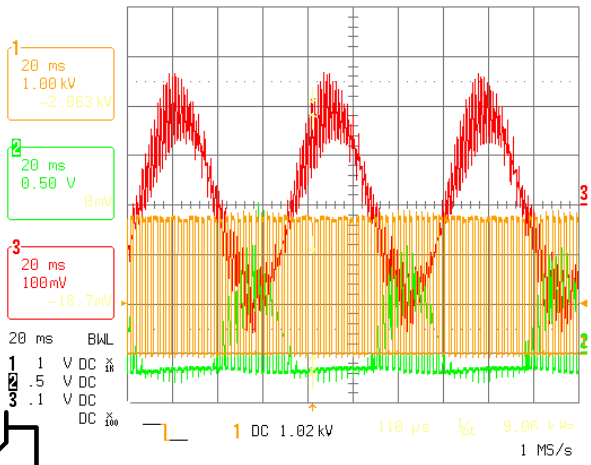

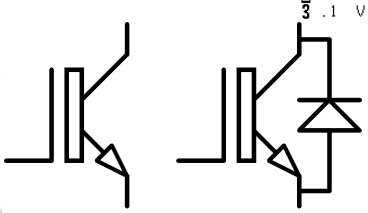

Rectifier Diodes

Our comprehensive range of rectifier diodes offers class leading performance and reliability. Devices are available with blocking voltages from 200V up to 7.2kV. Optimised to offer low conduction losses, these devices are ideally suited to line frequency applications up to 400Hz including input rectifiers for variable speed drives, traction converters, trackside substations, welding and DC power supplies. Featuring high temperature alloyed die construction, these devices offer low thermal impedance with high overload capacity and are designed to survive even the most arduous applications.

The latest additions to the IXYS UK Rectifier Diode family are the new 38mm and 50mm dia die Wespack Rectifier Diodes and the new 96mm large area rectifier diodes. These new designs are constructed using low temperature sintering technology and have an improved package design for maximum power to package ratio, as well as better thermal and electromechanical performance. The Wespack parts are available in current ratings up to 4295A and voltage ratings up to 3000V. The 96mm parts are available in current ratings up to 12100A and voltage ratings up to 6000V.

Also now available is a new 1263A rated M24 stud based assembly with voltage grades up to 2500V.

Stud Types

Part No.	V_{RRM}	I_{FAV}	I_{FSM}	I^2t	V_{T0}	r_T	T_{JM}	R_{thJC}		Fig. No.	Package style
		T_C = 55°C	10 ms ½ sine V_R - ≤ 60% V_{RRM}		@T_{JM}			d.c. 180° sine	120° Rect.		Outlines on pages O-01...O-30
➢ New	V	A	A	A^2s	V	mΩ	°C	K/W	K/W		
W0428RE250	2500	428	5500	151 x 10^3	0.926	0.739	150	0.1300	0.1530	W39	S R
W0428RE280	2800	428	5500	151 x 10^3	0.926	0.739	150	0.1300	0.1530	W39	
W0428RE320	3200	428	5500	151 x 10^3	0.926	0.739	150	0.1300	0.1530	W39	
W0428RF250	2500	428	5500	151 x 10^3	0.926	0.739	150	0.1300	0.1530	W24	
W0428RF280	2800	428	5500	151 x 10^3	0.926	0.739	150	0.1300	0.1530	W24	
W0428RF320	3200	428	5500	151 x 10^3	0.926	0.739	150	0.1300	0.1530	W24	
W0428SE250	2500	428	5500	151 x 10^3	0.926	0.739	150	0.1300	0.1530	W39	
W0428SE280	2800	428	5500	151 x 10^3	0.926	0.739	150	0.1300	0.1530	W39	
W0428SE320	3200	428	5500	151 x 10^3	0.926	0.739	150	0.1300	0.1530	W39	
W0428SF250	2500	428	5500	151 x 10^3	0.926	0.739	150	0.1300	0.1530	W24	
W0428SF280	2800	428	5500	151 x 10^3	0.926	0.739	150	0.1300	0.1530	W24	
W0428SF320	3200	428	5500	151 x 10^3	0.926	0.739	150	0.1300	0.1530	W24	
W0503RC160	1600	503	5500	151 x 10^3	0.990	0.740	180	0.1300	0.1530	W24	W23 Weight 250 g
W0503RC200	2000	503	5500	151 x 10^3	0.990	0.740	180	0.1300	0.1530	W24	
W0503RC240	2400	503	5500	151 x 10^3	0.990	0.740	180	0.1300	0.1530	W24	
W0503SC160	1600	503	5500	151 x 10^3	0.990	0.740	180	0.1300	0.1530	W24	
W0503SC200	2000	503	5500	151 x 10^3	0.990	0.740	180	0.1300	0.1530	W24	
W0503SC240	2400	503	5500	151 x 10^3	0.990	0.740	180	0.1300	0.1530	W24	
W0735RA120	1200	735	9000	405 x 10^3	0.790	0.342	190	0.1300	0.1530	W23	
W0735RA150	1500	735	9000	405 x 10^3	0.790	0.342	190	0.1300	0.1530	W23	
W0735SA120	1200	735	9000	405 x 10^3	0.790	0.342	190	0.1300	0.1530	W23	
W0735SA150	1500	735	9000	405 x 10^3	0.790	0.342	190	0.1300	0.1530	W23	
➢ **W1263YC200KER**	2000	675	11000	605 x 10^3	0.870	0.330	175	0.1249	0.1359	W114	
➢ **W1263YC250KER**	2500	675	11000	606 x 10^3	0.870	0.330	175	0.1249	0.1359	W114	W24 Weight 250 g
➢ **W1263YC200KES**	2000	675	11000	605 x 10^3	0.870	0.330	175	0.1249	0.1359	W114	
➢ **W1263YC250KES**	2500	675	11000	605 x 10^3	0.870	0.330	175	0.1249	0.1359	W114	

W114 Weight 650 g

W39 Weight 250 g

Standard base clamp kits *for rectifier diodes & phase control thyristors*

These Single side cooled square base mounting clamps are suitable for 34 mm to 50 mm pole face devices with clamping force in the range from 1130 Kgf to 2140 Kgf. Suitable for devices with blocking voltages from 400 volts up to 6 KV.

Part No.	Poleface reference	Outline
XK1500CB034M †	34-38	WC64
XK1130SB076M	34-38	WC65
XK2140SB076M	47-50	WC66

Standard part replacements to the obsolete flat-base power silicon diodes types KBN/R, KCN/R & KDN/R. For other voltages and thyristor options please consult factory.

Part No.	Old square base part no.	Base polarity	V_{RRM} V	I_{FAV} T_C = 100°C A	I_{FSM} kA	I^2t A^2s	V_T V	r_T mΩ	R_{th} K/W	Temp °C	Outlines see pages O-01...O-30
† W1185LC450KBR	SW45KBR515	Anode	4500	435	10.2	520 x10³	1.000	0.575	0.085	160	WC64
† W1185LC450KBN	SW45KBN515	Cathode	4500	380	10.2	520 x10³	1.000	0.575	0.101	160	WC64
† W1411LC360KBR	SW36KBR595	Anode	3600	505	12.2	744 x10³	0.900	0.388	0.085	160	WC64
† W1411LC360KBN	SW36KBN595	Cathode	3600	445	12.2	744 x10³	0.900	0.388	0.101	160	WC64
† W1524LC300KBR	SW30KBR636	Anode	3000	540	13.4	898 x10³	0.870	0.323	0.085	160	WC64
† W1524LC300KBN	SW30KBN636	Cathode	3000	470	13.4	898 x10³	0.870	0.323	0.101	160	WC64
† W1748LC220KBR	SW22KBR805	Anode	2200	660	13.5	911 x10³	0.870	0.280	0.085	175	WC64
† W1748LC220KBN	SW22KBN805	Cathode	2200	582	13.5	911 x10³	0.870	0.280	0.101	175	WC64
† W2058LC120KBR	SW12KBR935	Anode	1200	760	16.1	1.30 x10⁶	0.790	0.192	0.085	175	WC64
† W2058LC120KBN	SW12KBN935	Cathode	1200	665	16.1	1.30 x10⁶	0.790	0.192	0.101	175	WC64
W1185LC450KCR	SW38KBR515	Anode	4500	455	10.2	520 x10³	1.000	0.575	0.080	160	WC65
W1185LC450KCN	SW45KBN515	Cathode	4500	395	10.2	520 x10³	1.000	0.575	0.097	160	WC65
W1411LC360KCR	SW36KBR595	Anode	3600	530	13.2	756 x10³	0.900	0.388	0.080	160	WC65
W1411LC360KCN	SW36KBN595	Cathode	3600	460	12.3	759 x10³	0.900	0.388	0.097	160	WC65
W1524LC300KCR	SW30KBR635	Anode	3000	565	13.4	898 x10³	0.870	0.323	0.080	160	WC65
W1524LC300KCN	SW30KBN636	Cathode	3000	490	13.4	898 x10³	0.870	0.323	0.097	160	WC65
W1748LC220KCR	SW22KBR805	Anode	2200	690	13.5	911 x10³	0.870	0.280	0.080	175	WC65
W1748LC220KCN	SW22KBN805	Cathode	2200	600	13.5	911 x10³	0.870	0.280	0.097	175	WC65
W2058LC120KCR	SW12KBR935	Anode	1200	800	16.1	1.30 x10⁶	0.790	0.192	0.080	175	WC65
W2058LC120KCN	SW12KBN935	Cathode	1200	690	16.1	1.30 x10⁶	0.790	0.192	0.097	175	WC65
W3082MC450KDR	SB45KDR680	Anode	4500	1115	26.6	3.54 x10⁶	0.923	0.192	0.037	160	WC66
W3082MC450KDN	SB45KDN680	Cathode	4500	1030	26.6	3.54 x10⁶	0.923	0.192	0.041	160	WC66
W3708MC350KDR	SB35KDR820	Anode	3500	1240	33.7	5.68 x10⁶	0.958	0.112	0.037	160	WC66
W3708MC350KDN	SB35KDN820	Cathode	3500	1145	33.7	5.68 x10⁶	0.958	0.112	0.041	160	WC66
W3842MC280KDR	SB25KDR950	Anode	2800	1325	33.5	5.61 x10⁶	0.831	0.118	0.037	160	WC66
W3842MC280KDN	SB25KDN950	Cathode	2800	1225	33.5	5.61 x10⁶	0.831	0.118	0.041	160	WC66
W5636MC150KDR	SB15KDR14C	Anode	1500	2035	43.9	9.64 x10⁶	0.698	0.059	0.037	175	WC66
W5636MC150KDN	SB15KDN14C	Cathode	1500	1875	43.9	9.64 x10⁶	0.698	0.059	0.041	175	WC66

† = assembly supplied either as kit of parts or sub-assembly with selected diode or thyristor

WC64

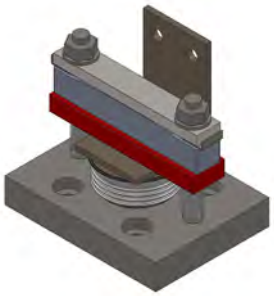

WC65

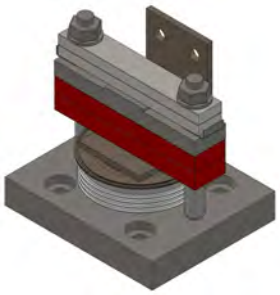

WC66

Rectifier Diodes

Capsule Types

Part No.	V_{RRM}	I_{FAV}	I_{FSM}	I^2t	V_{T0}	r_T	T_{JM}	R_{thJK}		Fig. No.
✞ See foot note ○ Not for new design ➢ New		T_K = 55°C	10 ms ½ sine V_R - ≤ 60% V_{RRM}		@T_{JM}			180° Sine	120° Rect.	
	V	A	A	A^2s	V	mΩ	°C	K/W	K/W	
W0507YH360	3600	505	7600	289 x 10^3	0.970	0.880	160	0.1000	0.1170	W3
W0507YH450	4500	505	7600	289 x 10^3	0.970	0.880	160	0.1000	0.1170	W3
W0642WC160	1600	680	5500	151 x 10^3	1.070	0.676	190	0.0900	0.0980	W1
W0642WC200	2000	680	5500	151 x 10^3	1.070	0.676	190	0.0900	0.0980	W1
W0642WC240	2400	680	5500	151 x 10^3	1.070	0.676	190	0.0900	0.0980	W1
W0944WC120	1200	944	9000	405 x 10^3	0.790	0.342	190	0.0900	0.0980	W1
W0944WC150	1500	944	9000	405 x 10^3	0.790	0.342	190	0.0900	0.0980	W1
W1032LC500	5000	1032	7200	259 x 10^3	1.000	0.702	150	0.0330	0.0400	W4
W1032LC560	5600	1032	7200	259 x 10^3	1.000	0.702	150	0.0330	0.0400	W4
W1032LC600	6000	1032	7200	259 x 10^3	1.000	0.702	150	0.0330	0.0400	W4
W1074YC200	2000	1074	10800	583 x 10^3	0.920	0.390	160	0.0500	0.0610	W2
W1074YC260	2600	1074	10800	583 x 10^3	0.920	0.390	160	0.0500	0.0610	W2
W1074YC320	3200	1074	10800	583 x 10^3	0.920	0.390	160	0.0500	0.0610	W2
W1074YH200	2000	1074	10800	583 x 10^3	0.920	0.390	160	0.0500	0.0610	W3
W1074YH260	2600	1074	10800	583 x 10^3	0.920	0.390	160	0.0500	0.0610	W3
W1074YH320	3200	1074	10800	583 x 10^3	0.920	0.390	160	0.0500	0.0610	W3
W1185LC300	3000	1185	9200	423 x 10^3	1.000	0.575	160	0.0330	0.0393	W4
W1185LC380	3800	1185	9200	423 x 10^3	1.000	0.575	160	0.0330	0.0393	W4
W1185LC450	4500	1185	9200	423 x 10^3	1.000	0.575	160	0.0330	0.0393	W4
W1263YC160	1600	1263	11700	684 x 10^3	0.870	0.330	175	0.0500	0.0610	W2
W1263YC200	2000	1263	11700	684 x 10^3	0.870	0.330	175	0.0500	0.0610	W2
W1263YC250	2500	1263	11700	684 x 10^3	0.870	0.330	175	0.0500	0.0610	W2
W1263YH160	1600	1263	11700	684 x 10^3	0.870	0.330	175	0.0500	0.0610	W3
W1263YH200	2000	1263	11700	684 x 10^3	0.870	0.330	175	0.0500	0.0610	W3
W1263YH250	2500	1263	11700	684 x 10^3	0.870	0.330	175	0.0500	0.0610	W3
W1411LC300	3000	1411	10600	562 x 10^3	0.900	0.388	160	0.0330	0.0393	W4
W1411LC360	3600	1411	10600	562 x 10^3	0.900	0.388	160	0.0330	0.0393	W4
W1520NC500	5000	1478	12000	720 x 10^3	0.904	0.552	150	0.0220	0.0255	W5
W1520NC600	6000	1478	12000	720 x 10^3	0.904	0.552	150	0.0220	0.0255	W5
W1524LC240	2400	1524	12700	800 x 10^3	0.870	0.323	160	0.0330	0.0393	W4
W1524LC300	3000	1524	12700	800 x 10^3	0.870	0.323	160	0.0330	0.0393	W4
➢ **W1730JK240**	2400	1730	12700	800 x 10^3	0.870	0.323	160	0.0270	0.0314	W113
➢ **W1730JK280**	2800	1730	12700	800 x 10^3	0.870	0.323	160	0.0270	0.0314	W113
W1748LC180	1800	1748	15400	1.18 x 10^6	0.870	0.280	175	0.0330	0.0393	W4
W1748LC220	2200	1748	15400	1.18 x 10^6	0.870	0.280	175	0.0330	0.0393	W4
W1748LC250	2500	1748	15400	1.18 x 10^6	0.870	0.280	175	0.0330	0.0393	W4
W1856NC460	4600	1856	16000	1.28 x 10^6	0.975	0.348	160	0.0220	0.0255	W5
W1856NC480	4800	1856	16000	1.28 x 10^6	0.975	0.348	160	0.0220	0.0255	W5
W1975MC650	6500	1975	18000	1.62 x 10^6	0.950	0.510	150	0.0140	0.0158	W54
W1975MC680	6800	1975	18000	1.62 x 10^6	0.950	0.510	150	0.0140	0.0158	W54
W1975MC720	7200	1975	18000	1.62 x 10^6	0.950	0.510	150	0.0140	0.0158	W54
➢ **W1980JK180**	1800	1980	15400	1.18 x 10^6	0.870	0.280	175	0.0270	0.0314	W113
➢ **W1980JK220**	2200	1980	15400	1.18 x 10^6	0.870	0.280	175	0.0270	0.0314	W113
W2054NC360	3600	2054	19000	1.81 x 10^6	0.800	0.300	160	0.0220	0.0274	W5
W2054NC450	4500	2054	19000	1.81 x 10^6	0.800	0.300	160	0.0220	0.0274	W5
W2058LC100	1000	2058	19500	1.90 x 10^6	0.790	0.192	175	0.0330	0.0393	W4
W2058LC120	1200	2058	19500	1.90 x 10^6	0.790	0.192	175	0.0330	0.0393	W4
W2058LC140	1400	2058	19500	1.90 x 10^6	0.790	0.192	175	0.0330	0.0393	W4
W2115MC520	5200	2122	19000	1.81 x 10^6	1.074	0.405	150	0.0140	0.0158	W54
W2115MC560	5600	2122	19000	1.81 x 10^6	1.074	0.405	150	0.0140	0.0158	W54
W2115MC600	6000	2122	19000	1.81 x 10^6	1.074	0.405	150	0.0140	0.0158	W54

Package style

Outlines on pages O-01...O-30

W1 Weight 70 g

W2 Weight 80 g

W3 Weight 140 g

W4 Weight 340 g

W5 Weight 510 g

W54 Weight 530 g

W113 Weight 200 g

Rectifier Diodes

Capsule Types

Part No. ✞ See foot note ○ Not for new design ➢ New	V_{RRM} V	I_{FAV} T_K = 55°C A	I_{FSM} 10 ms ½ sine V_R - ≤ 60% V_{RRM} A	I^2t A²s	V_{T0} @T_{JM} V	r_T mΩ	T_{JM} °C	R_{thJK} 180° Sine K/W	R_{thJK} 120° Rect. K/W	Fig. No.	Package style Outlines on pages O-01...O-30
W2134NC300	3000	2134	20000	2.00 x 10⁶	0.865	0.260	160	0.0220	0.0255	W5	W5 Weight 510 g
W2134NC400	4000	2134	20000	2.00 x 10⁶	0.865	0.260	160	0.0220	0.0255	W5	
➢ **W2340JK120**	1200	2340	19500	1.90 x 10⁶	0.790	0.192	175	0.0270	0.0314	W113	
➢ **W2340JK150**	1500	2340	19500	1.90 x 10⁶	0.790	0.192	175	0.0270	0.0314	W113	
W2624NC200	2000	2624	28000	3.92 x 10⁶	0.780	0.160	160	0.0220	0.0255	W5	
W2624NC250	2500	2624	28000	3.92 x 10⁶	0.780	0.160	160	0.0220	0.0255	W5	
W2820VC360	3600	2820	26200	3.43 x 10⁶	1.300	0.147	160	0.0160	0.0190	W6	W6 Weight 1000 g
W2820VC450	4500	2820	26200	3.43 x 10⁶	1.300	0.147	160	0.0160	0.0190	W6	
W2820VF360	3600	2820	26200	3.43 x 10⁶	1.300	0.147	160	0.0160	0.0190	W43	
W2820VF450	4500	2820	26200	3.43 x 10⁶	1.300	0.147	160	0.0160	0.0190	W43	
W2830HE520	5200	2830	32000	5.12 x 10⁶	0.910	0.260	150	0.0123	0.0133	W105	
W2830HE560	5600	2830	32000	5.12 x 10⁶	0.910	0.260	150	0.0123	0.0133	W105	
W2830HE600	6000	2830	32000	5.12 x 10⁶	0.910	0.260	150	0.0123	0.0133	W105	
➢ **W2840QA180**	1800	2840	20000	2.00 x 10⁶	0.940	0.139	180	0.0230	0.0255	W117	W7 Weight 1700 g
➢ **W2840QA220**	2200	2840	20000	2.00 x 10⁶	0.940	0.139	180	0.0230	0.0255	W117	
W2899MC420	4200	2899	25400	3.23 x 10⁶	0.996	0.222	160	0.0140	0.0158	W54	
W2899MC460	4600	2899	25400	3.23 x 10⁶	0.996	0.222	160	0.0140	0.0158	W54	
W2899MC480	4800	2899	25400	3.23 x 10⁶	0.996	0.222	160	0.0140	0.0158	W54	
W3082MC420	4200	3120	26000	3.38 x 10⁶	0.923	0.192	160	0.0140	0.0160	W54	
W3082MC440	4400	3120	26000	3.38 x 10⁶	0.923	0.192	160	0.0140	0.0160	W54	
W3082MC450	4500	3120	26000	3.38 x 10⁶	0.923	0.192	160	0.0140	0.0160	W54	
W3090HA520	5200	3120	32000	5.12 x 10⁶	0.910	0.260	150	0.0105	0.0116	W106	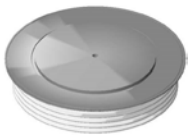 W42 Weight 1200 g
W3090HA560	5600	3120	32000	5.12 x 10⁶	0.910	0.260	150	0.0105	0.0116	W106	
W3090HA600	6000	3120	32000	5.12 x 10⁶	0.910	0.260	150	0.0105	0.0116	W106	
W3128VC300	3000	3128	30000	4.50 x 10⁶	0.875	0.158	160	0.0160	0.0190	W6	
W3128VC400	4000	3128	30000	4.50 x 10⁶	0.875	0.158	160	0.0160	0.0190	W6	
W3128VF300	3000	3128	30000	4.50 x 10⁶	0.875	0.158	160	0.0160	0.0190	W43	W43 Weight 800 g
W3128VF400	4000	3128	30000	4.50 x 10⁶	0.875	0.158	160	0.0160	0.0190	W43	
✞ **W3270NC20A**	2000	3239	27600	3.81 x 10⁶	0.818	0.108	175	0.0220	0.0255	W5	
✞ **W3270NC22A**	2200	3239	27600	3.81 x 10⁶	0.818	0.108	175	0.0220	0.0255	W5	
W3270NC180	1800	3270	28000	3.92 x 10⁶	0.826	0.104	175	0.0220	0.0255	W5	
W3270NC220	2200	3270	28000	3.92 x 10⁶	0.826	0.104	175	0.0220	0.0255	W5	
W3305QK240	2400	3305	18500	1.71 x 10⁶	0.910	0.150	175	0.0170	0.0207	WD2	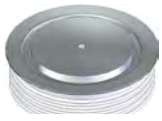 W54 Weight 530 g
W3305QK280	2800	3305	18500	1.71 x 10⁶	0.910	0.150	175	0.0170	0.0207	WD2	
W3455QK200	2000	3455	20000	2.00 x 10⁶	0.940	0.139	180	0.0170	0.0207	WD2	
W3455QK220	2200	3455	20000	2.00 x 10⁶	0.940	0.139	180	0.0170	0.0207	WD2	
W3477MC360	3600	3470	28200	3.98 x10⁶	0.908	0.146	160	0.0140	0.0158	W54	
W3477MC400	4000	3470	28200	3.98 x10⁶	0.908	0.146	160	0.0140	0.0158	W54	
W3697VC220	2200	3697	40000	8.00 x 10⁶	0.860	0.100	160	0.0160	0.0190	W6	W89 Weight 1.3 kg
W3697VC280	2800	3697	40000	8.00 x 10⁶	0.860	0.100	160	0.0160	0.0190	W6	
W3697VF220	2200	3697	40000	8.00 x 10⁶	0.860	0.100	160	0.0160	0.0190	W43	
W3697VF280	2800	3697	40000	8.00 x 10⁶	0.860	0.100	160	0.0160	0.0190	W43	
W3708MC320	3200	3753	30000	4.50 x10⁶	0.958	0.112	160	0.0140	0.0158	W54	
W3708MC350	3500	3753	30000	4.50 x10⁶	0.958	0.112	160	0.0140	0.0158	W54	
○ **W3743ZC400**	4000	3750	35000	6.13 x 10⁶	0.976	0.170	160	0.0110	0.0132	W7	W94 Weight 1.6 kg
○ **W3743ZC450**	4500	3750	35000	6.13 x 10⁶	0.976	0.170	160	0.0110	0.0132	W7	
○ **W3743ZC500**	5000	3750	35000	6.13 x 10⁶	0.976	0.170	160	0.0110	0.0132	W7	
○ **W3743ZD400**	4000	3750	35000	6.13 x 10⁶	0.976	0.170	160	0.0110	0.0132	W42	
○ **W3743ZD450**	4500	3750	35000	6.13 x 10⁶	0.976	0.170	160	0.0110	0.0132	W42	
○ **W3743ZD500**	5000	3750	35000	6.13 x 10⁶	0.976	0.170	160	0.0110	0.0132	W42	

Rectifier Diodes

Capsule Types

Part No. ✞ See foot note ○ Not for new design ➢ New	V_{RRM} V	I_{FAV} T_K = 55°C A	I_{FSM} 10 ms ½ sine V_R - ≤ 60% V_{RRM} A	I^2t A²s	V_{T0} @T_{JM} V	r_T mΩ	T_{JM} °C	R_{thJK} 180° Sine K/W	R_{thJK} 120° Rect. K/W	Fig. No.	Package style Outlines on pages O-01...O-30
W3841VC300	3000	3841	39800	7.92×10^6	0.860	0.115	175	0.0160	0.0190	W6	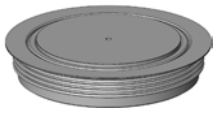 W105 Weight 2300 g
W3841VC340	3400	3841	39800	7.92×10^6	0.860	0.115	175	0.0160	0.0190	W6	
W3841VF300	3000	3841	39800	7.92×10^6	0.860	0.115	175	0.0160	0.0190	W43	
W3841VF340	3400	3841	39800	7.92×10^6	0.860	0.115	175	0.0160	0.0190	W43	
W3842MC240	2400	3842	35100	6.16×10^6	0.831	0.118	160	0.0140	0.0158	W54	
W3842MC280	2800	3842	35100	6.16×10^6	0.831	0.118	160	0.0140	0.0158	W54	
W3864QK120	1200	3864	22200	2.46×10^6	0.861	0.109	180	0.0170	0.0210	WD2	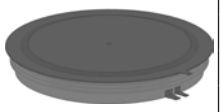 W106 Weight 2900 g
W3864QK150	1500	3864	22200	2.46×10^6	0.861	0.109	180	0.0170	0.0210	WD2	
W3864QK180	1800	3864	22200	2.46×10^6	0.861	0.109	180	0.0170	0.0210	WD2	
W4096ZC340	3400	4096	41700	8.70×10^6	0.730	0.158	160	0.0110	0.0132	W7	
W4096ZC450	4500	4096	41700	8.70×10^6	0.730	0.158	160	0.0110	0.0132	W7	
W4096ZD340	3400	4096	41700	8.70×10^6	0.730	0.158	160	0.0110	0.0132	W42	W113 Weight 200 g
W4096ZD450	4500	4096	41700	8.70×10^6	0.730	0.158	160	0.0110	0.0132	W42	
W4205TJ520	5200	4205	45000	10.10×10^6	0.850	0.190	150	0.0080	0.0085	W89	
W4205TJ560	5600	4205	45000	10.10×10^6	0.850	0.190	150	0.0080	0.0085	W89	
W4205TJ600	6000	4205	45000	10.10×10^6	0.850	0.190	150	0.0080	0.0085	W89	
W4205TE520	5200	4205	45000	10.10×10^6	0.850	0.190	150	0.0080	0.0085	W94	WD2 Weight 200 g
W4205TE560	5600	4205	45000	10.10×10^6	0.850	0.190	150	0.0080	0.0085	W94	
W4205TE600	6000	4205	45000	10.10×10^6	0.850	0.190	150	0.0080	0.0085	W94	
➢ **W4295NK200**	2000	4295	28000	3.92×10^6	0.826	0.104	175	0.0145	0.0171	WD8	
➢ **W4295NK220**	2200	4295	28000	3.92×10^6	0.826	0.104	175	0.0145	0.0171	WD8	
W4534NC020	200	4534	40000	8.00×10^6	0.765	0.052	190	0.0220	0.0255	W5	WD3 Weight 270 g
W4534NC060	600	4534	40000	8.00×10^6	0.765	0.052	190	0.0220	0.0255	W5	
W4693QK050	500	4693	31500	4.98×10^6	0.904	0.057	180	0.0170	0.0207	WD2	
W4693QK080	800	4693	31500	4.98×10^6	0.904	0.057	180	0.0170	0.0207	WD2	
W4693QR050	500	4693	31500	4.98×10^6	0.904	0.057	180	0.0170	0.0207	WD7	WD5 Weight 1200 g
W4693QR080	800	4693	31500	4.98×10^6	0.904	0.057	180	0.0170	0.0207	WD7	
W4713HL300	3000	4713	56000	15.70×10^6	0.807	0.090	160	0.0120	0.0132	WD5	
W4713HL350	3500	4713	56000	15.70×10^6	0.807	0.090	160	0.0120	0.0132	WD5	
W4713HM300	3000	4713	56000	15.70×10^6	0.807	0.090	160	0.0120	0.0132	WD6	
W4713HM350	3500	4713	56000	15.70×10^6	0.807	0.090	160	0.0120	0.0132	WD6	
W4767MC180	1800	4755	38000	7.22×10^6	0.827	0.083	175	0.0140	0.0158	W54	WD6 Weight 1500 g
W4767MC220	2200	4755	38000	7.22×10^6	0.827	0.083	175	0.0140	0.0158	W54	
W5092ZC320	3200	5092	58000	16.8×10^6	0.874	0.079	160	0.0110	0.0132	W7	
W5092ZC350	3500	5092	58000	16.8×10^6	0.874	0.079	160	0.0110	0.0132	W7	
W5092ZD320	3200	5092	58000	16.8×10^6	0.874	0.079	160	0.0110	0.0132	W42	
W5092ZD350	3500	5092	58000	16.8×10^6	0.874	0.079	160	0.0110	0.0132	W42	
W5130MK240	2400	5130	42000	8.82×10^6	0.910	0.070	175	0.0130	0.0149	WD3	
W5130MK280	2800	5130	42000	8.82×10^6	0.910	0.070	175	0.0130	0.0149	WD3	
W5139TJ400	4000	5139	55000	15.10×10^6	0.826	0.136	160	0.0080	0.0085	W89	WD7 Weight 200 g
W5139TJ480	4800	5139	55000	15.10×10^6	0.826	0.136	160	0.0080	0.0085	W89	
W5139TE400	4000	5139	55000	15.10×10^6	0.826	0.136	160	0.0080	0.0085	W94	
W5139TE480	4800	5139	55000	15.10×10^6	0.826	0.136	160	0.0080	0.0085	W94	
W5282ZC240	2400	5282	60000	18.00×10^6	0.970	0.064	160	0.0110	0.0132	W7	
W5282ZC300	3000	5282	60000	18.00×10^6	0.970	0.064	160	0.0110	0.0132	W7	
W5282ZD240	2400	5282	60000	18.00×10^6	0.970	0.064	160	0.0110	0.0132	W42	WD8 Weight 250 g
W5282ZD300	3000	5282	60000	18.00×10^6	0.970	0.064	160	0.0110	0.0132	W42	
W5334MK200	2000	5334	46800	10.95×10^6	0.892	0.069	180	0.0130	0.0149	WD3	
W5334MK220	2200	5334	46800	10.95×10^6	0.892	0.069	180	0.0130	0.0149	WD3	
W5636MC120	1200	5636	46000	10.58×10^6	0.698	0.059	175	0.0140	0.0160	W54	
W5636MC150	1500	5636	46000	10.58×10^6	0.698	0.059	175	0.0140	0.0160	W54	

Rectifier Diodes

Capsule Types

Part No.	V_{RRM}	I_{FAV}	I_{FSM}	I^2t	V_{T0}	r_T	T_{JM}	R_{thJK}		Fig. No.
✞ See foot note ○ Not for new design ➢ New		T_K = 55°C	10 ms ½ sine V_R - ≤ 60% V_{RRM}		@T_{JM}			180° Sine	120° Rect.	
	V	A	A	A^2s	V	mΩ	°C	K/W	K/W	
W5696VC100	1000	5696	53000	14.00 x 10^6	0.650	0.059	190	0.0160	0.0190	W6
W5696VC140	1400	5696	53000	14.00 x 10^6	0.650	0.059	190	0.0160	0.0190	W6
W5696VF100	1000	5696	53000	14.00 x 10^6	0.650	0.059	190	0.0160	0.0190	W43
W5696VF140	1400	5696	53000	14.00 x 10^6	0.650	0.059	190	0.0160	0.0190	W43
W5715ED520	5200	5715	60600	18.36 x 10^6	0.863	0.135	150	0.0060	0.0063	W112
W5715ED560	5600	5715	60600	18.36 x 10^6	0.863	0.135	150	0.0060	0.0063	W112
W5715ED600	6000	5715	66000	18.36 x 10^6	0.863	0.135	150	0.0060	0.0063	W112
○ **W5838ZC180**	1800	5838	64000	20.50 x 10^6	0.800	0.074	175	0.0110	0.0132	W7
○ **W5838ZC220**	2200	5838	64000	20.50 x 10^6	0.800	0.074	175	0.0110	0.0132	W7
○ **W5838ZD180**	1800	5838	64000	20.50 x 10^6	0.800	0.074	175	0.0110	0.0132	W42
○ **W5838ZD220**	2200	5838	64000	20.50 x 10^6	0.800	0.074	175	0.0110	0.0132	W42
W5984TJ360	3600	5984	62000	19.20 x 10^6	0.758	0.097	160	0.0080	0.0085	W89
W5984TJ400	4000	5984	62000	19.20 x 10^6	0.758	0.097	160	0.0080	0.0085	W89
W5984TE360	3600	5984	62000	19.20 x 10^6	0.758	0.097	160	0.0080	0.0085	W94
W5984TE400	4000	5984	62000	19.20 x 10^6	0.758	0.097	160	0.0080	0.0085	W94
W6262ZC200	2000	6262	67000	22.40 x 10^6	0.730	0.064	175	0.0110	0.0132	W7
W6262ZC240	2400	6262	67000	22.40 x 10^6	0.730	0.064	175	0.0110	0.0132	W7
W6262ZD200	2000	6262	67000	22.40 x 10^6	0.730	0.064	175	0.0110	0.0132	W42
W6262ZD240	2400	6262	67000	22.40 x 10^6	0.730	0.064	175	0.0110	0.0132	W42
W6360EC520	5200	6360	60600	18.36 x 10^6	0.863	0.135	150	0.0050	0.0054	W111
W6360EC560	5600	6360	60600	18.36 x 10^6	0.863	0.135	150	0.0050	0.0054	W111
W6360EC600	6000	6360	66000	18.36 x 10^6	0.863	0.135	150	0.0050	0.0054	W111
W7032DB020	200	8690	49500	12.30 x 10^6	0.700	0.029	170	0.0100	0.0136	W49
W7032DB040	400	8690	49500	12.30 x 10^6	0.700	0.029	170	0.0100	0.0136	W49
W7045MC030	300	7045	54000	14.60 x 10^6	0.793	0.033	190	0.0140	0.0158	W54
W7045MC060	600	7045	54000	14.60 x 10^6	0.793	0.033	190	0.0140	0.0158	W54
○ **W8405ZC100**	1000	8405	72000	25.90 x 10^6	0.670	0.038	190	0.0110	0.0132	W7
○ **W8405ZC140**	1400	8405	72000	25.90 x 10^6	0.670	0.038	190	0.0110	0.0132	W7
○ **W8405ZD100**	1000	8405	72000	25.90 x 10^6	0.670	0.038	190	0.0110	0.0132	W42
○ **W8405ZD140**	1400	8405	72000	25.90 x 10^6	0.670	0.038	190	0.0110	0.0132	W42
W8570TJ180	1800	8570	70200	24.60 x 10^6	0.690	0.050	175	0.0080	0.0085	W89
W8570TJ220	2200	8570	70200	24.60 x 10^6	0.690	0.050	175	0.0080	0.0085	W89
W8570TE180	1800	8570	70200	24.60 x 10^6	0.690	0.050	175	0.0080	0.0085	W94
W8570TE220	2200	8570	70200	24.60 x 10^6	0.690	0.050	175	0.0080	0.0085	W94
W9830TJ120	1200	9830	72000	25.90 x 10^6	0.670	0.043	190	0.0080	0.0085	W89
W9830TJ150	1500	9830	72000	25.90 x 10^6	0.670	0.043	190	0.0080	0.0085	W89
W9830TE120	1200	9830	72000	25.90 x 10^6	0.670	0.043	190	0.0080	0.0085	W94
W9830TE150	1500	9830	72000	25.90 x 10^6	0.670	0.043	190	0.0080	0.0085	W94
W106CEC240	2400	10650	92000	42.32 x 10^6	0.734	0.047	160	0.0050	0.0054	W111
W106CEC280	2800	10650	92000	42.32 x 10^6	0.734	0.047	160	0.0050	0.0054	W111
W121CEC180	1800	12100	94500	44.65 x 10^6	0.726	0.042	175	0.0050	0.0054	W111
W121CEC220	2200	12100	94500	44.65 x 10^6	0.726	0.042	175	0.0050	0.0054	W111

✞ = Avalanche rated diode - Please consult factory for full rating

Package style

Outlines on pages O-01...O-30

W6 Weight 1000 g

W7 Weight 1700 g

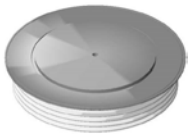

W42 Weight 1200 g

W43 Weight 800 g

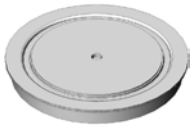

W49 Weight 120 g

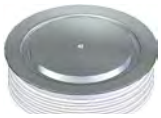

W54 Weight 530 g

WD3 Weight 270 g

W112 Weight 2100 g

W111 Weight 1600 g

W94 Weight 1.6 kg

W89 Weight 1.3 kg

Fast Recovery Diodes

Fast Recovery Diodes are an essential complement to any switching device and are more often than not the limiting factor in the design and performance of modern power converters. To address the needs of our customers, we have developed an unparalleled range of Fast Recovery Diodes. These diodes are available with blocking voltages up to 6.5 kV making them suitable for operation with DC link voltages up to 3.3 kV and average current ratings to 4 kA depending upon type. The devices utilise both alloyed and floating silicon technologies to deliver robust devices that you can rely on in demanding applications. This range has been sub-classified as follows to aid appropriate device selection; Fast Recovery, Soft Recovery, Extra Fast Recovery Diodes and HP Sonic-FRDs.

Standard Fast Recovery Capsule Types

Fast Recovery Diodes: These parts are particularly suitable for use as anti-parallel diodes in Gate Turn-Off thyristors and Fast Thyristor inverters, diodes for choppers.

Part No.	V_{RRM}	I_{FAV}	I_{FSM}	I^2t	Typ. Reverse Recovery T_J = 150°C				V_{T0}	r_T	R_{thJK}	Fig. No.
		T_K = 55°C	10 ms ½ sine V_R - ≤ 60% V_{RRM}		t_{rr}	Q_{rr}	@I_{FM}	@ -di_F/dt	@T_{JM} = 150°C		d.c. 180° sine	
	V	A	A	A^2s	µs	µC	A	A/µs	V	mΩ	K/W	
M0588LC400	4000	588	3955	78.2 x 10^3	3.50	450	1000	60	2.320	1.770	0.0330	W4
M0588LC450	4500	588	3955	78.2 x 10^3	3.50	450	1000	60	2.320	1.770	0.0330	W4
M0790YC200	2000	790	9000	405 x 10^3	4.00	425	1000	60	1.272	0.584	0.0500	W2
M0790YC250	2500	790	9000	405 x 10^3	4.00	425	1000	60	1.272	0.584	0.0500	W2
M0790YH200	2000	790	9000	405 x 10^3	4.00	425	1000	60	1.272	0.584	0.0500	W3
M0790YH250	2500	790	9000	405 x 10^3	4.00	425	1000	60	1.272	0.584	0.0500	W3
M0914LC200	2000	914	8500	361 x 10^3	3.20	300	1000	60	1.768	0.653	0.0320	W4
M0914LC250	2500	914	8500	361 x 10^3	3.20	300	1000	60	1.768	0.653	0.0320	W4
M1010NC400	4000	1010	9600	461 x 10^3	3.20	1450	1000	200	1.700	1.030	0.0220	W5
M1010NC450	4500	1010	9600	461 x 10^3	3.20	1450	1000	200	1.700	1.030	0.0220	W5
M1010ND400	4000	1010	9600	461 x 10^3	3.20	1450	1000	200	1.700	1.030	0.0220	W37
M1010ND450	4500	1010	9600	461 x 10^3	3.20	1450	1000	200	1.700	1.030	0.0220	W37
M1163NC400	4000	1163	10800	583 x 10^3	6.40	1200	1000	60	1.500	0.770	0.0220	W5
M1163NC450	4500	1163	10800	583 x 10^3	6.40	1200	1000	60	1.500	0.770	0.0220	W5
M1163ND400	4000	1163	10800	583 x 10^3	6.40	1200	1000	60	1.500	0.770	0.0220	W37
M1163ND450	4500	1163	10800	583 x 10^3	6.40	1200	1000	60	1.500	0.770	0.0220	W37
M1502NC200	2000	1502	17000	1.45 x 10^6	3.50	350	1000	60	1.240	0.440	0.0220	W5
M1502NC250	2500	1502	17000	1.45 x 10^6	3.50	350	1000	60	1.240	0.440	0.0220	W5
M1502ND200	2000	1502	17000	1.45 x 10^6	3.50	350	1000	60	1.240	0.440	0.0220	W37
M1502ND250	2500	1502	17000	1.45 x 10^6	3.50	350	1000	60	1.240	0.440	0.0220	W37
M1583VC400	4000	1583	24800	3.08 x 10^6	5.00	2000	1000	200	1.693	0.525	0.0160	W6
M1583VC450	4500	1583	24800	3.08 x 10^6	5.00	2000	1000	200	1.693	0.525	0.0160	W6
M1583VF400	4000	1583	24800	3.08 x 10^6	5.00	2000	1000	200	1.693	0.525	0.0160	W43
M1583VF450	4500	1583	24800	3.08 x 10^6	5.00	2000	1000	200	1.693	0.525	0.0160	W43
M1609NC200	2000	1609	17500	1.53 x 10^6	3.20	800	1000	200	1.310	0.345	0.0220	W5
M1609NC260	2600	1609	17500	1.53 x 10^6	3.20	800	1000	200	1.310	0.345	0.0220	W5
M1609ND200	2000	1609	17500	1.53 x 10^6	3.20	800	1000	200	1.310	0.345	0.0220	W37
M1609ND260	2600	1609	17500	1.53 x 10^6	3.20	800	1000	200	1.310	0.345	0.0220	W37
M2273VC300	3000	2273	28000	3.92 x 10^6	8.50	2500	1000	60	1.239	0.244	0.0160	W6
M2273VC360	3600	2273	28000	3.92 x 10^6	8.50	2500	1000	60	1.239	0.244	0.0160	W6
M2273VF300	3000	2273	28000	3.92 x 10^6	8.50	2500	1000	60	1.239	0.244	0.0160	W43
M2273VF360	3600	2273	28000	3.92 x 10^6	8.50	2500	1000	60	1.239	0.244	0.0160	W43
M2408NC020	200	2408	24000	2.88 x 10^6	1.90	250	1000	200	1.065	0.122	0.0220	W5
M2408NC060	600	2408	24000	2.88 x 10^6	1.90	250	1000	200	1.065	0.122	0.0220	W5
M2408ND020	200	2408	24000	2.88 x 10^6	1.90	250	1000	200	1.065	0.122	0.0220	W37
M2408ND060	600	2408	24000	2.88 x 10^6	1.90	250	1000	200	1.065	0.122	0.0220	W37
M2639ZC420	4200	2639	27520	3.79 x 10^6	8.50	2300	1000	60	1.380	0.290	0.0110	W7
M2639ZC450	4500	2639	27520	3.79 x 10^6	8.50	2300	1000	60	1.380	0.290	0.0110	W7
M2639ZD420	4200	2639	27520	3.79 x 10^6	8.50	2300	1000	60	1.380	0.290	0.0110	W42
M2639ZD450	4500	2639	27520	3.79 x 10^6	8.50	2300	1000	60	1.380	0.290	0.0110	W42
M2698ZC250	2500	2698	27800	3.86 x 10^6	6.20	1200	1000	60	1.000	0.330	0.0110	W7
M2698ZC280	2800	2698	27800	3.86 x 10^6	6.20	1200	1000	60	1.000	0.330	0.0110	W7
M2698ZC350	3500	2698	27800	3.86 x 10^6	6.20	1200	1000	60	1.000	0.330	0.0110	W7
M2698ZD250	2500	2698	27800	3.86 x 10^6	6.20	1200	1000	60	1.000	0.330	0.0110	W42
M2698ZD280	2800	2698	27800	3.86 x 10^6	6.20	1200	1000	60	1.000	0.330	0.0110	W42
M2698ZD350	3500	2698	27800	3.86 x 10^6	6.20	1200	1000	60	1.000	0.330	0.0110	W42
M2837VC180	1800	2837	31800	5.10 x 10^6	7.00	2100	1000	60	0.900	0.170	0.0160	W6
M2837VC250	2500	2837	31800	5.10 x 10^6	7.00	2100	1000	60	0.900	0.170	0.0160	W6
M2837VF180	1800	2837	31800	5.10 x 10^6	7.00	2100	1000	60	0.900	0.170	0.0160	W43
M2837VF250	2500	2837	31800	5.10 x 10^6	7.00	2100	1000	60	0.900	0.170	0.0160	W43
M3770ZC200	2000	3770	44000	9.68 x 10^6	7.00	2000	1000	60	1.190	0.118	0.0110	W7
M3770ZC240	2400	3770	44000	9.68 x 10^6	7.00	2000	1000	60	1.190	0.118	0.0110	W7
M3770ZC300	3000	3770	44000	9.68 x 10^6	7.00	2000	1000	60	1.190	0.118	0.0110	W7
M3770ZD200	2000	3770	44000	9.68 x 10^6	7.00	2000	1000	60	1.190	0.118	0.0110	W42
M3770ZD240	2400	3770	44000	9.68 x 10^6	7.00	2000	1000	60	1.190	0.118	0.0110	W42
M3770ZD300	3000	3770	44000	9.68 x 10^6	7.00	2000	1000	60	1.190	0.118	0.0110	W42

Package style

Outlines on pages O-01...O-30

W2 Weight 80 g

W3 Weight 140 g

W4 Weight 340 g

W5 Weight 510 g

W6 Weight 1000 g

W7 Weight 1700 g

W37 Weight 510 g

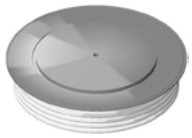

W42 Weight 1200 g

W43 Weight 800 g

Soft Recovery Diodes

Our soft recovery diodes are available with a range of reverse recovery characteristics tailored to meet the requirements of both freewheeling and snubber applications.These devices are available with blocking voltages up to 6kV and average currents up to 2413A. 24mm to 75mm diameter silicon slices. These parts are particularly suitable where soft recovery is required, such as RCD snubbers, voltage clamping and snubberless applications.

Stud Types

Part No.	V_{RRM}	I_{FAV}	I_{FSM}	I^2t	Typ. Reverse Recovery				V_{T0}	r_T	T_{JM}	R_{thJC}	Fig. No.	Package style
		T_C = 55°C	10 ms ½ sine V_R - ≤ 60% V_{RRM}		T_{JM} t_{rr}	Q_{rr}	@ I_{FM}	@ $-di_F/dt$	@T_{JM}			d.c. 180° sine		Outlines on pages O-01...O-30
	V	A	A	A^2s	µs	µC	A	A/µs	V	mW	°C	K/W		
M0130RL200	2000	130	2240	25.0 x 10^3	2.60	430	1000	150	1.290	1.540	125	0.3000	W20	S R
M0130RL250	2500	130	2240	25.0 x 10^3	2.60	430	1000	150	1.290	1.540	125	0.3000	W20	
M0130SL200	2000	130	2240	25.0 x 10^3	2.60	430	1000	150	1.290	1.540	125	0.3000	W20	
M0130SL250	2500	130	2240	25.0 x 10^3	2.60	430	1000	150	1.290	1.540	125	0.3000	W20	
M0130RM200	2000	130	2240	25.0 x 10^3	2.60	430	1000	150	1.290	1.540	125	0.3000	W21	
M0130RM250	2500	130	2240	25.0 x 10^3	2.60	430	1000	150	1.290	1.540	125	0.3000	W21	
M0130SM200	2000	130	2240	25.0 x 10^3	2.60	430	1000	150	1.290	1.540	125	0.3000	W21	
M0130SM250	2500	130	2240	25.0 x 10^3	2.60	430	1000	150	1.290	1.540	125	0.3000	W21	
M0139RL120	1200	139	2450	30.0 x 10^3	1.00	125	1000	100	1.240	1.280	125	0.3000	W20	W20 Weight 85 g
M0139RL180	1800	139	2450	30.0 x 10^3	1.00	125	1000	100	1.240	1.280	125	0.3000	W20	
M0139SL120	1200	139	2450	30.0 x 10^3	1.00	125	1000	100	1.240	1.280	125	0.3000	W20	
M0139SL180	1800	139	2450	30.0 x 10^3	1.00	125	1000	100	1.240	1.280	125	0.3000	W20	
M0139RM120	1200	139	2450	30.0 x 10^3	1.00	125	1000	100	1.240	1.280	125	0.3000	W21	
M0139RM180	1800	139	2450	30.0 x 10^3	1.00	125	1000	100	1.240	1.280	125	0.3000	W21	
M0139SM120	1200	139	2450	30.0 x 10^3	1.00	125	1000	100	1.240	1.280	125	0.3000	W21	
M0139SM180	1800	139	2450	30.0 x 10^3	1.00	125	1000	100	1.240	1.280	125	0.3000	W21	
M0268RC200	2000	268	4250	90.3 x 10^3	2.80	300	1000	150	1.210	1.200	125	0.1300	W24	
M0268RC250	2500	268	4250	90.3 x 10^3	2.80	300	1000	150	1.210	1.200	125	0.1300	W24	W21 Weight 85 g
M0268SC200	2000	268	4250	90.3 x 10^3	2.80	300	1000	150	1.210	1.200	125	0.1300	W24	
M0268SC250	2500	268	4250	90.3 x 10^3	2.80	300	1000	150	1.210	1.200	125	0.1300	W24	
M0268RJ200	2000	268	4250	90.3 x 10^3	2.80	300	1000	150	1.210	1.200	125	0.1300	W22	
M0268RJ250	2500	268	4250	90.3 x 10^3	2.80	300	1000	150	1.210	1.200	125	0.1300	W22	
M0268SJ200	2000	268	4250	90.3 x 10^3	2.80	300	1000	150	1.210	1.200	125	0.1300	W22	
M0268SJ250	2500	268	4250	90.3 x 10^3	2.80	300	1000	150	1.210	1.200	125	0.1300	W22	W22 Weight 200 g
M0280RC200	2000	280	4500	100 x 10^3	2.80	610	1000	150	1.280	0.920	125	0.1300	W24	
M0280RC250	2500	280	4500	100 x 10^3	2.80	610	1000	150	1.280	0.920	125	0.1300	W24	
M0280SC200	2000	280	4500	100 x 10^3	2.80	610	1000	150	1.280	0.920	125	0.1300	W24	
M0280SC250	2500	280	4500	100 x 10^3	2.80	610	1000	150	1.280	0.920	125	0.1300	W24	
M0280RJ200	2000	280	4500	100 x 10^3	2.80	610	1000	150	1.280	0.920	125	0.1300	W22	
M0280RJ250	2500	280	4500	100 x 10^3	2.80	610	1000	150	1.280	0.920	125	0.1300	W22	
M0280SJ200	2000	280	4500	100 x 10^3	2.80	610	1000	150	1.280	0.920	125	0.1300	W22	
M0280SJ250	2500	280	4500	100 x 10^3	2.80	610	1000	150	1.280	0.920	125	0.1300	W22	
M0334RC120	1200	334	4500	101 x 10^3	3.50	290	550	40	1.000	0.740	125	0.1300	W24	
M0334RC200	2000	334	4500	101 x 10^3	3.50	290	550	40	1.000	0.740	125	0.1300	W24	W23 Weight 250 g
M0334SC120	1200	334	4500	101 x 10^3	3.50	290	550	40	1.000	0.740	125	0.1300	W24	
M0334SC200	2000	334	4500	101 x 10^3	3.50	290	550	40	1.000	0.740	125	0.1300	W24	
M0334RJ120	1200	334	4500	101 x 10^3	3.50	290	550	40	1.000	0.740	125	0.1300	W22	
M0334RJ200	2000	334	4500	101 x 10^3	3.50	290	550	40	1.000	0.740	125	0.1300	W22	
M0334SJ120	1200	334	4500	101 x 10^3	3.50	290	550	40	1.000	0.740	125	0.1300	W22	
M0334SJ200	2000	334	4500	101 x 10^3	3.50	290	550	40	1.000	0.740	125	0.1300	W22	
M0336RA120	1200	336	4500	101 x 10^3	3.00	140	550	40	1.020	0.700	125	0.1300	W23	
M0336RA140	1400	336	4500	101 x 10^3	3.00	140	550	40	1.020	0.700	125	0.1300	W23	
M0336SA120	1200	336	4500	101 x 10^3	3.00	140	550	40	1.020	0.700	125	0.1300	W23	
M0336SA140	1400	336	4500	101 x 10^3	3.00	140	550	40	1.020	0.700	125	0.1300	W23	W24 Weight 250 g

Capsule Types

Part No.	V_{RRM}	I_{FAV}	I_{FSM}	I^2t	Typ. Reverse Recovery				V_{T0}	r_T	T_{JM}	R_{thJK}	Fig. No.	Package style
		T_K = 55°C	10 ms ½ sine V_R - ≤ 60% V_{RRM}		T_{JM}				@T_{JM}			d.c. 180° sine		Outlines on pages O-01...O-30
					t_{rr}	Q_{rr}	@I_{FM}	@ $-di_F/dt$						
	V	A	A	A^2s	µs	µC	A	A/µs	V	mΩ	°C	K/W		
M0225YH360	3600	225	2000	20 x 10³	3.00	220	550	40	1.900	4.160	150	0.1000	W3	
M0225YH450	4500	225	2000	20 x 10³	3.00	220	550	40	1.900	4.160	150	0.1000	W3	
M0310YH300	3000	310	4590	105 x 10³	2.80	275	1000	100	1.490	2.060	150	0.1000	W3	
M0310YH350	3500	310	4590	105 x 10³	2.80	275	1000	100	1.490	2.060	150	0.1000	W3	
M0347WC200	2000	347	4250	90.3 x 10³	2.80	210	550	40	1.210	1.200	125	0.0900	W1	
M0347WC250	2500	347	4250	90.3 x 10³	2.80	210	550	40	1.210	1.200	125	0.0900	W1	
M0358WC120	1200	358	2450	30 x 10³	1.40	125	1000	100	1.460	0.800	125	0.0900	W1	W1 Weight 70 g
M0358WC180	1800	358	2450	30 x 10³	1.40	125	1000	100	1.460	0.800	125	0.0900	W1	
M0367WC220	2200	367	4500	101 x 10³	3.30	300	550	40	1.280	0.920	125	0.0900	W1	
M0367WC280	2800	367	4500	101 x 10³	3.30	300	550	40	1.280	0.920	125	0.0900	W1	
M0371YH350	3500	371	4900	120 x 10³	3.20	1260	1000	200	1.050	1.650	150	0.1000	W3	
M0371YH450	4500	371	4900	120 x 10³	3.20	1260	1000	200	1.050	1.650	150	0.1000	W3	
M0433WC120	1200	433	4500	101 x 10³	3.50	270	550	40	1.000	0.740	125	0.0900	W1	
M0433WC160	1600	433	4500	101 x 10³	3.50	270	550	40	1.000	0.740	125	0.0900	W1	W2 Weight 80 g
M0433WC200	2000	433	4500	101 x 10³	3.50	270	550	40	1.000	0.740	125	0.0900	W1	
M0437WC080	800	437	4500	101 x 10³	3.00	75	550	40	1.020	0.700	125	0.0900	W1	
M0437WC140	1400	437	4500	101 x 10³	3.00	75	550	40	1.020	0.700	125	0.0900	W1	
M0659LC400	4000	659	7620	290 x 10³	4.20	800	1000	60	1.710	0.925	125	0.0330	W4	
M0659LC450	4500	659	7620	290 x 10³	4.20	800	1000	60	1.710	0.925	125	0.0330	W4	
M0710LC560	5600	710	8400	353 x 10³	4.00	2100	1000	200	1.450	0.875	125	0.0330	W4	
M0710LC600	6000	710	8400	353 x 10³	4.00	2100	1000	200	1.450	0.875	125	0.0330	W4	
M0736LC400	4000	736	9000	405 x 10³	5.20	1250	1000	60	1.606	0.700	125	0.0330	W4	W3 Weight 140 g
M0736LC450	4500	736	9000	405 x 10³	5.20	1250	1000	60	1.606	0.700	125	0.0330	W4	
M0759YC120	1200	759	9500	450 x 10³	2.00	80	550	50	1.130	0.380	125	0.0500	W2	
M0759YC160	1600	759	9500	450 x 10³	2.00	80	550	50	1.130	0.380	125	0.0500	W2	
M0759YH120	1200	759	9500	450 x 10³	2.00	80	550	50	1.130	0.380	125	0.0500	W3	
M0759YH160	1600	759	9500	450 x 10³	2.00	80	550	50	1.130	0.380	125	0.0500	W3	
M0859LC140	1400	859	10000	500 x 10³	3.00	280	800	50	1.170	0.320	125	0.0440	W4	
M0859LC160	1600	859	10000	500 x 10³	3.00	280	800	50	1.170	0.320	125	0.0440	W4	
M0863LC260	2600	863	10000	500 x 10³	4.80	950	1000	60	1.308	0.538	125	0.0330	W4	
M0863LC300	3000	863	10000	500 x 10³	4.80	950	1000	60	1.308	0.538	125	0.0330	W4	
M0863LC360	3600	863	10000	500 x 10³	4.80	950	1000	60	1.308	0.538	125	0.0330	W4	W4 Weight 340 g
M0872LC140	1400	872	10000	500 x 10³	4.00	700	1000	60	1.090	0.340	125	0.0440	W4	
M0872LC180	1800	872	10000	500 x 10³	4.00	700	1000	60	1.090	0.340	125	0.0440	W4	
M0872LC210	2100	872	10000	500 x 10³	4.00	700	1000	60	1.090	0.340	125	0.0440	W4	
M0955LC200	2000	955	11700	684 x 10³	3.40	500	1000	60	1.440	0.330	125	0.0330	W4	
M0955LC250	2500	955	11700	684 x 10³	3.40	500	1000	60	1.440	0.330	125	0.0330	W4	
M0955JK200	2000	1105	11700	684 x 10³	3.40	500	1000	60	1.440	0.330	125	0.0270	W113	
M0955JK250	2500	1105	11700	684 x 10³	3.40	500	1000	60	1.440	0.330	125	0.0270	W113	
M1022LC120	1200	1022	14000	980 x 10³	3.00	375	1000	60	1.240	0.330	125	0.0330	W4	W113 Weight 200 g
M1022LC160	1600	1022	14000	980 x 10³	3.00	375	1000	60	1.240	0.330	125	0.0330	W4	
M1022LC200	2000	1022	14000	980 x 10³	3.00	375	1000	60	1.240	0.330	125	0.0330	W4	

Capsule Types

Part No.	V_{RRM}	I_{FAV}	I_{FSM}	I^2t	Typ. Reverse Recovery				V_{T0}	r_T	T_{JM}	R_{thJK}	Fig. No.
		T_K = 55°C	10 ms ½ sine V_R - ≤ 60% V_{RRM}		T_{JM}				@T_{JM}			d.c. 180° sine	
					t_{rr}	Q_{rr}	@I_{FM}	@ $-di_F/dt$					
	V	A	A	A^2s	µs	µC	A	A/µs	V	mΩ	°C	K/W	
M1080LC100	1000	1080	13500	910 x 10^3	1.90	85	1000	60	1.125	0.314	125	0.0330	W4
M1080LC120	1200	1080	13500	910 x 10^3	1.90	85	1000	60	1.125	0.314	125	0.0330	W4
M1102NC500	5000	1102	13000	845 x 10^3	5.50	3300	1000	200	1.360	0.557	125	0.0220	W5
M1102NC600	6000	1102	13000	845 x 10^3	5.50	3300	1000	200	1.360	0.557	125	0.0220	W5
M1102ND500	5000	1102	13000	845 x 10^3	5.50	3300	1000	200	1.360	0.557	125	0.0220	W37
M1102ND600	6000	1102	13000	845 x 10^3	5.50	3300	1000	200	1.360	0.557	125	0.0220	W37
M1104NC400	4000	1104	13000	845 x 10^3	6.00	2100	1000	60	1.370	0.553	125	0.0220	W5
M1104NC450	4500	1104	13000	845 x 10^3	6.00	2100	1000	60	1.370	0.553	125	0.0220	W5
M1104ND400	4000	1104	13000	845 x 10^3	6.00	2100	1000	60	1.370	0.553	125	0.0220	W37
M1104ND450	4500	1104	13000	845 x 10^3	6.00	2100	1000	60	1.370	0.553	125	0.0220	W37
M1242NC260	2600	1242	16400	1.34 x 10^6	6.00	1500	1000	60	1.270	0.420	125	0.0220	W5
M1242NC360	3600	1242	16400	1.34 x 10^6	6.00	1500	1000	60	1.270	0.420	125	0.0220	W5
M1242ND260	2600	1242	16400	1.34 x 10^6	6.00	1500	1000	60	1.270	0.420	125	0.0220	W37
M1242ND360	3600	1242	16400	1.34 x 10^6	6.00	1500	1000	60	1.270	0.420	125	0.0220	W37
M1494NC160	1600	1494	19600	1.92 x 10^6	3.90	815	1000	60	1.150	0.265	125	0.0220	W5
M1494NC250	2500	1494	19600	1.92 x 10^6	3.90	815	1000	60	1.150	0.265	125	0.0220	W5
M1494ND160	1600	1494	19600	1.92 x 10^6	3.90	815	1000	60	1.150	0.265	125	0.0220	W37
M1494ND250	2500	1494	19600	1.92 x 10^6	3.90	815	1000	60	1.150	0.265	125	0.0220	W37
M1494NK160	1600	1975	19600	1.92 x 10^6	3.90	815	1000	60	1.150	0.265	125	0.0145	WD8
M1494NK250	2500	1975	19600	1.92 x 10^6	3.90	815	1000	60	1.150	0.265	125	0.0145	WD8
M1565VC360	3600	1565	19700	1.94 x 10^6	5.00	2800	1000	200	1.090	0.360	125	0.0180	W6
M1565VC400	4000	1565	19700	1.94 x 10^6	5.00	2800	1000	200	1.090	0.360	125	0.0180	W6
M1565VC450	4500	1565	19700	1.94 x 10^6	5.00	2800	1000	200	1.090	0.360	125	0.0180	W6
M1565VF360	3600	1565	19700	1.94 x 10^6	5.00	2800	1000	200	1.090	0.360	125	0.0180	W43
M1565VF400	4000	1565	19700	1.94 x 10^6	5.00	2800	1000	200	1.090	0.360	125	0.0180	W43
M1565VF450	4500	1565	19700	1.94 x 10^6	5.00	2800	1000	200	1.090	0.360	125	0.0180	W43
M1858NC120	1200	1858	25000	3.25 x 10^6	2.50	120	1000	60	1.127	0.127	125	0.0220	W5
M1858NC160	1600	1858	25000	3.25 x 10^6	2.50	120	1000	60	1.127	0.127	125	0.0220	W5
M1858ND120	1200	1858	25000	3.25 x 10^6	2.50	120	1000	60	1.127	0.127	125	0.0220	W37
M1858ND160	1600	1858	25000	3.25 x 10^6	2.50	120	1000	60	1.127	0.127	125	0.0220	W37
M2322ZC300	3000	2322	23000	2.64 x 10^6	6.50	3200	1000	150	1.670	0.186	125	0.0110	W7
M2322ZC400	4000	2322	23000	2.64 x 10^6	6.50	3200	1000	150	1.670	0.186	125	0.0110	W7
M2322ZD300	3000	2322	23000	2.64 x 10^6	6.50	3200	1000	150	1.670	0.186	125	0.0110	W42
M2322ZD400	4000	2322	23000	2.64 x 10^6	6.50	3200	1000	150	1.670	0.186	125	0.0110	W42
M2413VC200	2000	2413	32000	5.12 x 10^6	5.00	2500	1000	200	1.090	0.121	125	0.0160	W6
M2413VC250	2500	2413	32000	5.12 x 10^6	5.00	2500	1000	200	1.090	0.121	125	0.0160	W6
M2413VF200	2000	2413	32000	5.12 x 10^6	5.00	2500	1000	200	1.090	0.121	125	0.0160	W43
M2413VF250	2500	2413	32000	5.12 x 10^6	5.00	2500	1000	200	1.090	0.121	125	0.0160	W43

Package style

Outlines on pages O-01...O-30

W5 Weight 510 g

W6 Weight 1000 g

W37 Weight 510 g

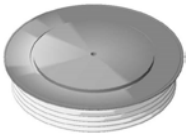

W42 Weight 1200 g

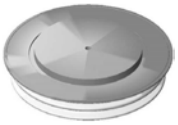

W43 Weight 800 g

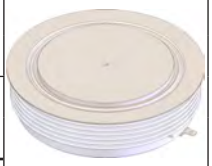

W108 Weight 2.1 kg

W113 Weight 200 g

WD8 Weight 250 g

Extra Fast Recovery Diodes

These products are designed to offer the lowest practical values of reverse recovery current whilst offering wide safe operating area and high di/dt capability required by modern switching components.

Capsule Types

Part No.	V_{RRM}	I_{FAV}	I_{FSM}	I^2t	Typ. Reverse Recovery					V_{T0}	r_T	T_{JM}	R_{thJK}	Fig. No.
		T_K = 55°C	10 ms ½ sine V_R - ≤ 60% V_{RRM}		T_{JM}					@T_{JM}			d.c. 180° sine	
					I_{rm}	t_{rr}	Q_{rr}	@I_{FM}	@ $-di_F/dt$					
	V	A	A	A^2s	A	µs	µC	A	A/µs	V	mΩ	°C	K/W	
F0240YC250	2500	240	3100	48.1×10^3	40	2.00	100	550	40	2.271	2.853	150	0.1000	W2
F0240YC300	3000	240	3100	48.1×10^3	40	2.00	100	550	40	2.271	2.853	150	0.1000	W2
F0240YH250	2500	240	3100	48.1×10^3	40	2.00	100	550	40	2.271	2.853	150	0.1000	W3
F0240YH300	3000	240	3100	48.1×10^3	40	2.00	100	550	40	2.271	2.853	150	0.1000	W3
F0300WC140	1400	240	2700	36.5×10^3	530	3.00	70	550	40	1.760	2.210	125	0.0950	W1
F0300WC180	1800	240	2700	36.5×10^3	530	3.00	70	550	40	1.760	2.210	125	0.0950	W1
F0800LC140	1400	775	7630	291×10^3	380	1.10	200	1000	200	1.494	0.692	125	0.0320	W4
F0800LC180	1800	775	7630	291×10^3	380	1.10	200	1000	200	1.494	0.692	125	0.0320	W4
F0900VC450	4500	816	10450	546×10^3	120	3.80	230	1000	60	2.024	1.274	115	0.0160	W6
F0900VC520	5200	816	10450	546×10^3	120	3.80	230	1000	60	2.024	1.274	115	0.0160	W6
F0900VF450	4500	816	10450	546×10^3	120	3.80	230	1000	60	2.024	1.274	115	0.0160	W43
F0900VF520	5200	816	10450	546×10^3	120	3.80	230	1000	60	2.024	1.274	115	0.0160	W43
F1000LC080	800	826	8500	361×10^3	320	1.60	250	1000	800	1.530	0.547	125	0.0320	W4
F1000LC120	1200	826	8500	361×10^3	320	1.60	250	1000	800	1.530	0.547	125	0.0320	W4
F1300NC45P	4500	1346	20800	2.16×10^6	470	4.30	2150	1000	200	1.569	0.318	140	0.0240	W5
F1300NC50P	5000	1346	20800	2.16×10^6	470	4.30	2150	1000	200	1.569	0.318	140	0.0240	W5
F1300NC55P	5500	1346	20800	2.16×10^6	470	4.30	2150	1000	200	1.569	0.318	140	0.0240	W5
F1300NH45P	4500	1346	20800	2.16×10^6	470	4.30	2150	1000	200	1.569	0.318	140	0.0240	W47
F1300NH50P	5000	1346	20800	2.16×10^6	470	4.30	2150	1000	200	1.569	0.318	140	0.0240	W47
F1300NH55P	5500	1346	20800	2.16×10^6	470	4.30	2150	1000	200	1.569	0.318	140	0.0240	W47
F1400NC140	1400	1093	17250	1.49×10^6	800	1.50	1000	1400	1000	1.618	0.388	125	0.0240	W5
F1400NC180	1800	1093	17250	1.49×10^6	800	1.50	1000	1400	1000	1.618	0.388	125	0.0240	W5
F1400ND140	1400	1093	17250	1.49×10^6	800	1.50	1000	1400	1000	1.618	0.388	125	0.0240	W37
F1400ND180	1800	1093	17250	1.49×10^6	800	1.50	1000	1400	1000	1.618	0.388	125	0.0240	W37
F1500NC200	2000	1054	13750	950×10^3	1065	1.50	1500	1500	2000	1.372	0.535	125	0.0240	W5
F1500NC250	2500	1054	13750	950×10^3	1065	1.50	1500	1500	2000	1.372	0.535	125	0.0240	W5
F1600NC080	800	1326	20000	2.0×10^6	480	2.30	700	1600	800	1.320	0.268	125	0.0240	W5
F1600NC120	1200	1326	20000	2.0×10^6	480	2.30	700	1600	800	1.320	0.268	125	0.0240	W5

Outlines on pages O-01...O-30

W1 Weight 70 g

W2 Weight 80 g

W3 Weight 140 g

W4 Weight 340 g

W5 Weight 510 g

W6 Weight 1000 g

W37 Weight 510 g

W43 Weight 800 g

W47 Weight 250 g

High Power Sonic FRD's

IXYS UK brings you a world-leading class of ultra fast and ultra soft recovery diode available from 2.5kV to 6.5kV in current ratings from 170 to 4000A. These diodes incorporate a unique manufacturing process and lifetime control to offer a class leading trade-off between conduction and switching loses. The wide safe operating area (SOA) makes them ideal as freewheeling diodes for snubberless IGBT and IGCT applications. In fact, any application which requires a fast, low loss diode. For example, traction, medium voltage drives, induction heating and pulsed power applications.

Capsule Types

Part No.	V_{RRM}	I_{FAV}	I_{FSM}	I^2t	Typ. Reverse Recovery					V_{T0}	r_T	T_{JM}	R_{thJK}	Fig. No.
		T_K = 55°C	10 ms ½ sine $V_R \leq 60\%\ V_{RRM}$		I_{rm}	t_{rr}	T_{JM} Q_{rr}	@ I_{FM}	@ $-di_F/dt$	@T_{JM}			180° Sine	
○ Not for new design ➢ New	V	A	A	A^2s	A	µs	µC	A	A/µs	V	mΩ	°C	K/W	
○ **E0170YH45C ***	4500	210	1390	9.67×10^3	125	1.60	280	170	300	2.580	7.170	150	0.073	W3
E0280YH25C	2500	350	2330	27.1×10^3	380	1.30	500	280	1000	1.410	2.600	150	0.073	W3
E0330MF65F	6500	277	2790	38.9×10^3	400	1.20	550	330	1000	1.890	5.800	125	0.043	W99
➢ **E0460QC45E**	4500	550	5800	168×10^3	450	1.00	900	500	150	2.160	3.050	140	0.028	W68
○ **E0460QC45C ***	4500	532	5750	165×10^3	450	1.00	900	500	1500	2.150	3.040	150	0.029	W68
○ **E0660NC45C ***	4500	765	7318	268×10^3	600	1.50	960	660	1000	2.000	2.236	150	0.020	W5
○ **E0660NH45C ***	4500	765	7318	268×10^3	600	1.50	960	660	1000	2.000	2.236	150	0.020	W47
E0770HF65F	6500	632	6418	206×10^3	900	1.20	1200	770	2000	1.890	2.538	125	0.019	W100
E0800QC25C	2500	960	10700	575×10^3	720	1.60	1420	800	1500	1.410	0.839	150	0.029	W68
E1000TF65F	6500	915	10400	537×10^3	650	1.80	1700	1000	1700	2.291	1.185	125	0.015	W97
E1200NC25C	2500	1338	13300	884×10^3	650	4.00	2000	1200	1500	1.305	0.678	150	0.020	W5
E1200NH25C	2500	1338	13300	884×10^3	650	4.00	2000	1200	1500	1.305	0.678	150	0.020	W47
○ **E1300VF45C ***	4500	1350	14000	1.08×10^6	1500	1.10	2150	1300	3000	2.310	0.930	150	0.013	W43
E1375EF65F	6500	1125	12180	742×10^3	1600	1.10	2100	1375	3500	1.890	1.423	125	0.011	W101
E1500NC36P	3600	1280	17050	1.45×10^6	1425	2.80	2750	1000	1000	1.417	0.656	140	0.019	W5
E1500NC42P	4200	1280	17050	1.45×10^6	1425	2.80	2750	1000	1000	1.417	0.656	140	0.019	W5
E1500NC48P	4800	1280	17050	1.45×10^6	1425	2.80	2750	1000	1000	1.417	0.656	140	0.019	W5
E1500NH36P	3600	1280	17050	1.45×10^6	1425	2.80	2750	1000	1000	1.417	0.656	140	0.019	W47
E1500NH42P	4200	1280	17050	1.45×10^6	1425	2.80	2750	1000	1000	1.417	0.656	140	0.019	W47
E1500NH48P	4800	1280	17050	1.45×10^6	1425	2.80	2750	1000	1000	1.417	0.656	140	0.019	W47
➢ **E1800TC45E**	4500	2209	34100	5.81×10^6	1645	1.35	3200	1800	3000	2.067	0.605	140	0.008	W28
E2060FF65F	6500	1690	20090	2.02×10^6	2050	1.10	2800	2060	4500	1.890	0.951	125	0.007	W105
○ **E2250VF25C ***	2500	2426	25200	3.17×10^6	1650	1.90	3700	2250	2500	1.510	0.250	150	0.013	W43
➢ **E2400EC45E**	4500	2655	39500	7.80 x 106	1816	1.30	3540	2400	3000	2.150	0.580	140	0.006	W111
E2400TC45C	4500	2233	25600	3.29×10^6	2050	1.50	3700	2400	3000	2.060	0.590	150	0.008	W28
➢ **E3000EC45E**	4500	3005	42400	8.98×10^6	2630	1.40	5500	3000	5000	2.240	0.550	140	0.005	W111
E4000TC25C	2500	4080	50000	12.5×10^6	2480	2.50	6700	4000	3500	1.406	0.149	150	0.008	W28

***** Consult factory for new products

Outlines on pages O-01...O-30

W3 Weight 140 g

W5 Weight 510 g

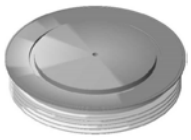
W28 Weight 1230 g

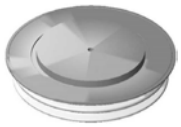
W43 Weight 800 g

W47 Weight 250 g

W68 Weight 300 g

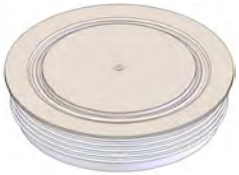
W97 Weight 1000 g

W100 Weight 600 g

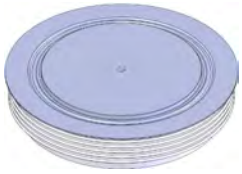
W101 Weight 1500 g

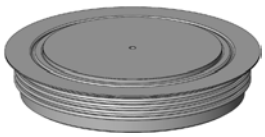
W105 Weight 2300 g

W111 Weight 1600 g

Phase Control Thyristors

IXYS UK provides one of the most comprehensive ranges of standard phase control thyristors in the industry. Devices with voltage ranges from 400V to 6500V are available, making them suitable for applications with line voltages from 230V to over 1000V (higher voltage applications are now served by our range of Medium Voltage Thyristors). IXYS UK Westcode Ltd. is a leading supplier of phase control products into demanding markets such as industrial DC drives, controlled rectifiers, marine/rail propulsion systems, wind power converters, electrochemical power supplies and soft starters. These devices are optimised to give low conduction losses and are primarily intended for applications with line frequencies up to 400Hz.

The Wespack outline (WPxx) is an innovative concept in phase control thyristors for applications requiring devices rated to 2200V. It gives the maximum power rating for weight and volume without compromising on quality and reliability. It also gives the maximum current rating and lowest thermal resistance for the package size.

The newest additions to IXYS UK's phase control thyristor range are the 96mm diameter die capsules. These devices are constructed using low temperature sintering technology offering better thermal and electromechanical capability and are available with current ratings up to 6405A and voltage ratings up to 4500V.

Stud Types

Part No.	V_{DRM} V_{RRM}	I_{TAV} T_C = 55°C	I_{TSM} 10 ms ½ sine V_R - ≤ 60% V_{RRM}	I^2t	V_{T0} @T_{JM}	r_T	T_{JM}	R_{thJC} d.c. 180° sine	R_{thJC} 120° Rect.	Fig. No.
	V	A	A	A^2s	V	mΩ	°C	K/W	K/W	
N0180SH120	1200	180	2450	30.0 x 10^3	0.900	1.790	125	0.2300	0.2800	W17
N0180SH160	1600	180	2450	30.0 x 10^3	0.900	1.790	125	0.2300	0.2800	W17
N0335SC120	1200	335	4650	108 x 10^3	0.920	0.990	125	0.1200	0.1400	W18
N0335SC160	1600	335	4650	108 x 10^3	0.920	0.990	125	0.1200	0.1400	W18
N0416SC040	400	416	6000	180 x 10^3	0.850	0.535	125	0.1200	0.1400	W18
N0416SC080	800	416	6000	180 x 10^3	0.850	0.535	125	0.1200	0.1400	W18

Outlines on pages
O-01...O-30

W17 Weight 130 g

W18 Weight 280 g

Phase Control Thyristors

Capsule Types

Part No.	V_{DRM} V_{RRM}	I_{TAV} T_K = 55°C	I_{TSM} 10 ms ½ sine V_R - ≤ 60% V_{RRM}	I^2t	V_{T0} @T_{JM}	r_T	T_{JM}	R_{thJK} 180° Sine	R_{thJK} 120° Rect.	Fig. No.	Package style Outlines on pages O-01...O-30
	V	A	A	A^2s	V	mΩ	°C	K/W	K/W		
N0465WN140	1400	465	4500	101 x 10^3	0.900	0.850	125	0.0800	0.0912	W90	
N0465WN160	1600	465	4500	101 x 10^3	0.900	0.850	125	0.0800	0.0912	W90	
N0530YN220	2200	530	6300	198 x 10^3	1.100	1.250	125	0.0480	0.0494	W91	
N0530YN250	2500	530	6300	198 x 10^3	1.100	1.250	125	0.0480	0.0494	W91	
N0616LC400	4000	616	5250	138 x 10^3	1.220	1.530	125	0.0320	0.0393	W10	
N0616LC450	4500	616	5250	138 x 10^3	1.220	1.530	125	0.0320	0.0393	W10	
N0634LC380	3800	634	7000	245 x 10^3	1.100	1.500	125	0.0320	0.0393	W10	
N0634LC420	4200	634	7000	245 x 10^3	1.100	1.500	125	0.0320	0.0393	W10	
N0646LC300	3000	646	5700	162 x 10^3	1.210	1.360	125	0.0320	0.0393	W10	W10 Weight 340 g
N0646LC360	3600	646	5700	162 x 10^3	1.210	1.360	125	0.0320	0.0393	W10	
N0795YN140	1400	795	9450	444 x 10^3	0.950	0.450	125	0.0480	0.0494	W91	
N0795YN180	1800	795	9450	444 x 10^3	0.950	0.450	125	0.0480	0.0494	W91	
N0882NC400	4000	882	7700	296 x 10^3	1.300	0.920	125	0.0240	0.0273	W11	
N0882NC450	4500	882	7700	296 x 10^3	1.300	0.920	125	0.0240	0.0273	W11	
N0910LC200	2000	910	9200	423 x 10^3	1.040	0.606	125	0.0320	0.0393	W10	
N0910LC260	2600	910	9200	423 x 10^3	1.040	0.606	125	0.0320	0.0393	W10	
N1010NC300	3000	1010	12100	732 x 10^3	1.170	0.687	125	0.0240	0.0273	W11	
N1010NC380	3800	1010	12100	732 x 10^3	1.170	0.687	125	0.0240	0.0273	W11	
N1075LN180	1800	1240	15750	1.24 x 10^6	0.850	0.320	130	0.0330	0.0371	W92	W11 Weight 510 g
N1132NC300	3000	1132	14300	1.02 x 10^6	1.150	0.510	125	0.0240	0.0271	W11	
N1132NC360	3600	1132	14300	1.02 x 10^6	1.150	0.510	125	0.0240	0.0271	W11	
N1140LN140	1400	1315	17500	1.53 x 10^6	0.820	0.280	130	0.0330	0.0371	W92	
N1159NC380	3800	1159	14500	1.05 x 10^6	1.100	0.574	125	0.0220	0.0255	W11	
N1159NC420	4200	1159	14500	1.05 x 10^6	1.100	0.574	125	0.0220	0.0255	W11	
N1174JK200	2000	1174	13200	870 x 10^3	1.000	0.416	125	0.0270	0.0314	WP1	
N1174JK220	2200	1174	13200	870 x 10^3	1.000	0.416	125	0.0270	0.0314	WP1	
N1263JK160	1600	1263	15000	1.13 x 10^6	1.015	0.332	125	0.0270	0.0314	WP1	
N1263JK180	1800	1263	15000	1.13 x 10^6	1.015	0.332	125	0.0270	0.0314	WP1	
N1351VC400 *	4000	1351	17500	1.53 x 10^6	1.200	0.553	125	0.0170	0.0206	W12	W12 Weight 1000 g
N1351VC450 *	4500	1351	17500	1.53 x 10^6	1.200	0.553	125	0.0170	0.0206	W12	
N1351VF400 *	4000	1351	17500	1.53 x 10^6	1.200	0.553	125	0.0170	0.0206	W62	
N1351VF450 *	4500	1351	17500	1.53 x 10^6	1.200	0.553	125	0.0170	0.0206	W62	
N1366JK080	800	1366	15900	1.26 x 10^6	0.985	0.270	125	0.0270	0.0314	WP1	
N1366JK120	1200	1366	15900	1.26 x 10^6	0.985	0.270	125	0.0270	0.0314	WP1	
N1366JK140	1400	1366	15900	1.26 x 10^6	0.985	0.270	125	0.0270	0.0314	WP1	
N1449QL200	2000	1410	17300	1.50 x 10^6	1.060	0.317	125	0.0230	0.0272	WP6	
N1449QL220	2200	1410	17300	1.50 x 10^6	1.060	0.317	125	0.0230	0.0272	WP6	
N1467NC200	2000	1467	21500	2.31 x 10^6	1.000	0.272	125	0.0240	0.0271	W11	W13 Weight 1700 g
N1467NC260	2600	1467	21500	2.31 x 10^6	1.000	0.272	125	0.0240	0.0271	W11	
N1547NC160	1600	1547	23300	2.71 x 10^6	0.920	0.252	125	0.0240	0.0271	W11	
N1547NC200	2000	1547	23300	2.71 x 10^6	0.920	0.252	125	0.0240	0.0271	W11	
N1581QL160	1600	1535	19100	1.82 x 10^6	1.022	0.253	125	0.0230	0.0270	WP6	
N1581QL180	1800	1535	19100	1.82 x 10^6	1.022	0.253	125	0.0230	0.0270	WP6	
N1651QK200	2000	1651	17300	1.50 x 10^6	1.060	0.317	125	0.0180	0.0217	WP2	
N1651QK220	2200	1651	17300	1.50 x 10^6	1.060	0.317	125	0.0180	0.0217	WP2	
N1661VC300 *	3000	1661	23000	2.65 x 10^6	1.040	0.350	125	0.0170	0.0206	W12	
N1661VC360 *	3600	1661	23000	2.65 x 10^6	1.040	0.350	125	0.0170	0.0206	W12	
N1661VF300 *	3000	1661	23000	2.65 x 10^6	1.040	0.350	125	0.0170	0.0206	W62	W15 Weight 2800 g
N1661VF360 *	3600	1661	23000	2.65 x 10^6	1.040	0.350	125	0.0170	0.0206	W62	

***** Please consult factory for alternative products

Phase Control Thyristors

Capsule Types

Part No.	V_{DRM} V_{RRM} V	I_{TAV} T_K = 55°C A	I_{TSM} 10 ms ½ sine V_R - ≤ 60% V_{RRM} A	I^2t A^2s	V_{T0} @T_{JM} V	r_T mΩ	T_{JM} °C	R_{thJK} 180° Sine K/W	120° Rect. K/W	Fig. No.	Package style Outlines on pages O-01...O-30
N1718NC120	1200	1718	27200	3.70×10^6	0.979	0.169	125	0.0240	0.0271	W11	
N1718NC180	1800	1718	27200	3.70×10^6	0.979	0.169	125	0.0240	0.0271	W11	
N1718NC200	2000	1718	27200	3.70×10^6	0.979	0.169	125	0.0240	0.0271	W11	
N1725MC320	3200	1725	20000	2.00×10^6	1.020	0.396	125	0.015	0.0165	W70	
N1725MC360	3600	1725	20000	2.00×10^6	1.020	0.396	125	0.015	0.0165	W70	
N1802NC120	1200	1802	29600	4.38×10^6	0.855	0.171	125	0.0240	0.0271	W11	
N1802NC160	1600	1802	29600	4.38×10^6	0.855	0.171	125	0.0240	0.0271	W11	
N1806QK160	1600	1806	19100	1.82×10^6	1.022	0.253	125	0.0180	0.0217	WP2	
N1806QK180	1800	1806	19100	1.82×10^6	1.022	0.253	125	0.0180	0.0217	WP2	
N1817QL080	800	1760	22000	2.42×10^6	0.955	0.177	125	0.0230	0.0272	WP6	
N1817QL120	1200	1760	22000	2.42×10^6	0.955	0.177	125	0.0230	0.0272	WP6	
N1817QL140	1400	1760	22000	2.42×10^6	0.955	0.177	125	0.0230	0.0272	WP6	
N2015ML200	2000	2015	32400	5.25×10^6	0.883	0.210	125	0.0180	0.0201	WP5	
N2015ML220	2200	2015	32400	5.25×10^6	0.883	0.210	125	0.0180	0.0201	WP5	
N2055MC260	2600	2105	25800	3.30×10^6	0.970	0.240	125	0.015	0.0165	W70	
N2055MC280	2800	2105	25800	3.30×10^6	0.970	0.240	125	0.015	0.0165	W70	
N2083QK080	800	2083	22000	2.42×10^6	0.955	0.177	125	0.0180	0.0217	WP2	
N2083QK120	1200	2083	22000	2.42×10^6	0.955	0.177	125	0.0180	0.0217	WP2	
N2083QK140	1400	2083	22000	2.42×10^6	0.955	0.177	125	0.0180	0.0217	WP2	
N2086NC060	600	2086	35000	6.13×10^6	0.840	0.108	125	0.0240	0.0271	W11	
N2086NC100	1000	2086	35000	6.13×10^6	0.840	0.108	125	0.0240	0.0271	W11	
N2154JK020	200	2154	22700	2.58×10^6	0.890	0.107	140	0.0270	0.0314	WP1	
N2154JK040	400	2154	22700	2.58×10^6	0.890	0.107	140	0.0270	0.0314	WP1	
N2154JK060	600	2154	22700	2.58×10^6	0.890	0.107	140	0.0270	0.0314	WP1	
N2172ZC400	4000	2172	28000	3.92×10^6	1.350	0.294	125	0.0110	0.0119	W13	
N2172ZC450	4500	2172	28000	3.92×10^6	1.350	0.294	125	0.0110	0.0119	W13	
N2172ZD400	4000	2172	28000	3.92×10^6	1.350	0.294	125	0.0110	0.0119	W46	
N2172ZD450	4500	2172	28000	3.92×10^6	1.350	0.294	125	0.0110	0.0119	W46	
N2191ML160	1600	2191	34500	5.95×10^6	0.940	0.154	125	0.0180	0.0201	WP5	
N2191ML180	1800	2191	34500	5.95×10^6	0.940	0.154	125	0.0180	0.0201	WP5	
N2367MK200	2000	2367	32400	5.25×10^6	0.883	0.210	125	0.0140	0.0157	WP3	
N2367MK220	2200	2367	32400	5.25×10^6	0.883	0.210	125	0.0140	0.0157	WP3	
N2418ZC300	3000	2418	30000	4.50×10^6	1.160	0.246	125	0.0110	0.0119	W13	
N2418ZC360	3600	2418	30000	4.50×10^6	1.160	0.246	125	0.0110	0.0119	W13	
N2418ZD300	3000	2418	30000	4.50×10^6	1.160	0.246	125	0.0110	0.0119	W46	
N2418ZD360	3600	2418	30000	4.50×10^6	1.160	0.246	125	0.0110	0.0119	W46	
N2520ML080	800	2520	38200	7.30×10^6	0.980	0.090	125	0.0180	0.0201	WP5	
N2520ML120	1200	2520	38200	7.30×10^6	0.980	0.090	125	0.0180	0.0201	WP5	
N2520ML140	1400	2520	38200	7.30×10^6	0.980	0.090	125	0.0180	0.0201	WP5	
N2543ZC240	2400	2543	32000	5.12×10^6	0.780	0.274	125	0.0110	0.0119	W13	
N2543ZC300	3000	2543	32000	5.12×10^6	0.780	0.274	125	0.0110	0.0119	W13	
N2543ZD240	2400	2543	32000	5.12×10^6	0.780	0.274	125	0.0110	0.0119	W46	
N2543ZD300	3000	2543	32000	5.12×10^6	0.780	0.274	125	0.0110	0.0119	W46	
N2593MK160	1600	2593	34500	5.95×10^6	0.940	0.154	125	0.0140	0.0157	WP3	
N2593MK180	1800	2593	34500	5.95×10^6	0.940	0.154	125	0.0140	0.0157	WP3	
N2600MC160	1600	2600	30000	4.50×10^6	0.950	0.130	125	0.015	0.0165	W70	
N2600MC180	1800	2600	30000	4.50×10^6	0.950	0.130	125	0.015	0.0165	W70	
N2825TE400	4000	2825	36900	6.81×10^6	1.210	0.270	125	0.0080	0.0085	W82	
N2825TE450	4500	2825	36900	6.81×10^6	1.210	0.270	125	0.0080	0.0085	W82	
N2825TJ400	4000	2825	36900	6.81×10^6	1.210	0.270	125	0.0080	0.0085	W81	
N2825TJ450	4500	2825	36900	6.81×10^6	1.210	0.270	125	0.0080	0.0085	W81	

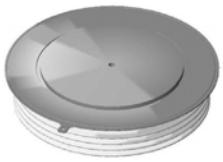

W46 Weight 1200 g

* Available with reduced height 25mm. refer to Chippenham Factory

W48 Weight 2000 g

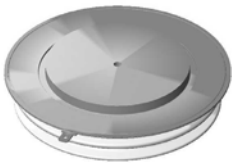

W62 Weight 1000 g

W70 Weight 550 g

W79 Weight 890 g

W80 Weight 1200 g

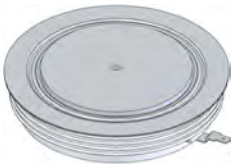

W81 Weight 1200 g

Capsule Types

Part No.	V_{DRM} V_{RRM} V	I_{TAV} T_K = 55°C A	I_{TSM} 10 ms ½ sine V_R - ≤ 60% V_{RRM} A	I^2t A²s	V_{T0} @T_{JM} V	r_T mΩ	T_{JM} °C	R_{thJK} 180° Sine K/W	120° Rect. K/W	Fig. No.	Package style Outlines on pages O-01...O-30
N2830HE260	2600	2830	36000	6.48 x 10⁶	0.930	0.150	125	0.0125	0.0138	W80	
N2830HE280	2800	2830	36000	6.48 x 10⁶	0.930	0.150	125	0.0125	0.0138	W80	
N2900QL020	200	2900	28000	3.92 x 10⁶	0.850	0.080	150	0.0230	0.0272	WP6	
N2900QL040	400	2900	28000	3.92 x 10⁶	0.850	0.080	150	0.0230	0.0272	WP6	
N2900QL060	600	2900	28000	3.92 x 10⁶	0.850	0.080	150	0.0230	0.0272	WP6	
N3012ZC200	2000	3012	45100	10.2 x 10⁶	0.920	0.160	125	0.0110	0.0119	W13	
N3012ZC260	2600	3012	45100	10.2 x 10⁶	0.920	0.160	125	0.0110	0.0119	W13	
N3012ZD200	2000	3012	45100	10.2 x 10⁶	0.920	0.160	125	0.0110	0.0119	W46	
N3012ZD260	2600	3012	45100	10.2 x 10⁶	0.920	0.160	125	0.0110	0.0119	W46	W82 Weight 1650 g
N3022MK080	800	3022	38200	7.30 x 10⁶	0.981	0.090	125	0.0140	0.0157	WP3	
N3022MK120	1200	3022	38200	7.30 x 10⁶	0.981	0.090	125	0.0140	0.0157	WP3	
N3022MK140	1400	3022	38200	7.30 x 10⁶	0.981	0.090	125	0.0140	0.0157	WP3	
N3029ZC240	2400	3029	38200	7.30 x 10⁶	0.947	0.154	125	0.0110	0.0119	W13	
N3029ZC280	2800	3029	38200	7.30 x 10⁶	0.947	0.154	125	0.0110	0.0119	W13	
N3029ZD240	2400	3029	38200	7.30 x 10⁶	0.947	0.154	125	0.0110	0.0119	W46	
N3029ZD280	2800	3029	38200	7.30 x 10⁶	0.947	0.154	125	0.0110	0.0119	W46	
N3165HA260	2600	3165	36000	6.48 x 10⁶	0.930	0.150	125	0.0105	0.0118	W79	
N3165HA280	2800	3165	36000	6.48 x 10⁶	0.930	0.150	125	0.0105	0.0118	W79	W90 Weight 90 g
N3175HE160	1600	3175	45500	10.40 x 10⁶	0.900	0.110	125	0.0125	0.0138	W80	
N3175HE180	1800	3175	45500	10.40 x 10⁶	0.900	0.110	125	0.0125	0.0138	W80	
N3229QK020	200	3229	28000	3.92 x 10⁶	0.926	0.067	140	0.0180	0.0217	WP2	
N3229QK040	400	3229	28000	3.92 x 10⁶	0.926	0.067	140	0.0180	0.0217	WP2	
N3229QK060	600	3229	28000	3.92 x 10⁶	0.926	0.067	140	0.0180	0.0217	WP2	
N3533ZC180	1800	3533	50000	12.50 x 10⁶	0.970	0.095	125	0.0110	0.0120	W13	W91 Weight 110 g
N3533ZC220	2200	3533	50000	12.50 x 10⁶	0.970	0.095	125	0.0110	0.0120	W13	
N3533ZD180	1800	3533	50000	12.50 x 10⁶	0.970	0.095	125	0.0110	0.0120	W46	
N3533ZD220	2200	3533	50000	12.50 x 10⁶	0.970	0.095	125	0.0110	0.0120	W46	
N3565HA160	1600	3565	45500	10.4 x 10⁶	0.900	0.110	125	0.0105	0.0118	W79	
N3565HA180	1800	3565	45500	10.4 x 10⁶	0.900	0.110	125	0.0105	0.0118	W79	
N3597ML020	200	3597	45400	10.3 x 10⁶	0.840	0.053	140	0.0180	0.0201	WP5	
N3597ML040	400	3597	45400	10.3 x 10⁶	0.840	0.053	140	0.0180	0.0201	WP5	W92 Weight 280 g
N3597ML060	600	3597	45400	10.3 x 10⁶	0.840	0.053	140	0.0180	0.0201	WP5	
N3790TE240	2400	3790	49500	12.3 x 10⁶	0.900	0.150	125	0.0080	0.0084	W82	
N3790TE280	2800	3790	49500	12.3 x 10⁶	0.900	0.150	125	0.0080	0.0084	W82	
N3790TJ240	2400	3790	49500	12.3 x 10⁶	0.900	0.150	125	0.0080	0.0084	W81	
N3790TJ280	2800	3790	49500	12.3 x 10⁶	0.900	0.150	125	0.0080	0.0084	W81	
N3880ZD160	1600	3880	59000	17.4 x 10⁶	0.986	0.068	125	0.0110	0.0119	W46	
N3880ZD180	1800	3880	59000	17.4 x 10⁶	0.986	0.068	125	0.0110	0.0119	W46	
N3904HK200	2000	3904	50900	12.95 x 10⁶	0.920	0.111	125	0.0090	0.0099	WP4	W107 Weight 1600 g
N3904HK220	2200	3904	50900	12.95 x 10⁶	0.920	0.111	125	0.0090	0.0099	WP4	
N3930ZC120	1200	3930	54000	14.6 x 10⁶	0.841	0.080	125	0.0110	0.0119	W13	
N3930ZC160	1600	3930	54000	14.6 x 10⁶	0.841	0.080	125	0.0110	0.0119	W13	
N3930ZD120	1200	3930	54000	14.6 x 10⁶	0.841	0.080	125	0.0110	0.0119	W46	
N3930ZD160	1600	3930	54000	14.6 x 10⁶	0.841	0.080	125	0.0110	0.0119	W46	
N4085ZC080	800	4085	64000	20.5 x 10⁶	0.850	0.070	125	0.0110	0.0119	W13	
N4085ZC120	1200	4085	64000	20.5 x 10⁶	0.850	0.070	125	0.0110	0.0119	W13	
N4085ZD080	800	4085	64000	20.5 x 10⁶	0.850	0.070	125	0.0110	0.0119	W46	W108 Weight 2100 g
N4085ZD120	1200	4085	64000	20.5 x 10⁶	0.850	0.070	125	0.0110	0.0119	W46	

Capsule Types

Part No.	V_{DRM} V_{RRM}	I_{TAV} T_K = 55°C	I_{TSM} 10 ms ½ sine V_R - ≤ 60% V_{RRM}	I^2t	V_{T0} @T_{JM}	r_T @T_{JM}	T_{JM}	R_{thJK} 180° Sine	R_{thJK} 120° Rect.	Fig. No.	Package style Outlines on pages O-01...O-30
➢ New	V	A	A	A^2s	V	mΩ	°C	K/W	K/W		
➢ **N4165EE400**	4000	4165	56000	15.7 x 10^6	0.977	0.177	125	0.0060	0.00639	W108	
➢ **N4165EE450**	4500	4165	56000	15.7 x 10^6	0.977	0.177	125	0.0060	0.00639	W108	
N4316MK020	200	4316	45400	10.3 x 10^6	0.840	0.053	140	0.0140	0.0157	WP3	
N4316MK040	400	4316	45400	10.3 x 10^6	0.840	0.053	140	0.0140	0.0157	WP3	
N4316MK060	600	4316	45400	10.3 x 10^6	0.840	0.053	140	0.0140	0.0157	WP3	
N4340TE180	1800	4340	55000	15.1 x 10^6	0.886	0.105	125	0.0080	0.0085	W82	
N4340TE220	2200	4340	55000	15.1 x 10^6	0.886	0.105	125	0.0080	0.0085	W82	
N4340TJ180	1800	4340	55000	15.1 x 10^6	0.886	0.105	125	0.0080	0.0085	W81	
N4340TJ220	2200	4340	55000	15.1 x 10^6	0.886	0.105	125	0.0080	0.0085	W81	
N4472HK160	1600	4472	59000	17.40 x 10^6	0.986	0.068	125	0.0090	0.0099	WP4	
N4472HK180	1800	4472	59000	17.40 x 10^6	0.986	0.068	125	0.0090	0.0099	WP4	
➢ **N4650EA400**	4000	4650	56000	15.7 x 10^6	0.977	0.177	125	0.005	0.00538	W107	
➢ **N4650EA450**	4500	4650	56000	15.7 x 10^6	0.977	0.177	125	0.005	0.00538	W107	
➢ **N4845EE320**	3200	4845	65000	21.1 x 10^6	0.913	0.125	125	0.006	0.00654	W108	
➢ **N4845EE360**	3600	4845	65000	21.1 x 10^6	0.913	0.125	125	0.006	0.00654	W108	
➢ **N5415EA320**	3200	5415	65000	21.1 x 10^6	0.913	0.125	125	0.005	0.00538	W107	
➢ **N5415EA360**	3600	5415	65000	21.1 x 10^6	0.913	0.125	125	0.005	0.00538	W107	
➢ **N5715EE240**	2400	5715	80000	32.0 x 10^6	0.840	0.085	125	0.006	0.00654	W108	
➢ **N5715EE280**	2800	5715	80000	32.0 x 10^6	0.840	0.085	125	0.006	0.00654	W108	
N6012ZD020	200	6012	65000	21.13 x 10^6	0.853	0.029	140	0.0110	0.0119	W46	
N6012ZD040	400	6012	65000	21.13 x 10^6	0.853	0.029	140	0.0110	0.0119	W46	
N6012ZD060	600	6012	65000	21.13 x 10^6	0.853	0.029	140	0.0110	0.0119	W46	
➢ **N6405EA240**	2400	6405	80000	32.0 x 10^6	0.840	0.085	125	0.005	0.00538	W107	
➢ **N6405EA280**	2800	6405	80000	32.0 x 10^6	0.840	0.085	125	0.005	0.00538	W107	
N6974HK020	200	6974	65000	21.13 x 10^6	0.853	0.029	140	0.0090	0.0099	WP4	
N6974HK040	400	6974	65000	21.13 x 10^6	0.853	0.029	140	0.0090	0.0099	WP4	
N6974HK060	600	6974	65000	21.13 x 10^6	0.853	0.029	140	0.0090	0.0099	WP4	

WP1 Weight 180 g

WP2 Weight 200 g

WP3 Weight 260 g

WP6 Weight 330 g

WP5 Weight 500 g

WP4 Weight 550 g

Medium Voltage Thyristors

Medium voltage applications place additional demands on phase controlled thyristors. To meet these demands we have developed a comprehensive range of thyristors optimised for medium voltage applications and series operation. As voltages increase, so do switching losses and turn-off time to a point where they become significant in line frequency applications. Our patented distributed gate architecture ensures excellent switching performance over a wide range of voltage, current and di/dt. Device lifetime is also engineered to achieve an optimum balance between conduction losses, commutation losses and turn-off time to give maximum power handling from line frequency to 400Hz. This also gives significant benefits when series or parallel connection of devices is required. Medium voltage thyristors are available from 3.2kV up to 6.5kV with silicon diameters from 38mm to 96mm making them particularly suitable for high power converters such as medium voltage DC drives, medium voltage soft starts and utility applications such as HVDC, static VAr compensators, excitation and transfer switches.

We recognise the importance of reliability in these large, capital intensive applications and as a result we subject these parts to extended levels of both routine and type testing to ensure that your investment gives years of trouble free service.

Capsule Types

Part No.	V_{DRM}	I_{TAV}	I_{TSM}	I^2t	t_q	Typ. Reverse Recovery Charge			V_{T0}	r_T	T_{JM}	R_{thJK}		Fig. No.
	V_{RRM}	T_K = 55°C	10 ms ½ sine		@	T_{JM}			@T_{JM}			180° Sine	120° Rect.	
			V_R - ≤ 60% V_{RRM}		200 V/µs	Q_{rr}	@I_{TM}	@ -di/dt						
➢ New	V	A	A	A^2s	µs	µC	A	A/µs	V	mΩ	°C	K/W	K/W	
➢ **K0445LG600**	6000	450	6400	200 x 10^3	700-1000	3100	500	10	1.560	2.270	125	0.0380	0.0400	W56
➢ **K0445LG650**	6500	450	6400	200 x 10^3	700-1000	3100	500	10	1.560	2.270	125	0.0380	0.0400	W56
➢ **K0500LC600**	6000	500	6400	200 x 10^3	700-1000	3100	500	10	1.560	2.270	125	0.0320	0.0347	W10
➢ **K0500LC650**	6500	500	6400	200 x 10^3	700-1000	3100	500	10	1.560	2.270	125	0.0320	0.0347	W10
➢ **K0560QE600**	6000	575	7700	296 x 10^3	1000-1100	4400	700	10	1.460	1.750	125	0.0310	0.0329	W76
➢ **K0560QE650**	6500	575	7700	296 x 10^3	1000-1100	4400	700	10	1.460	1.750	125	0.0310	0.0329	W76
➢ **K0620QA600**	6000	640	7700	296 x 10^3	1000-1100	3800	2000	10	1.460	1.750	125	0.0260	0.0281	W75
➢ **K0620QA650**	6500	640	7700	296 x 10^3	1000-1100	3800	2000	10	1.460	1.750	125	0.0260	0.0281	W75
K0890NC360	3600	890	10900	594 x 10^3	350-550	4000	1000	10	1.516	0.800	125	0.0240	0.0270	W11
K0890NC420	4200	890	10900	594 x 10^3	350-550	4000	1000	10	1.516	0.800	125	0.0240	0.0270	W11
➢ **K0900ME600**	6000	1010	12600	794 x 10^3	850-1150	6200	1000	10	1.610	0.900	125	0.0180	0.0204	W78
➢ **K0900ME650**	6500	1010	12600	794 x 10^3	850-1150	6200	1000	10	1.610	0.900	125	0.0180	0.0204	W78
➢ **K1010MA600**	6000	1130	12600	794 x 10^3	850-1150	6200	1000	10	1.610	0.900	125	0.0150	0.0174	W77
➢ **K1010MA650**	6500	1130	12600	794 x 10^3	850-1150	6200	1000	10	1.610	0.900	125	0.0150	0.0174	W77
K1121NC320	3200	1121	15000	1.13 x 10^6	200-300	2000	1000	10	1.098	0.542	125	0.0240	0.0270	W11
K1121NC360	3600	1121	15000	1.13 x 10^6	200-300	2000	1000	10	1.098	0.542	125	0.0240	0.0270	W11
K1197NC300	3000	1197	10650	567 x 10^3	200-300	2700	1000	10	1.335	0.372	125	0.0240	0.0270	W11
K1197NC320	3200	1197	10650	567 x 10^3	200-300	2700	1000	10	1.335	0.372	125	0.0240	0.0270	W11

Outlines on pages O-01...O-30

W10 Weight 340 g

W11 Weight 510 g

W56 Weight 271 g

W75 Weight 330 g

W76 Weight 420 g

W77 Weight 550 g

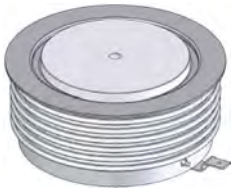
W78 Weight 730 g

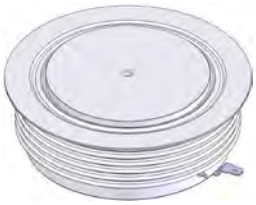
W80 Weight 1200 g

Medium Voltage Thyristors

Capsule Types

Part No.	V_{DRM} V_{RRM}	I_{TAV} T_K = 55°C	I_{TSM} 10 ms ½ sine V_R - ≤ 60% V_{RRM}	I^2t	t_q @ 200 V/µs	Typ. Reverse Recovery Charge T_{JM} Q_{rr}	@I_{TM}	@ -di/dt	V_{T0} @T_{JM}	r_T	T_{JM}	R_{thJK} 180° Sine	120° Rect.	Fig. No.
➢ New	V	A	A	A^2s	µs	µC	A	A/µs	V	mΩ	°C	K/W	K/W	
K1210MA480 *	4800	1210	15300	1.17×10^6	750-1050	3550	1000	10	1.477	0.797	125	0.0150	0.0174	W77
K1210MA520 *	5200	1210	15300	1.17×10^6	750-1050	3550	1000	10	1.477	0.797	125	0.0150	0.0174	W77
K1270MA420 *	4200	1270	16700	1.39×10^6	650-950	2150	1000	10	1.331	0.741	125	0.0150	0.0174	W77
K1270MA450 *	4500	1270	16700	1.39×10^6	650-950	2150	1000	10	1.331	0.741	125	0.0150	0.0174	W77
➢ K1495HE600	6000	1495	21800	2.38×10^6	1200-1500	9000	1500	10	1.496	0.606	125	0.0125	0.0132	W80
➢ K1495HE650	6500	1495	21800	2.38×10^6	1200-1500	9000	1500	10	1.496	0.606	125	0.0125	0.0132	W80
➢ K1670HA600	6000	1670	21800	2.38×10^6	1200-1500	9000	1500	10	1.496	0.606	125	0.0105	0.0113	W79
➢ K1670HA650	6500	1670	21800	2.38×10^6	1200-1500	9000	1500	10	1.496	0.606	125	0.0105	0.0113	W79
K1785HA420 *	4200	1785	26600	3.53×10^6	1050-1350	5150	1500	10	1.373	0.536	125	0.0105	0.0113	W79
K1785HA450 *	4500	1785	26600	3.53×10^6	1050-1350	5150	1500	10	1.373	0.536	125	0.0105	0.0113	W79
K1947ZC400	4000	1947	25000	3.13×10^6	600-700	8800	1000	10	1.221	0.425	125	0.0110	0.0119	W13
K1947ZC450	4500	1947	25000	3.13×10^6	600-700	8800	1000	10	1.221	0.425	125	0.0110	0.0119	W13
K1947ZD400	4000	1947	25000	3.13×10^6	600-700	8800	1000	10	1.221	0.425	125	0.0110	0.0119	W46
K1947ZD450	4500	1947	25000	3.13×10^6	600-700	8800	1000	10	1.221	0.425	125	0.0110	0.0119	W46
➢ K2085TE600	6000	2145	33000	5.45×10^6	1450-1800	11000	3000	10	1.260	0.410	125	0.0095	0.0101	W82
➢ K2085TE650	6500	2145	33000	5.45×10^6	1450-1800	11000	3000	10	1.260	0.410	125	0.0095	0.0101	W82
K2095ZC360	3600	2095	18200	1.66×10^6	400-500	4550	2000	10	1.502	0.296	125	0.0110	0.0119	W13
K2095ZC420	4200	2095	18200	1.66×10^6	400-500	4550	2000	10	1.502	0.296	125	0.0110	0.0119	W13
K2095ZD360	3600	2095	18200	1.66×10^6	400-500	4550	2000	10	1.502	0.296	125	0.0110	0.0119	W46
K2095ZD420	4200	2095	18200	1.66×10^6	400-500	4550	2000	10	1.502	0.296	125	0.0110	0.0119	W46
➢ K2325TJ600	6000	2380	33000	5.45×10^6	1450-1800	11000	3000	10	1.260	0.410	125	0.0080	0.0085	W81
➢ K2325TJ650	6500	2380	33000	5.45×10^6	1450-1800	11000	3000	10	1.260	0.410	125	0.0080	0.0085	W81
K3745EA600 *	6000	3745	35400	6.26×10^6	1500-1800	14000	4000	10	1.481	0.244	125	0.005	0.00538	W107
K3745EA650 *	6500	3745	35400	6.26×10^6	1500-1800	14000	4000	10	1.481	0.244	125	0.005	0.00538	W107
K4005EA480 *	4800	4005	43200	9.33×10^6	1300-1600	8000	4000	10	1.359	0.216	125	0.005	0.00538	W107
K4005EA520 *	5200	4005	43200	9.33×10^6	1300-1600	8000	4000	10	1.359	0.216	125	0.005	0.00538	W107
K4215EA420 *	4200	4215	47000	11.0×10^6	1200-1500	4800	4000	10	1.224	0.201	125	0.005	0.00538	W107
K4215EA450 *	4500	4215	47000	11.0×10^6	1200-1500	4800	4000	10	1.224	0.201	125	0.005	0.00538	W107

* New parts in development, please consult factory for more details

Outlines on pages O-01...O-30

W13 Weight 1700 g

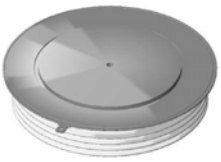

W46 Weight 1200 g

W77 Weight 550 g

W79 Weight xxx g

W82 Weight 1650 g

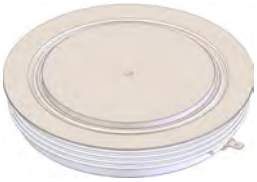

W107 Weight 1600 g

Fast Turn Off Thyristors

IXYS UK Westcode Ltd's „P" series of fast switching thyristors have regenerative gate structure to ensure low switching losses and high di/dt performance. „P" Series devices are suitable for existing inverter, DC chopper drives, UPS and Pulse Power applications. In addition to pressure contact technology these devices offer lower reverse recovery charge values, low forward switching losses and high reliability. These devices are not recommended for new designs.

A new addition for 2017 is an M24 stud based assembly, with a current rating of 431A, voltage ratings up to 1600V and tq starting at 25ms

Stud Types

Part No.	V_{DRM} / V_{RRM}	I_{TAV}	I_{TSM}	I^2t	t_q	Typ. Reverse Recovery Charge			V_{T0}	r_T	R_{thJC}	Fig. No.	Package style
		T_C = 55°C	10 ms ½ sine V_R - ≤ 60% V_{RRM}		@ 200 V/µs	T_{JM} Q_{rr}	@I_{TM}	@ -di/dt	@T_{JM}		180° sine		Outlines on pages O-01...O-30
	V	A	A	A^2s	µs	µC	A	A/µs	V	mΩ	K/W		
P0128SH10C	1000	128	1700	19 x 10³	15	50	100	10	1.600	2.490	0.2300	W17	
P0128SH10D	1000	128	1700	19 x 10³	20	50	100	10	1.600	2.490	0.2300	W17	
P0128SH10E	1000	128	1700	19 x 10³	25	50	100	10	1.600	2.490	0.2300	W17	
P0128SH12C	1200	128	1700	19 x 10³	15	50	100	10	1.600	2.490	0.2300	W17	
P0128SH12D	1200	128	1700	19 x 10³	20	50	100	10	1.600	2.490	0.2300	W17	
P0128SH12E	1200	128	1700	19 x 10³	25	50	100	10	1.600	2.490	0.2300	W17	W16 Weight 100 g
P0128SJ10C	1000	128	1700	19 x 10³	15	50	100	10	1.600	2.490	0.2300	W16	
P0128SJ10D	1000	128	1700	19 x 10³	20	50	100	10	1.600	2.490	0.2300	W16	
P0128SJ10E	1000	128	1700	19 x 10³	25	50	100	10	1.600	2.490	0.2300	W16	
P0128SJ12C	1200	128	1700	19 x 10³	15	50	100	10	1.600	2.490	0.2300	W16	
P0128SJ12D	1200	128	1700	19 x 10³	20	50	100	10	1.600	2.490	0.2300	W16	
P0128SJ12E	1200	128	1700	19 x 10³	25	50	100	10	1.600	2.490	0.2300	W16	
R0472YC12EKER	1200	240	4000	80 x 10³	25	155	550	40	1.648	1.125	0.1249	W115	
R0472YC12FKER	1600	240	4000	80 x 10³	30	155	550	40	1.648	1.125	0.1249	W115	
R0472YC16EKER	1200	240	4000	80 x 10³	25	155	550	40	1.648	1.125	0.1249	W115	
R0472YC16FKER	1600	240	4000	80 x 10³	30	155	550	40	1.648	1.125	0.1249	W115	
P0248SC12D	1200	248	2700	36.5 x 10³	20	45	300	20	1.600	1.230	0.1200	W18	
P0248SC12E	1200	248	2700	36.5 x 10³	25	45	300	20	1.600	1.230	0.1200	W18	
P0273SC12D	1200	273	3250	52.8 x 10³	20	80	300	20	1.550	0.870	0.1200	W18	
P0273SC12E	1200	273	3250	52.8 x 10³	25	80	300	20	1.550	0.870	0.1200	W18	W17 Weight 130 g
P0273SC12F	1200	273	3250	52.8 x 10³	30	80	300	20	1.550	0.870	0.1200	W18	
P0306SC08A	800	306	4700	110 x 10³	10	50	300	20	1.400	0.670	0.1200	W18	
P0306SC08B	800	306	4700	110 x 10³	12	50	300	20	1.400	0.670	0.1200	W18	
P0306SC08C	800	306	4700	110 x 10³	15	50	300	20	1.400	0.670	0.1200	W18	
P0311SC12E	1200	311	3600	64.8 x 10³	25	55	300	20	1.170	0.920	0.1200	W18	
P0311SC12F	1200	311	3600	64.8 x 10³	30	55	300	20	1.170	0.920	0.1200	W18	
P0330SC04A	400	330	5000	125 x 10³	10	55	300	20	1.050	0.880	0.1200	W18	
P0330SC04C	400	330	5000	125 x 10³	15	55	300	20	1.050	0.880	0.1200	W18	
P0330SC06A	600	330	5000	125 x 10³	10	55	300	20	1.050	0.880	0.1200	W18	
P0330SC06C	600	330	5000	125 x 10³	15	55	300	20	1.050	0.880	0.1200	W18	
P0330SC08A	800	330	5000	125 x 10³	10	55	300	20	1.050	0.880	0.1200	W18	
P0330SC08C	800	330	5000	125 x 10³	15	55	300	20	1.050	0.880	0.1200	W18	
P0431SC04B	400	431	6500	211 x 10³	12	190	300	20	0.950	0.377	0.1200	W18	
P0431SC04C	400	431	6500	211 x 10³	15	190	300	20	0.950	0.377	0.1200	W18	W18 Weight 280 g
P0431SC06B	600	431	6500	211 x 10³	12	190	300	20	0.950	0.377	0.1200	W18	
P0431SC06C	600	431	6500	211 x 10³	15	190	300	20	0.950	0.377	0.1200	W18	

T_{JM} = 125°C

W115 Weight 650 g

Fast Turn Off Thyristors

Capsule Types

Part No.	V_{DRM} / V_{RRM}	I_{TAV}	I_{TSM}	I^2t	t_q	Typ. Reverse Recovery Charge			V_{T0}	r_T	R_{thJC}	Fig. No.	Package style
		T_K = 55°C	10 ms ½ sine V_R - ≤ 60% V_{RRM}		@ 200 V/µs	T_{JM} Q_{rr}	@I_{TM}	@-di/dt	@ T_{JM}		d.c. 180° sine		Outlines on pages O-01...O-30
	V	A	A	A^2s	µs	µC	A	A/µs	V	mΩ	K/W		
P0295WC12D	1200	295	2700	36.5 x 10^3	20	50	300	20	1.600	1.230	0.0950	W8	
P0295WC12E	1200	295	2700	36.5 x 10^3	25	50	300	20	1.600	1.230	0.0950	W8	
P0327WC08C	800	327	3250	63.9 x 10^3	15	45	300	20	1.550	0.870	0.0950	W8	
P0327WC08D	800	327	3250	63.9 x 10^3	20	45	300	20	1.550	0.870	0.0950	W8	
P0327WC08E	800	327	3250	63.9 x 10^3	25	45	300	20	1.550	0.870	0.0950	W8	
P0327WC08F	800	327	3250	63.9 x 10^3	30	45	300	20	1.550	0.870	0.0950	W8	
P0327WC12C	1200	327	3250	63.9 x 10^3	15	45	300	20	1.550	0.870	0.0950	W8	
P0327WC12D	1200	327	3250	63.9x 10^3	20	45	300	20	1.550	0.870	0.0950	W8	
P0327WC12E	1200	327	3250	63.9 x 10^3	25	45	300	20	1.550	0.870	0.0950	W8	W8 Weight 70 g
P0327WC12F	1200	327	3250	63.9 x 10^3	30	45	300	20	1.550	0.870	0.0950	W8	
P0366WC04A	400	366	4700	110 x 10^3	10	25	300	20	1.400	0.670	0.0950	W8	
P0366WC04B	400	366	4700	110 x 10^3	12	25	300	20	1.400	0.670	0.0950	W8	
P0366WC04C	400	366	4700	110 x 10^3	15	25	300	20	1.400	0.670	0.0950	W8	
P0366WC06A	600	366	4700	110 x 10^3	10	25	300	20	1.400	0.670	0.0950	W8	
P0366WC06B	600	366	4700	110 x 10^3	12	25	300	20	1.400	0.670	0.0950	W8	
P0366WC06C	600	366	4700	110 x 10^3	15	25	300	20	1.400	0.670	0.0950	W8	
P0366WC08A	800	366	4700	110 x 10^3	10	25	300	20	1.400	0.670	0.0950	W8	
P0366WC08B	800	366	4700	110 x 10^3	12	25	300	20	1.400	0.670	0.0950	W8	
P0366WC08C	800	366	4700	110 x 10^3	15	25	300	20	1.400	0.670	0.0950	W8	
P0367WC12E	1200	367	3600	64.8 x 10^3	25	50	300	20	1.170	0.920	0.0950	W8	
P0367WC12F	1200	367	3600	64.8 x 10^3	30	50	300	20	1.170	0.920	0.0950	W8	
P0389WC04B	400	389	5000	125 x 10^3	12	30	300	20	1.050	0.880	0.0950	W8	
P0389WC04C	400	389	5000	125 x 10^3	15	30	300	20	1.050	0.880	0.0950	W8	
P0389WC08B	800	389	5000	125 x 10^3	12	30	300	20	1.050	0.880	0.0950	W8	W10 Weight 340 g
P0389WC08C	800	389	5000	125 x 10^3	15	30	300	20	1.050	0.880	0.0950	W8	
P0515WC04B	400	515	6500	211 x 10^3	12	180	300	20	0.950	0.377	0.0950	W8	
P0515WC04C	400	515	6500	211 x 10^3	15	180	300	20	0.950	0.377	0.0950	W8	
P0515WC04D	400	515	6500	211 x 10^3	20	180	300	20	0.950	0.377	0.0950	W8	
P0515WC06B	600	515	6500	211 x 10^3	12	180	300	20	0.950	0.377	0.0950	W8	
P0515WC06C	600	515	6500	211 x 10^3	15	180	300	20	0.950	0.377	0.0950	W8	
P0515WC06D	600	515	6500	211 x 10^3	20	180	300	20	0.950	0.377	0.0950	W8	
P0838LC06B	600	1110	12300	750 x 10^3	12	160	800	50	1.200	0.280	0.0320	W10	
P0838LC06C	600	1110	12300	750 x 10^3	15	160	800	50	1.200	0.280	0.0320	W10	
P0848YC04B	400	848	8750	383 x 10^3	12	200	550	40	1.010	0.305	0.0500	W58	
P0848YC04C	400	848	8750	383 x 10^3	15	200	550	40	1.010	0.305	0.0500	W58	
P0848YC06B	600	848	8750	383 x 10^3	12	200	550	40	1.010	0.305	0.0500	W58	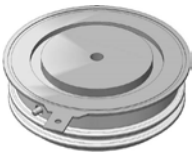
P0848YC06C	600	848	8750	383 x 10^3	15	200	550	40	1.010	0.305	0.0500	W58	
P1007LC08D	800	1007	9500	451 x 10^3	20	400	800	50	1.509	0.265	0.0320	W10	
P1007LC08E	800	1007	9500	451 x 10^3	25	400	800	50	1.509	0.265	0.0320	W10	W58 Weight 90 g
P1007LC08F	800	1007	9500	451 x 10^3	30	400	800	50	1.509	0.265	0.0320	W10	
P1007LC12D	1200	1007	9500	451 x 10^3	20	400	800	50	1.509	0.265	0.0320	W10	
P1007LC12E	1200	1007	9500	451 x 10^3	25	400	800	50	1.509	0.265	0.0320	W10	
P1007LC12F	1200	1007	9500	451 x 10^3	30	400	800	50	1.509	0.265	0.0320	W10	

T_{JM} = 125°C

Distributed Gate Thyristors

IXYS UK Westcode Ltd is recognised as the Worldwide leader in distributed gate technology. These devices are available with blocking voltages to 4.5kV and average currents in excess of 5kA, with tq from 10 to 300µs. The unique distributed gate design and lifetime control features give these devices both high di/dt capability and fast, low recovery turn-off. while maintaining a low on-state voltage drop. Ideally suited to applications including: induction power supplies, high frequency inverters/converters, UPS and pulse power.

Capsule Types

Part No.	V_{DRM}	V_{RRM}	I_{TAV}	I_{TSM}	I^2t	t_q	Typ. Reverse Recovery Charge			V_{T0}	r_T	R_{thJK}	Fig. No.	Package style
			T_K = 55°C	10 ms ½ sine V_R - ≤ 60% V_{RRM}		@ 200 V/µs	Q_{rr} @T_{JM}	@I_{TM} @T_{JM}	@-di/dt @T_{JM}	@T_{JM}	@T_{JM}	180° Sine		Outlines on pages O-01...O-30
➢ New	V	V	A	A	A^2s	µs	µC	A	A/µs	V	mΩ	K/W		
R0472YC12E	1200	1200	472	4300	92.5 x 10³	25	155	550	40	1.648	1.125	0.050	W58	
R0472YC12F	1200	1200	472	4300	92.5 x 10³	30	155	550	40	1.648	1.125	0.050	W58	
R0472YC16E	1600	1600	472	4300	92.5 x 10³	25	155	550	40	1.648	1.125	0.050	W58	
R0472YC16F	1600	1600	472	4300	92.5 x 10³	30	155	550	40	1.648	1.125	0.050	W58	
R0487YC12D	1200	1200	487	4300	92.5 x 10³	20	90	550	40	1.738	0.943	0.0500	W58	
R0487YC12E	1200	1200	487	4300	92.5 x 10³	25	90	550	40	1.738	0.943	0.0500	W58	
R0487YC14D	1400	1400	487	4300	92.5 x 10³	20	90	550	40	1.738	0.943	0.0500	W58	
R0487YC14E	1400	1400	487	4300	92.5 x 10³	25	90	550	40	1.738	0.943	0.0500	W58	
R0577YC12C	1200	1200	577	6000	180 x 10³	15	150	550	40	1.510	0.640	0.0500	W58	
R0577YC12D	1200	1200	577	6000	180 x 10³	20	150	550	40	1.510	0.640	0.0500	W58	
R0577YC12E	1200	1200	577	6000	180 x 10³	25	150	550	40	1.510	0.640	0.0500	W58	
R0633YC12D	1200	1200	633	6300	200 x 10³	20	125	550	40	1.250	0.614	0.0500	W58	
R0633YC12E	1200	1200	633	6300	200 x 10³	25	125	550	40	1.250	0.614	0.0500	W58	
R0633YC12F	1200	1200	633	6300	200 x 10³	30	125	550	40	1.250	0.614	0.0500	W58	W10 Weight 340 g
R0717LC14G	1400	1400	717	7050	248.5 x 10³	35	425	1000	60	1.752	0.732	0.0320	W10	
R0717LC18G	1800	1800	717	7050	248.5 x 10³	35	425	1000	60	1.752	0.732	0.0320	W10	
R0736LC20J	2000	2000	736	6800	231 x 10³	50	640	1000	60	1.842	0.619	0.0320	W10	
R0736LC20K	2000	2000	736	6800	231 x 10³	60	640	1000	60	1.842	0.619	0.0320	W10	
R0736LC22J	2200	2200	736	6800	231 x 10³	50	640	1000	60	1.842	0.619	0.0320	W10	
R0736LC22K	2200	2200	736	6800	231 x 10³	60	640	1000	60	1.842	0.619	0.0320	W10	
R0736LC25J	2500	2500	736	6800	231 x 10³	50	640	1000	60	1.842	0.619	0.0320	W10	
R0736LC25K	2500	2500	736	6800	231 x 10³	60	640	1000	60	1.842	0.619	0.0320	W10	
R0736LC25L	2500	2500	736	6800	231 x 10³	65	640	1000	60	1.842	0.619	0.0320	W10	
R0736LC25M	2500	2500	736	6800	231 x 10³	70	640	1000	60	1.842	0.619	0.0320	W10	
R0809LC10A	1000	1000	809	8000	320 x 10³	10	120	1000	60	2.100	0.300	0.0320	W10	
R0809LC10B	1000	1000	809	8000	320 x 10³	12	120	1000	60	2.100	0.300	0.0320	W10	
R0830LC12C	1200	1200	830	8500	361 x 10³	15	285	1000	60	1.900	0.357	0.0320	W10	
R0830LC12D	1200	1200	830	8500	361 x 10³	20	285	1000	60	1.900	0.357	0.0320	W10	W11 Weight 510 g
R0830LC12E	1200	1200	830	8500	361 x 10³	25	285	1000	60	1.900	0.357	0.0320	W10	
R0830LC12F	1200	1200	830	8500	361 x 10³	30	285	1000	60	1.900	0.357	0.0320	W10	
R0830LC14C	1400	1400	830	8500	361 x 10³	15	285	1000	60	1.900	0.357	0.0320	W10	
R0830LC14D	1400	1400	830	8500	361 x 10³	20	285	1000	60	1.900	0.357	0.0320	W10	
R0830LC14E	1400	1400	830	8500	361 x 10³	25	285	1000	60	1.900	0.357	0.0320	W10	
R0830LC14F	1400	1400	830	8500	361 x 10³	30	285	1000	60	1.900	0.357	0.0320	W10	
R0878LC18K	1800	1800	878	7500	281 x 10³	60	720	1000	60	1.447	0.480	0.0320	W10	
R0878LC18L	1800	1800	878	7500	281 x 10³	65	720	1000	60	1.447	0.480	0.0320	W10	
R0878LC18M	1800	1800	878	7500	281 x 10³	70	720	1000	60	1.447	0.480	0.0320	W10	
R0878LC20K	2000	1800	878	7500	281 x 10³	60	720	1000	60	1.447	0.480	0.0320	W10	
R0878LC20L	2000	1800	878	7500	281 x 10³	65	720	1000	60	1.447	0.480	0.0320	W10	
R0878LC20M	2000	1800	878	7500	281 x 10³	70	720	1000	60	1.447	0.480	0.0320	W10	
R0878LC21K	2100	1800	878	7500	281 x 10³	60	720	1000	60	1.447	0.480	0.0320	W10	
R0878LC21L	2100	1800	878	7500	281 x 10³	65	720	1000	60	1.447	0.480	0.0320	W10	
R0878LC21M	2100	1800	878	7500	281 x 10³	70	720	1000	60	1.447	0.480	0.0320	W10	
R0929LC10A	1000	1000	929	9000	405 x 10³	10	150	1000	60	1.549	0.350	0.0320	W10	
R0929LC10B	1000	1000	929	9000	405 x 10³	12	150	1000	60	1.549	0.350	0.0320	W10	
R0929LC10C	1000	1000	929	9000	405 x 10³	15	150	1000	60	1.549	0.350	0.0320	W10	W13 Weight 1700 g
R0929LC12A	1200	1200	929	9000	405 x 10³	10	150	1000	60	1.549	0.350	0.0320	W10	
R0929LC12B	1200	1200	929	9000	405 x 10³	12	150	1000	60	1.549	0.350	0.0320	W10	
R0929LC12C	1200	1200	929	9000	405 x 10³	15	150	1000	60	1.549	0.350	0.0320	W10	
R0929LC12D	1200	1200	929	9000	405 x 10³	20	150	1000	60	1.549	0.350	0.0320	W10	
R0929LC12E	1200	1200	929	9000	405 x 10³	25	150	1000	60	1.549	0.350	0.0320	W10	
R0964LC10C	1000	1000	964	9400	442 x 10³	15	170	1000	60	1.530	0.309	0.0320	W10	
R0964LC10D	1000	1000	964	9400	442 x 10³	20	170	1000	60	1.530	0.309	0.0320	W10	
R0964LC10E	1000	1000	964	9400	442 x 10³	25	170	1000	60	1.530	0.309	0.0320	W10	

Distributed Gate Thyristors

Capsule Types

Part No.	V_{DRM}	V_{RRM}	I_{TAV}	I_{TSM}	I^2t	t_q	Typ. Reverse Recovery Charge			V_{T0}	r_T	R_{thJK}	Fig. No.	Package style
			T_K = 55°C	10 ms ½ sine V_R - ≤ 60% V_{RRM}		@ 200 V/µs	Q_{rr} @T_{JM}	@I_{TM} @T_{JM}	@-di/dt @T_{JM}	@T_{JM}	@T_{JM}	180° Sine		Outlines on pages O-01...O-30
➢ New	V	V	A	A	A^2s	µs	µC	A	A/µs	V	mΩ	K/W		
R0964LC12C	1200	1200	964	9400	442 x 10^3	15	170	1000	60	1.530	0.309	0.0320	W10	
R0964LC12D	1200	1200	964	9400	442 x 10^3	20	170	1000	60	1.530	0.309	0.0320	W10	
R0964LC12E	1200	1200	964	9400	442 x 10^3	25	170	1000	60	1.530	0.309	0.0320	W10	
R0990LC08A	800	800	990	11000	605 x 10^3	10	90	1000	60	1.350	0.350	0.0320	W10	
R0990LC08B	800	800	990	11000	605 x 10^3	12	90	1000	60	1.350	0.350	0.0320	W10	
R0990LC08C	800	800	990	11000	605 x 10^3	15	90	1000	60	1.350	0.350	0.0320	W10	
➢ R1045NC28L	2800	2800	1055	12500	781 x 10^3	60	950	1000	60	1.640	0.430	0.0240	W11	
➢ R1045NC28M	2800	2800	1055	12500	781 x 10^3	70	950	1000	60	1.640	0.430	0.0240	W11	
➢ R1045NC32L	3200	3200	1055	12500	781 x 10^3	60	950	1000	60	1.640	0.430	0.0240	W11	
➢ R1045NC32M	3200	3200	1055	12500	781 x 10^3	70	950	1000	60	1.640	0.430	0.0240	W11	
R1124NC18J	1800	1800	1124	13500	0.91 x 10^6	50	640	1000	60	1.540	0.379	0.0240	W11	
R1124NC18K	1800	1800	1124	13500	0.91 x 10^6	60	640	1000	60	1.540	0.379	0.0240	W11	
R1124NC18L	1800	1800	1124	13500	0.91 x 10^6	65	640	1000	60	1.540	0.379	0.0240	W11	
R1124NC18M	1800	1800	1124	13500	0.91 x 10^6	70	640	1000	60	1.540	0.379	0.0240	W11	
R1124NC20J	2000	1800	1124	13500	0.91 x 10^6	50	640	1000	60	1.540	0.379	0.0240	W11	
R1124NC20K	2000	1800	1124	13500	0.91 x 10^6	60	640	1000	60	1.540	0.379	0.0240	W11	
R1124NC20L	2000	1800	1124	13500	0.91 x 10^6	65	640	1000	60	1.540	0.379	0.0240	W11	W14 Weight 1300 g
R1124NC20M	2000	1800	1124	13500	0.91 x 10^6	70	640	1000	60	1.540	0.379	0.0240	W11	
R1124NC21J	2100	1800	1124	13500	0.91 x 10^6	50	640	1000	60	1.540	0.379	0.0240	W11	
R1124NC21K	2100	1800	1124	13500	0.91 x 10^6	60	640	1000	60	1.540	0.379	0.0240	W11	
R1124NC21L	2100	1800	1124	13500	0.91 x 10^6	65	640	1000	60	1.540	0.379	0.0240	W11	
R1124NC21M	2100	1800	1124	13500	0.91 x 10^6	70	640	1000	60	1.540	0.379	0.0240	W11	
R1127NC32P	3200	3200	1127	12800	819 x 10^3	120	3500	1000	60	1.500	0.474	0.0220	W11	
R1127NC32R	3200	3200	1127	12800	819 x 10^3	140	3500	1000	60	1.500	0.474	0.0220	W11	
R1127NC32S	3200	3200	1127	12800	819 x 10^3	160	3500	1000	60	1.500	0.474	0.0220	W11	
R1127NC32T	3200	3200	1127	12800	819 x 10^3	200	3500	1000	60	1.500	0.474	0.0220	W11	
R1127NC34R	3400	3400	1127	12800	819 x 10^3	140	3500	1000	60	1.500	0.474	0.0220	W11	
R1127NC34S	3400	3400	1127	12800	819 x 10^3	160	3500	1000	60	1.500	0.474	0.0220	W11	
R1127NC34T	3400	3400	1127	12800	819 x 10^3	200	3500	1000	60	1.500	0.474	0.0220	W11	
R1127NC36R	3600	3600	1127	12800	819 x 10^3	140	3500	1000	60	1.500	0.474	0.0220	W11	
R1127NC36S	3600	3600	1127	12800	819 x 10^3	160	3500	1000	60	1.500	0.474	0.0220	W11	
R1127NC36T	3600	3600	1127	12800	819 x 10^3	200	3500	1000	60	1.500	0.474	0.0220	W11	
R1158NC26N	2600	2600	1158	14500	1.05 x 10^6	100	1600	1000	60	1.600	0.400	0.0220	W11	
R1158NC26P	2600	2600	1158	14500	1.05 x 10^6	120	1600	1000	60	1.600	0.400	0.0220	W11	
R1158NC26T	2600	2600	1158	14500	1.05 x 10^6	200	1600	1000	60	1.600	0.400	0.0220	W11	
R1178NC14E	1400	1400	1178	17000	1.45 x 10^6	25	320	1000	60	1.600	0.300	0.0240	W11	
R1178NC14F	1400	1400	1178	17000	1.45 x 10^6	30	320	1000	60	1.600	0.300	0.0240	W11	
R1178NC14G	1400	1400	1178	17000	1.45 x 10^6	35	320	1000	60	1.600	0.300	0.0240	W11	
R1211NC12C	1200	1200	1211	17600	1.548 x 10^6	15	230	1000	60	1.720	0.230	0.0240	W11	
R1211NC12D	1200	1200	1211	17600	1.548 x 10^6	20	230	1000	60	1.720	0.230	0.0240	W11	
R1211NC12E	1200	1200	1211	17600	1.548 x 10^6	25	230	1000	60	1.720	0.230	0.0240	W11	
R1271NC12B	1200	1200	1271	18000	1.62 x 10^6	12	200	1000	60	1.547	0.237	0.0240	W11	
R1271NC12C	1200	1200	1271	18000	1.62 x 10^6	15	200	1000	60	1.547	0.237	0.0240	W11	W15 Weight 2800 g
R1271NC12D	1200	1200	1271	18000	1.62 x 10^6	20	200	1000	60	1.547	0.237	0.0240	W11	
R1271NC12E	1200	1200	1271	18000	1.62 x 10^6	25	200	1000	60	1.547	0.237	0.0240	W11	
R1275NC18J	1800	1800	1275	15500	1.20 x 10^6	50	940	1000	60	1.207	0.342	0.0240	W11	
R1275NC18K	1800	1800	1275	15500	1.20 x 10^6	60	940	1000	60	1.207	0.342	0.0240	W11	
R1275NC18L	1800	1800	1275	15500	1.20 x 10^6	65	940	1000	60	1.207	0.342	0.0240	W11	
R1275NC18M	1800	1800	1275	15500	1.20 x 10^6	70	940	1000	60	1.207	0.342	0.0240	W11	
R1275NC20J	2000	1800	1275	15500	1.20 x 10^6	50	940	1000	60	1.207	0.342	0.0240	W11	
R1275NC20K	2000	1800	1275	15500	1.20 x 10^6	60	940	1000	60	1.207	0.342	0.0240	W11	
R1275NC20L	2000	1800	1275	15500	1.20 x 10^6	65	940	1000	60	1.207	0.342	0.0240	W11	
R1275NC20M	2000	1800	1275	15500	1.20 x 10^6	70	940	1000	60	1.207	0.342	0.0240	W11	
R1275NC21J	2100	1800	1275	15500	1.20 x 10^6	50	940	1000	60	1.207	0.342	0.0240	W11	
R1275NC21K	2100	1800	1275	15500	1.20 x 10^6	60	940	1000	60	1.207	0.342	0.0240	W11	
R1275NC21L	2100	1800	1275	15500	1.20 x 10^6	65	940	1000	60	1.207	0.342	0.0240	W11	
R1275NC21M	2100	1800	1275	15500	1.20 x 10^6	70	940	1000	60	1.207	0.342	0.0240	W11	
R1279NC22J	2200	2200	1279	14800	1.10 x 10^6	50	1250	1000	60	1.440	0.330	0.0220	W11	
R1279NC22K	2200	2200	1279	14800	1.10 x 10^6	60	1250	1000	60	1.440	0.330	0.0220	W11	
R1279NC22L	2200	2200	1279	14800	1.10 x 10^6	65	1250	1000	60	1.440	0.330	0.0220	W11	
R1279NC22M	2200	2200	1279	14800	1.10 x 10^6	70	1250	1000	60	1.440	0.330	0.0220	W11	

Distributed Gate Thyristors

Capsule Types

Part No.	V_{DRM}	V_{RRM}	I_{TAV}	I_{TSM}	I^2t	t_q	Typ. Reverse Recovery Charge			V_{T0}	r_T	R_{thJK}	Fig. No.	Package style
			T_K = 55°C	10 ms ½ sine V_R - ≤ 60% V_{RRM}		@ 200 V/µs	Q_{rr} @T_{JM}	@I_{TM} @T_{JM}	@-di/dt @T_{JM}	@T_{JM}	@T_{JM}	180° Sine		Outlines on pages O-01...O-30
➢ New	V	V	A	A	A^2s	µs	µC	A	A/µs	V	mΩ	K/W		
R1279NC25J	2500	2500	1279	14800	1.10×10^6	50	1250	1000	60	1.440	0.330	0.0220	W11	
R1279NC25K	2500	2500	1279	14800	1.10×10^6	60	1250	1000	60	1.440	0.330	0.0220	W11	
R1279NC25L	2500	2500	1279	14800	1.10×10^6	65	1250	1000	60	1.440	0.330	0.0220	W11	
R1279NC25M	2500	2500	1279	14800	1.10×10^6	70	1250	1000	60	1.440	0.330	0.0220	W11	
R1280NC21J	2100	2100	1280	14800	1.10×10^6	50	1200	1000	60	1.440	0.330	0.0220	W11	
R1280NC21K	2100	2100	1280	14800	1.10×10^6	60	1200	1000	60	1.440	0.330	0.0220	W11	
R1280NC21L	2100	2100	1280	14800	1.10×10^6	65	1200	1000	60	1.440	0.330	0.0220	W11	
R1280NC21M	2100	2100	1280	14800	1.10×10^6	70	1200	1000	60	1.440	0.330	0.0220	W11	
R1280NC22J	2200	2100	1280	14800	1.10×10^6	50	1200	1000	60	1.440	0.330	0.0220	W11	
R1280NC22K	2200	2100	1280	14800	1.10×10^6	60	1200	1000	60	1.440	0.330	0.0220	W11	
R1280NC22L	2200	2100	1280	14800	1.10×10^6	65	1200	1000	60	1.440	0.330	0.0220	W11	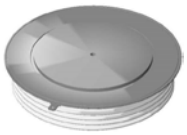
R1280NC22M	2200	2100	1280	14800	1.10×10^6	70	1200	1000	60	1.440	0.330	0.0220	W11	
R1280NC25J	2500	2100	1280	14800	1.10×10^6	50	1200	1000	60	1.440	0.330	0.0220	W11	
R1280NC25K	2500	2100	1280	14800	1.10×10^6	60	1200	1000	60	1.440	0.330	0.0220	W11	
R1280NC25L	2500	2100	1280	14800	1.10×10^6	65	1200	1000	60	1.440	0.330	0.0220	W11	W46 Weight 1200 g
R1280NC25M	2500	2100	1280	14800	1.10×10^6	70	1200	1000	60	1.440	0.330	0.0220	W11	
R1331NC10B	1000	1000	1331	18200	1.66×10^6	12	200	1000	60	1.450	0.285	0.0220	W11	
R1331NC10C	1000	1000	1331	18200	1.66×10^6	15	200	1000	60	1.450	0.285	0.0220	W11	
R1331NC10D	1000	1000	1331	18200	1.66×10^6	20	200	1000	60	1.450	0.285	0.0220	W11	
R1331NC12B	1200	1200	1331	18200	1.66×10^6	12	200	1000	60	1.450	0.285	0.0220	W11	
R1331NC12C	1200	1200	1331	18200	1.66×10^6	15	200	1000	60	1.450	0.285	0.0220	W11	
R1331NC12D	1200	1200	1331	18200	1.66×10^6	20	200	1000	60	1.450	0.285	0.0220	W11	
R1446NC12C	1200	1200	1446	19500	1.90×10^6	15	300	1000	60	1.304	0.199	0.0240	W11	
R1446NC12D	1200	1200	1446	19500	1.90×10^6	20	300	1000	60	1.304	0.199	0.0240	W11	
R1446NC12E	1200	1200	1446	19500	1.90×10^6	25	300	1000	60	1.304	0.199	0.0240	W11	
R1446NC12F	1200	1200	1446	19500	1.90×10^6	30	300	1000	60	1.304	0.199	0.0240	W11	
R1448NC14H	1400	1400	1448	15500	1.20×10^6	40	950	1000	60	1.300	0.250	0.0220	W11	
R1448NC14J	1400	1400	1448	15500	1.20×10^6	50	950	1000	60	1.300	0.250	0.0220	W11	
R1448NC18H	1800	1800	1448	15500	1.20×10^6	40	950	1000	60	1.300	0.250	0.0220	W11	
R1448NC18J	1800	1800	1448	15500	1.20×10^6	50	950	1000	60	1.300	0.250	0.0220	W11	
R1448NC20H	2000	2000	1448	15500	1.20×10^6	40	950	1000	60	1.300	0.250	0.0220	W11	
R1448NC20J	2000	2000	1448	15500	1.20×10^6	50	950	1000	60	1.300	0.250	0.0220	W11	
R1448NC20K	2000	2000	1448	15500	1.20×10^6	60	950	1000	60	1.300	0.250	0.0220	W11	
R1448NC20L	2000	2000	1448	15500	1.20×10^6	65	950	1000	60	1.300	0.250	0.0220	W11	
R1448NC20M	2000	2000	1448	15500	1.20×10^6	70	950	1000	60	1.300	0.250	0.0220	W11	
R1700MC18E	1800	1800	1700	20000	2.0×10^6	25	1400	1000	60	1.600	0.250	0.0150	W70	
R1700MC18F	1800	1800	1700	20000	2.0×10^6	30	1400	1000	60	1.600	0.250	0.0150	W70	W55 Weight 1800 g
R1700MC18G	1800	1800	1700	20000	2.0×10^6	35	1400	1000	60	1.600	0.250	0.0150	W70	
R1700MC18H	1800	1800	1700	20000	2.0×10^6	40	1400	1000	60	1.600	0.250	0.0150	W70	
R1700MC18J	1800	1800	1700	20000	2.0×10^6	50	1400	1000	60	1.600	0.250	0.0150	W70	
R1700MC21E	2100	1800	1700	20000	2.0×10^6	25	1400	1000	60	1.600	0.250	0.0150	W70	
R1700MC21F	2100	1800	1700	20000	2.0×10^6	30	1400	1000	60	1.600	0.250	0.0150	W70	
R1700MC21G	2100	1800	1700	20000	2.0×10^6	35	1400	1000	60	1.600	0.250	0.0150	W70	
R1700MC21H	2100	1800	1700	20000	2.0×10^6	40	1400	1000	60	1.600	0.250	0.0150	W70	
R1700MC21J	2100	1800	1700	20000	2.0×10^6	50	1400	1000	60	1.600	0.250	0.0150	W70	
R1955MC14D	1400	1400	1955	26500	3.51×10^6	20	1000	1000	60	1.460	0.910	0.0150	W70	
R1955MC14E	1400	1400	1955	26500	3.51×10^6	25	1000	1000	60	1.460	0.910	0.0150	W70	
R1955MC14F	1400	1400	1955	26500	3.51×10^6	30	1000	1000	60	1.460	0.910	0.0150	W70	
R1955MC16D	1600	1600	1955	26500	3.51×10^6	20	1000	1000	60	1.460	0.910	0.0150	W70	
R1955MC16E	1600	1600	1955	26500	3.51×10^6	25	1000	1000	60	1.460	0.910	0.0150	W70	
R1955MC16F	1600	1600	1955	26500	3.51×10^6	30	1000	1000	60	1.460	0.910	0.0150	W70	

Distributed Gate Thyristors

Capsule Types

Part No.	V_{DRM}	V_{RRM}	I_{TAV}	I_{TSM}	I^2t	t_q	Typ. Reverse Recovery Charge			V_{T0}	r_T	R_{thJK}	Fig. No.	Package style
			T_K = 55°C	10 ms ½ sine V_R - ≤ 60% V_{RRM}		@ 200 V/µs	Q_{rr} @T_{JM}	@I_{TM} @T_{JM}	@-di/dt @T_{JM}	@T_{JM}	@T_{JM}	180° Sine		Outlines on pages O-01...O-30
➢ New	V	V	A	A	A^2s	µs	µC	A	A/µs	V	mΩ	K/W		
R2075MC12A	1200	1200	2075	29000	4.21×10^6	10	300	1000	60	1.390	0.167	0.0150	W70	
R2075MC12B	1200	1200	2075	29000	4.21×10^6	12	300	1000	60	1.390	0.167	0.0150	W70	
R2075MC12C	1200	1200	2075	29000	4.21×10^6	15	300	1000	60	1.390	0.167	0.0150	W70	
➢ R2295HA22F	2200	2200	2295	30000	4.50×10^6	30	875	1000	60	1.690	0.190	0.0110	W79	
➢ R2295HA22H	2200	2200	2295	30000	4.50×10^6	40	875	1000	60	1.690	0.190	0.0110	W79	
R2475ZC28M	2800	2800	2475	31000	4.81×10^6	70	3900	4000	60	1.504	0.174	0.0110	W13	
R2475ZC28N	2800	2800	2475	31000	4.81×10^6	100	3900	4000	60	1.504	0.174	0.0110	W13	
R2475ZC28R	2800	2800	2475	31000	4.81×10^6	140	3900	4000	60	1.504	0.174	0.0110	W13	
R2475ZD28M	2800	2800	2475	31000	4.81×10^6	70	3900	4000	60	1.504	0.174	0.0110	W46	
R2475ZD28N	2800	2800	2475	31000	4.81×10^6	100	3900	4000	60	1.504	0.174	0.0110	W46	
R2475ZD28R	2800	2800	2475	31000	4.81×10^6	140	3900	4000	60	1.504	0.174	0.0110	W46	
R2619ZC18J	1800	1800	2619	33800	5.71×10^6	50	1850	4000	60	1.308	0.173	0.0110	W13	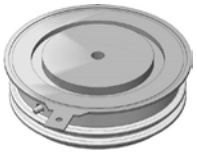
R2619ZC18K	1800	1800	2619	33800	5.71×10^6	60	1850	4000	60	1.308	0.173	0.0110	W13	
R2619ZC18L	1800	1800	2619	33800	5.71×10^6	65	1850	4000	60	1.308	0.173	0.0110	W13	
R2619ZC20J	2000	2000	2619	33800	5.71×10^6	50	1850	4000	60	1.308	0.173	0.0110	W13	W58 Weight 90 g
R2619ZC20K	2000	2000	2619	33800	5.71×10^6	60	1850	4000	60	1.308	0.173	0.0110	W13	
R2619ZC20L	2000	2000	2619	33800	5.71×10^6	65	1850	4000	60	1.308	0.173	0.0110	W13	
R2619ZC21J	2100	2100	2619	33800	5.71×10^6	50	1850	4000	60	1.308	0.173	0.0110	W13	
R2619ZC21K	2100	2100	2619	33800	5.71×10^6	60	1850	4000	60	1.308	0.173	0.0110	W13	
R2619ZC21L	2100	2100	2619	33800	5.71×10^6	65	1850	4000	60	1.308	0.173	0.0110	W13	
R2619ZC25J	2500	2100	2619	33800	5.71×10^6	50	1850	4000	60	1.308	0.173	0.0110	W13	
R2619ZC25K	2500	2100	2619	33800	5.71×10^6	60	1850	4000	60	1.308	0.173	0.0110	W13	
R2619ZC25L	2500	2100	2619	33800	5.71×10^6	65	1850	4000	60	1.308	0.173	0.0110	W13	
R2619ZD18J	1800	1800	2619	33800	5.71×10^6	50	1850	4000	60	1.308	0.173	0.0110	W46	
R2619ZD18K	1800	1800	2619	33800	5.71×10^6	60	1850	4000	60	1.308	0.173	0.0110	W46	
R2619ZD18L	1800	1800	2619	33800	5.71×10^6	65	1850	4000	60	1.308	0.173	0.0110	W46	
R2619ZD20J	2000	2000	2619	33800	5.71×10^6	50	1850	4000	60	1.308	0.173	0.0110	W46	
R2619ZD20K	2000	2000	2619	33800	5.71×10^6	60	1850	4000	60	1.308	0.173	0.0110	W46	
R2619ZD20L	2000	2000	2619	33800	5.71×10^6	65	1850	4000	60	1.308	0.173	0.0110	W46	
R2619ZD21J	2100	1800	2619	33800	5.71×10^6	50	1850	4000	60	1.308	0.173	0.0110	W46	
R2619ZD21K	2100	1800	2619	33800	5.71×10^6	60	1850	4000	60	1.308	0.173	0.0110	W46	
R2619ZD21L	2100	1800	2619	33800	5.71×10^6	65	1850	4000	60	1.308	0.173	0.0110	W46	
R2619ZD25J	2500	2100	2619	33800	5.71×10^6	50	1850	4000	60	1.308	0.173	0.0110	W46	
R2619ZD25K	2500	2100	2619	33800	5.71×10^6	60	1850	4000	60	1.308	0.173	0.0110	W46	
R2619ZD25L	2500	2100	2619	33800	5.71×10^6	65	1850	4000	60	1.308	0.173	0.0110	W46	
R2620ZC22J	2200	2200	2620	33800	5.71×10^6	50	2100	4000	60	1.500	0.143	0.0110	W13	
R2620ZC22K	2200	2200	2620	33800	5.71×10^6	60	2100	4000	60	1.500	0.143	0.0110	W13	
R2620ZC22L	2200	2200	2620	33800	5.71×10^6	65	2100	4000	60	1.500	0.143	0.0110	W13	
R2620ZC25J	2500	2500	2620	33800	5.71×10^6	50	2100	4000	60	1.500	0.143	0.0110	W13	W70 Weight 550 g
R2620ZC25K	2500	2500	2620	33800	5.71×10^6	60	2100	4000	60	1.500	0.143	0.0110	W13	
R2620ZC25L	2500	2500	2620	33800	5.71×10^6	65	2100	4000	60	1.500	0.143	0.0110	W13	
R2620ZD22J	2200	2200	2620	33800	5.71×10^6	50	2100	4000	60	1.500	0.143	0.0110	W46	
R2620ZD22K	2200	2200	2620	33800	5.71×10^6	60	2100	4000	60	1.500	0.143	0.0110	W46	
R2620ZD22L	2200	2200	2620	33800	5.71×10^6	65	2100	4000	60	1.500	0.143	0.0110	W46	
R2620ZD25J	2500	2500	2620	33800	5.71×10^6	50	2100	4000	60	1.500	0.143	0.0110	W46	
R2620ZD25K	2500	2500	2620	33800	5.71×10^6	60	2100	4000	60	1.500	0.143	0.0110	W46	
R2620ZD25L	2500	2500	2620	33800	5.71×10^6	65	2100	4000	60	1.500	0.143	0.0110	W46	
R2714ZC14H	1400	1400	2714	35600	6.34×10^6	40	1400	4000	60	1.250	0.163	0.0110	W13	
R2714ZC14J	1400	1400	2714	35600	6.34×10^6	50	1400	4000	60	1.250	0.163	0.0110	W13	
R2714ZC14K	1400	1400	2714	35600	6.34×10^6	60	1400	4000	60	1.250	0.163	0.0110	W13	
R2714ZC18H	1800	1800	2714	35600	6.34×10^6	40	1400	4000	60	1.250	0.163	0.0110	W13	
R2714ZC18J	1800	1800	2714	35600	6.34×10^6	50	1400	4000	60	1.250	0.163	0.0110	W13	
R2714ZC18K	1800	1800	2714	35600	6.34×10^6	60	1400	4000	60	1.250	0.163	0.0110	W13	

Distributed Gate Thyristors

Capsule Types

Part No.	V_{DRM}	V_{RRM}	I_{TAV}	I_{TSM}	I^2t	t_q	Typ. Reverse Recovery Charge			V_{T0}	r_T	R_{thJK}	Fig. No.	Package style
			T_K = 55°C	10 ms ½ sine V_R - ≤ 60% V_{RRM}		@ 200 V/µs	Q_{rr} @T_{JM}	@I_{TM} @T_{JM}	@-di/dt @T_{JM}	@T_{JM}	@T_{JM}	180° Sine		Outlines on pages O-01...O-30
➢ New	V	V	A	A	A^2s	µs	µC	A	A/µs	V	mΩ	K/W		
R2714ZD14H	1400	1400	2714	35600	6.34 x 10^6	40	1400	4000	60	1.250	0.163	0.0110	W46	
R2714ZD14J	1400	1400	2714	35600	6.34 x 10^6	50	1400	4000	60	1.250	0.163	0.0110	W46	
R2714ZD14K	1400	1400	2714	35600	6.34 x 10^6	60	1400	4000	60	1.250	0.163	0.0110	W46	
R2714ZD18H	1800	1800	2714	35600	6.34 x 10^6	40	1400	4000	60	1.250	0.163	0.0110	W46	
R2714ZD18J	1800	1800	2714	35600	6.34 x 10^6	50	1400	4000	60	1.250	0.163	0.0110	W46	
R2714ZD18K	1800	1800	2714	35600	6.34 x 10^6	60	1400	4000	60	1.250	0.163	0.0110	W46	
R3047TC24K *	2400	2400	3047	50000	12.5 x 10^6	60	2100	4000	60	1.580	0.170	0.0080	W14	
R3047TC24M *	2400	2400	3047	50000	12.5 x 10^6	70	2100	4000	60	1.580	0.170	0.0080	W14	
R3047TC24N *	2400	2400	3047	50000	12.5 x 10^6	100	2100	4000	60	1.580	0.170	0.0080	W14	
R3047TC28K *	2800	2800	3047	50000	12.5 x 10^6	60	2100	4000	60	1.580	0.170	0.0080	W14	
R3047TC28M *	2800	2800	3047	50000	12.5 x 10^6	70	2100	4000	60	1.580	0.170	0.0080	W14	
R3047TC28N *	2800	2800	3047	50000	12.5 x 10^6	100	2100	4000	60	1.580	0.170	0.0080	W14	
➢ R3115TJ24J	2400	2400	3115	56000	15.68 x 10^6	50	3350	2000	60	1.884	0.120	0.0080	W81	
➢ R3115TJ24K	2400	2400	3115	56000	15.68 x 10^6	60	3350	2000	60	1.884	0.120	0.0080	W81	
➢ R3115TJ28J	2800	2800	3115	56000	15.68 x 10^6	50	3350	2000	60	1.884	0.120	0.0080	W81	
➢ R3115TJ28K	2800	2800	3115	56000	15.68 x 10^6	60	3350	2000	60	1.884	0.120	0.0080	W81	
R3370ZC12C	1200	1200	3370	43900	9.64 x 10^6	15	600	4000	60	1.353	0.064	0.0110	W13	
R3370ZC12D	1200	1200	3370	43900	9.64 x 10^6	20	600	4000	60	1.353	0.064	0.0110	W13	
R3370ZC12E	1200	1200	3370	43900	9.64 x 10^6	25	600	4000	60	1.353	0.064	0.0110	W13	
R3559TC20K *	2000	2000	3559	38900	7.57 x 10^6	60	1750	4000	60	1.173	0.155	0.0080	W14	
R3559TC20M *	2000	2000	3559	38900	7.57 x 10^6	70	1750	4000	60	1.173	0.155	0.0080	W14	
R3559TC20N *	2000	2000	3559	38900	7.57 x 10^6	100	1750	4000	60	1.173	0.155	0.0080	W14	
R3636EC20K *	2000	2000	3636	38900	7.57 x 10^6	60	1750	4000	60	1.173	0.155	0.0075	W55	
R3636EC20M *	2000	2000	3636	38900	7.57 x 10^6	70	1750	4000	60	1.173	0.155	0.0075	W55	
R3636EC20N *	2000	2000	3636	38900	7.57 x 10^6	100	1750	4000	60	1.173	0.155	0.0075	W55	
R3708FC45V *	4500	3000	3708	50000	12.5 x 10^6	250	8800	4000	60	1.473	0.156	0.0065	W15	
R3708FC45W *	4500	3000	3708	50000	12.5 x 10^6	300	8800	4000	60	1.473	0.156	0.0065	W15	
R3968FC24K *	2400	2400	4001	66000	21.78 x 10^6	60	2600	4000	60	1.453	0.125	0.0065	W15	
R3968FC24M *	2400	2400	4001	66000	21.78 x 10^6	70	2600	4000	60	1.453	0.125	0.0065	W15	
R3968FC24N *	2400	2400	4001	66000	21.78 x 10^6	100	2600	4000	60	1.453	0.125	0.0065	W15	
R3968FC28K *	2800	2800	4001	66000	21.78 x 10^6	60	2600	4000	60	1.453	0.125	0.0065	W15	
R3968FC28M *	2800	2800	4001	66000	21.78 x 10^6	70	2600	4000	60	1.453	0.125	0.0065	W15	
R3968FC28N *	2800	2800	4001	66000	21.78 x 10^6	100	2600	4000	60	1.453	0.125	0.0065	W15	
➢ R5370EA18J	1800	1800	5370	70000	24.5 x 10^6	50	3000	1000	60	1.661	0.071	0.0050	W107	
➢ R5370EA18K	1800	1800	5370	70000	24.5 x 10^6	60	3000	1000	60	1.661	0.071	0.0050	W107	
➢ R5370EA22J	2200	2200	5370	70000	24.5 x 10^6	50	3000	1000	60	1.661	0.071	0.0050	W107	
➢ R5370EA22K	2200	2200	5370	70000	24.5 x 10^6	60	3000	1000	60	1.661	0.071	0.0050	W107	

* not for new designs, consult factory for new product options

W79 Weight xxx g

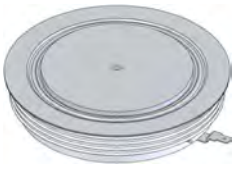

W81 Weight 1200 g

W107 Weight xxx g

Distributed Gate Thyristors

Asymmetric Thyristors

These devices are available up to a voltage of 2800V. They exhibit very fast turn-on times and are capable of very high values of both critical di/dt and dv/dt. For the device type, they also exhibit high current ratings in excess of 1000A. Asymmetric construction optimizes the forward losses against the turn-off losses and gives the best performance in their voltage class.

Part No.	V_{DRM}	V_{RRM}	I_{TAV}	I_{TSM}	I^2t	t_{gd}	typ. t_q	$(di/dt)_{cr}$	$(dv/dt)_{cr}$	V_{T0}	r_T	T_{JM}	R_{thJK}	Fig. No.
			T_K = 55°C	10 ms ½ sine		25°c typ.	@ 200 V/µs	@ T_{JM}	@ T_{JM}	@T_{JM}			180° Sine	
	V	V	A	A	A^2s	µs	µC	A	A/µs	V	mΩ	°C	K/W	
A0516YC240	2400	10	516	5700	1.51×10^3	0.5	55	2000	3000	1.630	0.850	125	0.050	W58
A0516YC280	2800	10	516	5700	1.51×10^3	0.5	55	2000	3000	1.630	0.850	125	0.050	W58
A1237NC240	2400	30	1237	18000	1.62×10^6	0.9	30	2000	3000	1.707	0.212	125	0.024	W11
A1237NC280	2800	30	1237	18000	1.62×10^6	0.9	30	2000	3000	1.707	0.212	125	0.024	W11

Outlines on pages O-01...O-30

W11 Weight 510 g

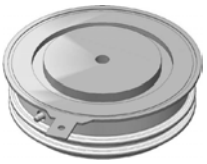

W58 Weight 90 g

Pulse Thyristors

IXYS UK Westcode Ltd are at the forefront of solid state pulsed power technology, offering custom solutions to complex pulsed power problems.
Standard Devices with voltage ratings to 2.5kV, pulsed currents to 150kA peak and di/dt capabilities to over 30kA/µs are available. Please consult factory for other requirements for voltage ratings up to 4.5kV and pulsed current ratings >200kA.

Part No.	V_{DRM}	V_{RRM}	V_{DC}	I_{PULSE}	$(di/dt)_{cr}$	V_{T0}	r_T	T_{JM}	R_{thJC}	Fig. No.	Package style
	V_{GK} = 2 V		V_{GK} = 2 V			@T_{JM}			180° Sine		Outlines on pages O-01...O-30
	V	V	V	kA	kA/µs	V	mΩ	°C	K/W		
Y200CKC250	2500	2000	1500	20	5	1.216	2.196	125	0.065	W34	
Y500CNC250	2500	2000	1500	50	11	1.755	1.122	125	0.027	W36	

W34 Weight 120 g

W36 Weight 500 g

Gate Turn Off Thyristors

IXYS UK offers a broad range of high specification devices with voltage ratings to 4.5kV (2.8kV DC link) and controllable current ratings of up to 4kA are available to meet the toughest demands in applications such as traction propulsion and auxiliaries, AC industrial drives, FACT's and active VAr controllers. Offering both symmetrical devices for applications with a reverse blocking requirement e.g. current sourced inverters and asymmetric blocking devices for applications where no reverse blocking requirement exists e.g. voltage sourced inverters.

Gate Turn-off Thyristors are still the component of choice when it comes to very high power converters and we remain totally commited to this technology for the foreseeable future with an active program for continued product improvement.

Part No.	V_{DRM}	V_{RRM}	I_{TGQM} @ C_S		I_{TAV}	I_{TSM}	I^2t	Typ. Switching Times		V_T	T_{JM}	R_{thJK}	Fig.
	V_{GK} = -2V				T_K = 55°C	10 ms ½ sine $V_R \leq 10$ V		t_{gt}	t_{gq}	I_T = I_{TGQM}		180° Sine	No.
➢ New *	V	V	A	µC	A	kA	kA^2s	µs	µs	V	°C	K/W	
G1000NC450	4500	18	1000	2.0	545	8.00	320 x 10^3	4.5	14	4.0	125	0.0270	W36
G1000QC250	2500	18	1000	1.0	615	8.00	320 x 10^3	2.8	13	2.5	125	0.0380	W35
G1000QC450	4500	18	1000	1.0	443	6.50	211 x 10^3	3.0	13	4.0	125	0.0380	W35
G2000HF250	2500	18	2000	4.0	1030	16.00	1.28 x 10^6	3.0	25	2.8	125	0.0220	W85
G2000HF450	4500	18	2000	4.0	890	13.70	938 x 10^3	4.0	25	3.5	125	0.0220	W85
G2500HF250	2500	18	2500	6.0	1085	16.00	1.28 x 10^6	3.0	25	3.1	125	0.0200	W85
G3000TF250	2500	18	3000	5.0	1690	30.00	4.5 x 10^6	3.5	26	2.5	125	0.0120	W86
G3000TF450	4500	18	3000	6.0	1381	24.00	2.88 x 10^6	4.0	22	4.0	125	0.0120	W86
➢ **G4000EF450**	4500	18	4000	6.0	1480	26.00	3.38 x 10^6	4.0	30	4.4	125	0.0110	W104
H0500KC200	2000	2000	500	1.0	280	3.00	45 x 10^3	2.0	5	3.2	125	0.0650	W34
H0500KC20Y	2000	100	500	1.0	280	3.00	45 x 10^3	2.0	5	3.2	125	0.0650	W34
H0500KC25D	2500	2000	500	1.0	280	3.00	45 x 10^3	2.0	5	3.2	125	0.0650	W34
H0500KC25Y	2500	100	500	1.0	280	3.00	45 x 10^3	2.0	5	3.2	125	0.0650	W34
H0700KC140	1400	1400	700	1.5	360	4.00	80 x 10^3	3.0	5	2.75	125	0.0630	W34
H0700KC14Y	1400	100	700	1.5	360	4.00	80 x 10^3	3.0	5	2.75	125	0.0630	W34
H0700KC17D	1700	1400	700	1.5	360	4.00	80 x 10^3	3.0	5	2.75	125	0.0630	W34
H0700KC17Y	1700	100	700	1.5	360	4.00	80 x 10^3	3.0	5	2.75	125	0.0630	W34
H1200NC200	2000	2000	1200	3.0	670	10.50	550 x 10^3	3.0	12	3.3	125	0.0270	W36
H1200NC20Y	2000	100	1200	3.0	670	10.50	550 x 10^3	3.0	12	3.3	125	0.0270	W36
H1200NC25D	2500	2000	1200	3.0	670	10.50	550 x 10^3	3.0	12	3.3	125	0.0270	W36
H1200NC25Y	2500	100	1200	3.0	670	10.50	550 x 10^3	3.0	12	3.3	125	0.0270	W36
S0300SR12Y	1200	100	480	1.0	215	3.50	61.2 x 10^3	3.5	9	2.4	125	0.1300	W87
S0500YC20Y	2000	100	500	1.0	275	4.00	80 x 10^3	3.5	10	2.5	125	0.0870	W93
S0500YC25Y	2500	100	500	1.0	275	4.00	80 x 10^3	3.5	10	2.5	125	0.0870	W93
S0500KC200	2000	2000	500	1.0	330	4.00	80 x 10^3	3.5	10	2.5	125	0.0650	W34
S0500KC20Y	2000	100	500	1.0	330	4.00	80 x 10^3	3.5	10	2.5	125	0.0650	W34
S0500KC25D	2500	2000	500	1.0	330	4.00	80 x 10^3	3.5	10	2.5	125	0.0650	W34
S0500KC25Y	2500	100	500	1.0	330	4.00	80 x 10^3	3.5	10	2.5	125	0.0650	W34
S0700KC140	1400	1400	700	1.5	430	5.00	125 x 10^3	3.0	10	2.2	125	0.0630	W34
S0700KC14Y	1400	100	700	1.5	430	5.00	125 x 10^3	3.0	10	2.2	125	0.0630	W34
S0700KC17D	1700	1400	700	1.5	430	5.00	125 x 10^3	3.0	10	2.2	125	0.0630	W34
S0700KC17Y	1700	100	700	1.5	430	5.00	125 x 10^3	3.0	10	2.2	125	0.0630	W34
S1000NC300	3000	3000	1000	2.0	600	10.00	500 x 10^3	5.0	19	3.5	125	0.0270	W36
S1000NC30Y	3000	100	1000	2.0	600	10.00	500 x 10^3	5.0	19	3.5	125	0.0270	W36
S1000NC36D	3600	2880	1000	2.0	600	10.00	500 x 10^3	5.0	19	3.5	125	0.0270	W36
S1000NC36Y	3600	100	1000	2.0	600	10.00	500 x 10^3	5.0	19	3.5	125	0.0270	W36
S1200NC200	2000	2000	1200	3.0	790	13.00	840 x 10^3	4.5	19	2.7	125	0.0270	W36
S1200NC20Y	2000	100	1200	3.0	790	13.00	840 x 10^3	4.5	19	2.7	125	0.0270	W36
S1200NC25D	2500	2000	1200	3.0	790	13.00	840 x 10^3	4.5	19	2.7	125	0.0270	W36
S1200NC25Y	2500	100	1200	3.0	790	13.00	840 x 10^3	4.5	19	2.7	125	0.0270	W36

***** New improved product. Please consult factory for more details

Outlines on pages O-01...O-30

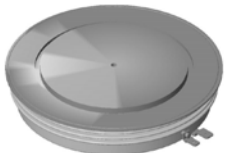
W33 Weight 1500 g

W34 Weight 120 g

W35 Weight 300 g

W36 Weight 500 g

W85 Weight 990 g

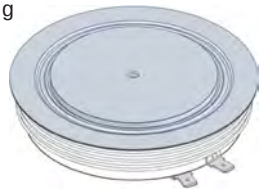
W86 Weight 1240 g

W93 Weight 90 g

W104 Weight 1500 g

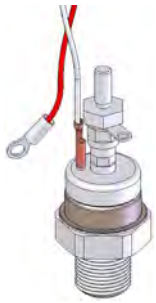
W87 Weight 250 g

Insulated Gate Bi-polar Transistors
Capsule Types

As a pioneer of Press-Pack IGBT technology, we are able to offer a range of class leading devices with voltage ratings of 1.7kV (900V DC link), 2.5kV (1.25kV DC link), 4.5kV (2.8kV DC link) and 6.5kV (3.6kV DC link). The construction of these devices is totally free from wire and solder bonds which all but eliminates the problems of mechanical fatigue associated with conventional modules. Internal stray inductance in both the gate connections and emitter connections is vastly reduced when compared to conventional modules leading to improved ruggedness and short circuit behavior, which is further enhanced by direct cooling of the emitter side of the chip.

These devices are based on a state of the art soft punch through (SPT++) process, which yields exceptional values of VCE(sat) and soft switching behavior despite the high voltage ratings. The devices feature a positive temperature coefficient making them suitable for reliable parallel operation. Devices are available with or without integral anti-parallel diode; a range of complimentary High Power Sonic Diodes optimized for use with these IGBTs are available now with a new generation using improved technology in development. Please contact your representative for more information.

The press-pack IGBTs exhibit exceptional power cycling performance; typically an order of magnitude better than modules, making them highly suited to applications such as metals and traction drive systems where there are repeated cyclic power demands. Press-pack IGBTs have a stable short circuit failure mode which, as well as safety benefits, makes them an ideal choice for medium and high voltage applications where series connection is required. Stable short circuit failure mode allows for the design in of n+ redundancy wihtout additional bypass switches and costly explosion proof enclosures. Typical examples include HVDC, FACTs, Active VAr controllers / compensators and medium voltage drives. In applications above 4MW press-pack IGBTs offer exceptional power desnisty, far exceeding that achievble with comprable modules in multi-level / MMC based converters.

These PPIGBT's are largely backwardly compatible with standard 2.5kV and 4.5kV GTOs in many applications such as AC drives. This makes these parts a simple and economical path to upgrade or refurbish equipment that previously used GTOs, such as locomotives or medium voltage drives.They are suitable for all cooling options including direct liquid immersion. Complementary gate drives, mounting clamps and passive components available.

Part No.	V_{CES}	I_C	I_{CM}	$V_{CE(sat)}$	IGBT Switching		V_F	Diode Recovery			T_{JM}	R_{thJK}		Fig. No.
				@ I_C	Typical		$I_F = I_C$	Typical				IGBT	Diode	
					E_{ON}	E_{OFF}		I_{rm}	t_{rr}	Q_r				
➢ New *	V	A	A	V	J	J	V	A	µs	µC	°C	K/W	K/W	
➢ **T0960VC17G**	1700	960	1920	3	0.47	0.8	2.05	540	0.6	310	125	0.0338	0.0361	W67
T0360ND25A	2500	360	720	3.05	0.28	0.66	2.25	320	1.2	300	125	0.0541	0.0730	W40
T0500ND25E	2500	500	1000	3.05	0.65	0.87	N/A	N/A	N/A	N/A	125	0.0386	N/A	W40
T0570VD25G	2500	570	1140	3.05	0.44	1.05	2.07	400	1.3	420	125	0.0338	0.0365	W67
T0850VD25E	2500	850	1700	3.05	1.10	1.60	N/A	N/A	N/A	N/A	125	0.0225	N/A	W67
T1200TD25A	2500	1200	2400	3.15	1.50	2.10	2.50	800	0.97	840	125	0.0169	0.0292	W41
T1500TD25E	2500	1500	3000	3.05	1.97	2.65	N/A	N/A	N/A	N/A	125	0.0129	N/A	W41
T2250AD25E	2500	2250	4500	3.05	3.00	4.20	N/A	N/A	N/A	N/A	125	0.0085	N/A	W71

Outlines on pages O-01...O-30

W40 Weight 430 g

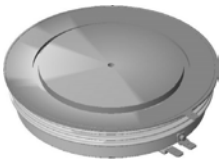

W41 Weight 1200 g

W67 Weight 650 g

W71 Weight 1500 g

Insulated Gate Bi-polar Transistors
Capsule Types

Part No.	V_{CES}	I_C	I_{CM}	$V_{CE(sat)}$ @ I_C	IGBT Switching Typical		V_F	Diode Recovery Typical			T_{JM}	R_{thJK}		Fig. No.
					E_{ON}	E_{OFF}	$I_F = I_C$	I_{rm}	t_{rr}	Q_r		IGBT	Diode	
➢ New	V	A	A	V	J	J	V	A	µs	µC	°C	K/W	K/W	
➢ **T0115QB45G**	4500	115	230	3.60	1.00	0.65	3.45	100	1.7	150	125	0.1092	0.1728	W109
T0240NB45E	4500	240	480	3.60	1.50	1.10	N/A	N/A	N/A	N/A	125	0.0546	N/A	W40
T0340VB45G	4500	340	680	3.50	2.90	1.40	3.45	220	2.3	500	125	0.0364	0.0576	W67
T0510VB45E	4500	510	1020	3.60	4.20	2.10	N/A	N/A	N/A	N/A	125	0.0243	N/A	W67
T0600TB45A	4500	600	1200	3.70	4.60	2.90	3.70	640	1.2	700	125	0.0218	0.0432	W41
T0800TB45E	4500	800	1600	3.50	5.10	1.90	N/A	N/A	N/A	N/A	125	0.0156	N/A	W41
T0800EB45G	4500	800	1600	3.50	5.10	4.90	3.45	800	1.7	1020	125	0.0156	0.0247	W44
T0900EB45A	4500	900	1800	3.60	4.30	3.60	3.90	610	1.6	920	125	0.0140	0.0260	W44
T1200EB45E	4500	1200	2400	3.60	5.70	5.10	N/A	N/A	N/A	N/A	125	0.0080	N/A	W44
T1600GB45G	4500	1600	3200	3.50	12.00	8.70	3.45	1380	1.7	1970	125	0.0078	0.0123	W45
T1800GB45A	4500	1800	3600	3.60	11.00	10.50	3.90	1600	1.6	2000	125	0.0073	0.0144	W45
T2400GB45E	4500	2400	4800	3.60	13.00	13.00	N/A	N/A	N/A	N/A	125	0.0052	N/A	W45
➢ **T2960BB45E**	4500	3000	6000	3.60	16.00	16.00	N/A	N/A	N/A	N/A	125	0.0042	N/A	W110
T0258HF65G*	6500	258	516	4.80	1.80	1.45	3.85	300	1.2	410	125	0.0328	0.0567	W95
T0385HF65E*	6500	385	770	4.80	2.70	2.20	N/A	N/A	N/A	N/A	125	0.0219	N/A	W95
T0600AF65G*	6500	600	1030	4.80	4.20	3.38	3.45	700	1.2	950	125	0.0141	0.0243	W98
T0900AF65E*	6500	900	1800	4.80	6.30	5.10	N/A	N/A	N/A	N/A	125	0.0094	N/A	W98
T0900DF65A*	6500	900	1800	4.80	6.30	5.10	3.40	950	1.2	1500	125	0.0094	0.0155	W96
T1290BF65A*	6500	1290	2580	4.80	9.00	7.30	3.60	1400	1.1	1900	125	0.0066	0.0122	W103
T1375DF65E*	6500	1375	2750	4.80	9.60	7.70	N/A	N/A	N/A	N/A	125	0.0062	N/A	W96
T1890BF65E*	6500	1890	3780	4.80	13.20	10.60	N/A	N/A	N/A	N/A	125	0.0045	N/A	W103

* Consult factory for details

Outlines on pages O-01...O-30

W40 Weight 430 g

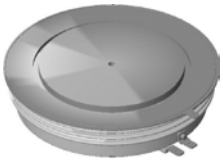
W41 Weight 1200 g

W44 Weight 1200 g

W45 Weight 2000 g

W67 Weight 650 g

W95 Weight 825 g

W96 Weight 1500 g

W98 Weight 1800 g

W103 Weight 3200 g

W109 Weight 360 g

W110 Weight 2800 g

Press-Pack IGBT Gate Drive Units

The C044BG400 IGBT Gate Driver is a low power consumption driver with on board VCE desaturation detection for high reliability application. The driver features a fibre-optic communication interface for drive, status and switching feedback signals. A fully supervised DC/DC converter with EMI filtering, low coupling capacitance and high partial discharge level is integrated into the board. The high voltage collector sense and gate interface are implemented on a separate card to allow close coupling to the IGBT. A range of pre-configured boards is available to complement IXYS UK's range of press-pack IGBTs – other applications on request.

Gate Drive Part Number	IGBT Type
C0044BG400SBX	T0115QB45G
C0044BG400SBL	T0240NB45E
C0044BG400SBQ	T0340VB45G
C0044BG400SBA	T0360ND25A
C0044BG400SBB	T0500ND25E
C0044BG400SBE	T0510VB45E
C0044BG400SBF	T0570VD25G
C0044BG400SBM	T0600TB45A
C0044BG400SBG	T0800EB45G
C0044BG400SBN	T0800TB45E
C0044BG400SBH	T0850VD25E
C0044BG400SBP	T0900EB45A
C0044BG400SBR	T1200EB45E
C0044BG400SBC	T1200TD25A
C0044BG400SBD	T1500TD25E
C0044BG400SBJ	T1600GB45G
C0044BG400SBS	T1800GB45A
C0044BG400SBV	T2250AD25E
C0044BG400SBT	T2400GB45E
C0044BG400SBW	T2960BB45E

FEATURES

- High reliability topology
- Designed for ultra low power consumption
- Build in DC/DC-converter with soft start
- Integrated input filter for low EMI
- Separate low impedance path for parasitic EMI currents
- PD-Voltage levels available up to 11 kV on request.
- Low impedance from gate to emitter at start-up and power fail
- Monitoring of all secondary supply voltages
- Monitoring of IGBT switching status (VCE-de-sat detection)
- Soft switch-OFF at V_{CE}-de-sat fault condition
- Fiber-optic links for switching commands and status control
- Low light protection for input signal
- Short-pulse suppression. configurable
- Balanced propagation delay time
- Gate Current up to 44 A
- Optional gate-speed-up capacitors

APPLICATION

- Large and medium drives
- Renewable generation.
- Utilities scale converters

Dual Thyristor Modules

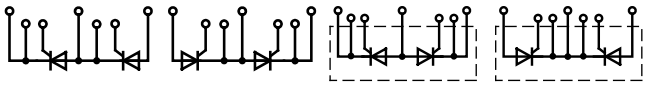

MCR... MCC... MCA... MCK...

IXYS UK Westcode Ltd. has UL Certification for most modules (Underwriters Laboratories Inc). See the UL Listing.

Part No.	V_{RRM} V_{DRM}	I_{TAV}	@ T_C	I_{TRMS}	I_{TSM} 125°C 10 ms	V_{T0}	r_T	T_{VJM}	R_{thJC} per Die	R_{thCH} per Die	Fig. No.
	V	A	°C	A	A	V	mΩ	°C	K/W	K/W	
MCC160-30io3	3000	170	85	385	3650	1.200	2.300	125	0.110	0.0400	W102
MCC160-36io3	3600	170	85	385	3650	1.200	2.300	125	0.110	0.0400	W102
MCC220-28io3	2800	235	85	543	5000	0.900	1.100	125	0.110	0.0400	W102
MCC265-24io3	2400	280	85	655	6900	0.800	0.700	125	0.110	0.0400	W102
MCC320-30io2	3000	327	85	765	5000	1.150	0.800	125	0.062	0.0200	W74
MCC320-36io2	3600	327	85	765	5000	1.150	0.800	125	0.062	0.0200	W74
MCC325-14io3	1400	345	85	785	7650	0.750	0.500	125	0.110	0.0400	W102
MCC325-18io3	1800	345	85	785	7650	0.750	0.500	125	0.110	0.0400	W102
MCC380-28io2	2800	395	85	620	8100	1.000	0.650	125	0.062	0.0200	W74
MCC431-20io2	2000	429	85	1020	10900	1.000	0.410	125	0.062	0.0200	W74
MCC431-22io2	2200	429	85	1020	10900	1.000	0.410	125	0.062	0.0200	W74
MCC431-24io2	2400	429	85	1020	10900	1.000	0.410	125	0.062	0.0200	W74
MCC500-18io1	1800	500	89	1294	16500	0.850	0.270	125	0.062	0.0200	W63
MCC500-22io1	2200	500	80	1071	14000	0.880	0.460	125	0.0620	0.0200	W63
MCK500-18io1	1800	500	89	1294	16500	0.850	0.270	125	0.0620	0.0200	W63
MCK500-22io1	2200	500	80	1071	14000	0.880	0.460	125	0.0620	0.0200	W63
MCA500-12io1	1200	500	89	1294	16500	0.850	0.270	125	0.0620	0.0200	W63
MCA500-16io1	1600	500	80	1071	14000	0.880	0.460	125	0.0620	0.0200	W63
MCC501-12io2	1200	503	85	1195	14500	0.850	0.300	125	0.0620	0.0200	W74
MCC501-14io2	1400	503	85	1195	14500	0.850	0.300	125	0.0620	0.0200	W74
MCC501-16io2	1600	503	85	1195	14500	0.850	0.300	125	0.0620	0.0200	W74
MCC501-18io2	1800	503	85	1195	14500	0.850	0.300	125	0.0620	0.0200	W74
MCC550-12io1	1200	550	85	1318	18000	0.839	0.244	125	0.062	0.0200	W63
MCC550-16io1	1600	550	85	1318	18000	0.839	0.244	125	0.062	0.0200	W63
MCK550-12io1	1200	550	85	1318	18000	0.839	0.244	125	0.062	0.0200	W63
MCK550-16io1	1600	550	85	1318	18000	0.839	0.244	125	0.062	0.0200	W63
MCA550-18io1	1800	550	85	1318	18000	0.839	0.244	125	0.062	0.0200	W63
MCA550-22io1	2200	550	85	1318	18000	0.839	0.244	125	0.062	0.0200	W63
MCC552-12io2	1200	550	85	1300	15800	0.770	0.259	125	0.0620	0.0200	W74
MCC552-14io2	1400	550	85	1300	15800	0.770	0.259	125	0.0620	0.0200	W74
MCC552-16io2	1600	550	85	1300	15800	0.770	0.259	125	0.0620	0.0200	W74
MCC500-30io7	3000	500	85	1181	16200	1.079	0.422	125	0.0500	0.0160	W88
MCC500-36io7	3600	500	85	1181	16200	1.079	0.422	125	0.0500	0.0160	W88
MCR500-30io7	3000	500	85	1181	16200	1.079	0.422	125	0.0500	0.0160	W88
MCR500-36io7	3600	500	85	1181	16200	1.079	0.422	125	0.0500	0.0160	W88
MCC580-28io7	2800	581	85	1372	18900	0.926	0.313	125	0.0500	0.0160	W88
MCR580-28io7	2800	581	85	1372	18900	0.926	0.313	125	0.0500	0.0160	W88
MCC650-24io7	2400	646	85	1542	22100	0.874	0.227	125	0.0500	0.0160	W88
MCR650-24io7	2400	646	85	1542	22100	0.874	0.227	125	0.0500	0.0160	W88
MCC720-14io7	1400	719	85	1633	25200	0.823	0.241	130	0.0500	0.0160	W88
MCC720-18io7	1800	719	85	1633	25200	0.823	0.241	130	0.0500	0.0160	W88
MCR720-14io7	1400	719	85	1633	25200	0.823	0.241	130	0.0500	0.0160	W88
MCR720-18io7	1800	719	85	1633	25200	0.823	0.241	130	0.0500	0.0160	W88

Single Thyristor Modules

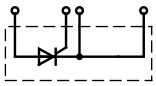

MCO

Part No.	V_{RRM} / V_{DRM}	I_{TAV}	@ T_C	I_{TRMS}	I_{TSM} 125°C 10ms	V_{T0}	r_T	T_{VJM}	R_{thJC} per Die	R_{thCH} per Die	Fig. No.
➢ New *	V	A	°C	A	A	V	mΩ	°C	K/W	K/W	
MCO560-30io1	3000	560	85	879	18900	1.050	0.470	125	0.0420	0.0100	W73
MCO560-36io1	3600	560	85	879	18900	1.050	0.470	125	0.0420	0.0100	W73
MCO635-28io1	2800	635	85	997	20700	0.950	0.350	125	0.0420	0.0100	W73
MCO741-22io1	2200	765	85	2110	29000	0.850	0.277	125	0.0420	0.0100	W73
MCO801-14io1	1400	830	85	2335	30000	0.800	0.240	130	0.0420	0.0100	W73
MCO801-18io1	1800	830	85	2335	30000	0.800	0.240	130	0.0420	0.0100	W73
➢ **N4340TJ180MBR**	1800	1110	85	3500	55000	0.886	0.105	125	0.0306	0.0035	W116
➢ **N4340TJ220MBR**	2200	1110	85	3500	55000	0.886	0.105	125	0.0306	0.0035	W116

***** Consult factory for details

Outlines on pages O-01...O-30

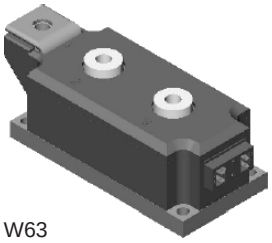

W63

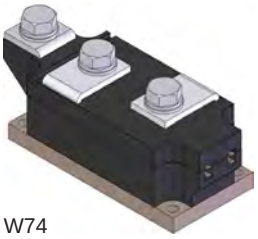

W74

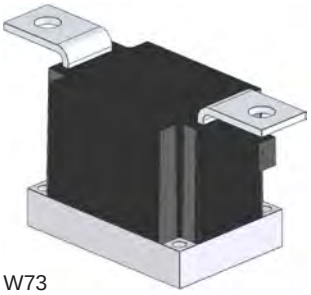

W73

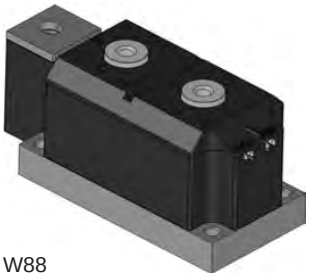

W88

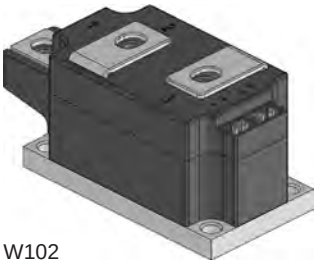

W102

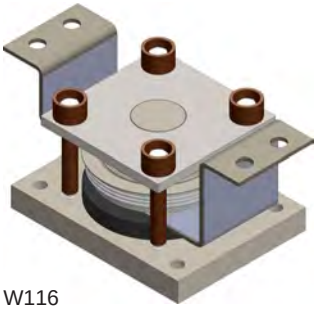

W116

Thyristor / Diode Modules

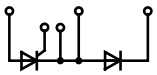
MCD...

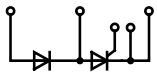
MDC...

IXYS UK Westcode Ltd. has UL Certification for most modules (Underwriters Laboratories Inc). See the UL Listing.

Part No.	V_{RRM} V_{DRM} V	I_{TAV} A	@ T_C °C	I_{TRMS} A	I_{TSM} 125°C 10 ms A	V_{T0} V	r_T mΩ	T_{VJM} °C	R_{thJC} per Die K/W	R_{thCH} per Die K/W	Fig. No.	Package style Outline drawings on page O-01...O-30
MCD160-30io3	3000	170	85	385	3650	1.200	2.300	125	0.110	0.0400	W102	
MCD160-36io3	3600	170	85	385	3650	1.200	2.300	125	0.110	0.0400	W102	
MDC160-30io3	3000	170	85	385	3650	1.200	2.300	125	0.110	0.0400	W102	
MDC160-36io3	3600	170	85	385	3650	1.200	2.300	125	0.110	0.0400	W102	
MCD220-28io3	2800	235	85	543	5000	0.900	1.100	125	0.110	0.0400	W102	
MDC220-28io3	2800	235	85	543	5000	0.900	1.100	125	0.110	0.0400	W102	
MCD265-24io3	2400	280	85	655	6900	0.800	0.700	125	0.110	0.0400	W102	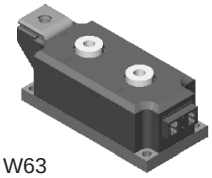 W63
MDC265-24io3	2400	280	85	655	6900	0.800	0.700	125	0.110	0.0400	W102	
MCD320-30io2	3000	327	85	765	5000	1.150	0.800	125	0.065	0.0200	W74	
MCD320-36io2	3600	327	85	765	5000	1.150	0.800	125	0.065	0.0200	W74	
MDC320-30io2	3000	327	85	765	5000	1.150	0.800	125	0.065	0.0200	W74	
MDC320-36io2	3600	327	85	765	5000	1.150	0.800	125	0.065	0.0200	W74	
MCD325-14io3	1400	345	85	785	7650	0.750	0.500	125	0.110	0.0400	W102	
MCD325-18io3	1800	345	85	785	7650	0.750	0.500	125	0.110	0.0400	W102	
MDC325-14io3	1400	345	85	785	7650	0.750	0.500	125	0.110	0.0400	W102	
MDC325-18io3	1800	345	85	785	7650	0.750	0.500	125	0.110	0.0400	W102	
MCD380-28io2	2800	395	85	620	8100	1.000	0.650	125	0.062	0.0200	W74	W74
MDC380-28io2	2800	395	85	620	8100	1.000	0.650	125	0.062	0.0200	W74	
MCD431-20io2	2000	429	85	1020	10900	1.000	0.410	125	0.062	0.0200	W74	
MCD431-22io2	2200	429	85	1020	10900	1.000	0.410	125	0.062	0.0200	W74	
MCD431-24io2	2400	429	85	1020	10900	1.000	0.410	125	0.062	0.0200	W74	
MDC431-20io2	2000	429	85	1020	10900	1.000	0.410	125	0.062	0.0200	W74	
MDC431-22io2	2200	429	85	1020	10900	1.000	0.410	125	0.062	0.0200	W74	
MDC431-24io2	2400	429	85	1020	10900	1.000	0.410	125	0.062	0.0200	W74	
MCD500-18io1	1800	500	89	1294	16500	0.820	0.270	125	0.062	0.0200	W63	
MCD500-22io1	2200	500	80	1071	14000	0.880	0.460	125	0.062	0.0200	W63	
MDC500-18io1	1800	500	89	1294	16500	0.820	0.270	125	0.062	0.0200	W63	
MDC500-22io1	2200	500	80	1071	14000	0.880	0.460	125	0.062	0.0200	W63	
MCD501-12io2	1200	503	85	1195	14500	0.850	0.300	125	0.062	0.0200	W74	
MCD501-14io2	1400	503	85	1195	14500	0.850	0.300	125	0.062	0.0200	W74	
MCD501-16io2	1600	503	85	1195	14500	0.850	0.300	125	0.062	0.0200	W74	
MCD501-18io2	1800	503	85	1195	14500	0.850	0.300	125	0.062	0.0200	W74	
MDC501-12io2	1200	503	85	1195	14500	0.850	0.300	125	0.062	0.0200	W74	
MDC501-14io2	1400	503	85	1195	14500	0.850	0.300	125	0.062	0.0200	W74	
MDC501-16io2	1600	503	85	1195	14500	0.850	0.300	125	0.062	0.0200	W74	
MDC501-18io2	1800	503	85	1195	14500	0.850	0.300	125	0.062	0.0200	W74	
MCD550-12io1	1200	550	85	1318	18000	0.839	0.244	125	0.062	0.0200	W63	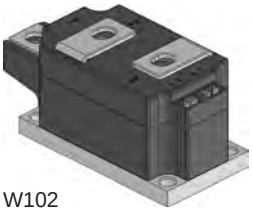 W102
MCD550-16io1	1600	550	85	1318	18000	0.839	0.244	125	0.062	0.0200	W63	
MDC550-12io1	1200	550	85	1318	18000	0.839	0.244	125	0.062	0.0200	W63	
MDC550-16io1	1600	550	85	1318	18000	0.839	0.244	125	0.062	0.0200	W63	

Thyristor / Diode Modules

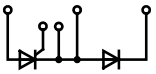
MCD...

MDC...

IXYS UK Westcode Ltd. has UL Certification for most modules (Underwriters Laboratories Inc). See the UL Listing.

Part No.	V_{RRM} V_{DRM}	I_{TAV}	@ T_C	I_{TRMS}	I_{TSM} 125°C 10 ms	V_{T0}	r_T	T_{VJM}	R_{thJC} per Die	R_{thCH} per Die	Fig. No.	Package style Outline drawings on page O-01...O-30
	V	A	°C	A	A	V	mΩ	°C	K/W	K/W		
MCD552-12io2	1200	550	85	1300	15800	0.770	0.259	125	0.062	0.0200	W74	
MCD552-14io2	1400	550	85	1300	15800	0.770	0.259	125	0.062	0.0200	W74	
MCD552-16io2	1600	550	85	1300	15800	0.770	0.259	125	0.062	0.0200	W74	
MDC552-12io2	1200	550	85	1300	15800	0.770	0.259	125	0.062	0.0200	W74	
MDC552-14io2	1400	550	85	1300	15800	0.770	0.259	125	0.062	0.0200	W74	
MDC552-16io2	1600	550	85	1300	15800	0.770	0.259	125	0.062	0.0200	W74	
MCD500-30io7	3000	500	85	1181	16200	1.079	0.422	125	0.05	0.0160	W88	
MCD500-36io7	3600	500	85	1181	16200	1.079	0.422	125	0.05	0.0160	W88	
MDC500-30io7	3000	500	85	1181	16200	1.079	0.422	125	0.05	0.0160	W88	
MDC500-36io7	3600	500	85	1181	16200	1.079	0.422	125	0.05	0.0160	W88	
MCD580-28io7	2800	581	85	1372	18900	0.926	0.313	125	0.05	0.0160	W88	
MDC580-28io7	2800	581	85	1372	18900	0.926	0.313	125	0.05	0.0160	W88	
MCD650-24io7	2400	646	85	1542	22100	0.874	0.227	125	0.05	0.0160	W88	
MDC650-24io7	2400	646	85	1542	22100	0.874	0.227	125	0.05	0.0160	W88	
MCD720-14io7	1400	719	85	1633	25200	0.823	0.241	125	0.05	0.0160	W88	
MCD720-18io7	1800	719	85	1633	25200	0.823	0.241	125	0.05	0.0160	W88	
MDC720-14io7	1400	719	85	1633	25200	0.823	0.241	125	0.05	0.0160	W88	
MDC720-18io7	1800	719	85	1633	25200	0.823	0.241	125	0.05	0.0160	W88	

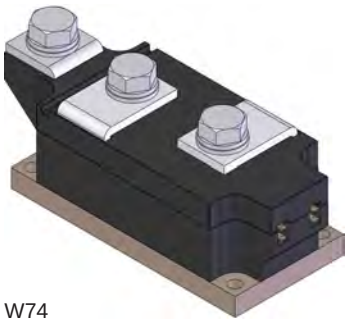
W74

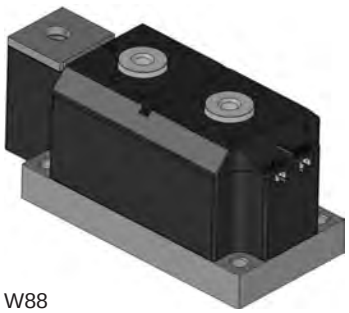
W88

Dual Diode Modules

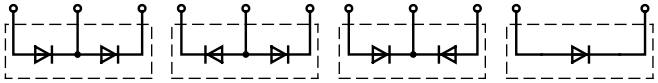

MDD... MDA... MDK... MDO...

IXYS UK Westcode Ltd. has UL Certification for most modules (Underwriters Laboratories Inc). See the UL Listing.

Part No.	V_{RRM}	I_{FAV}	@ T_C	I_{FRMS}	I_{FSM} 150°C 10 ms	V_{T0}	r_T	T_{VJM}	R_{thJC} per Die	R_{thCK} per Die	Fig. No.
	V	A	°C	A	A	V	mΩ	°C	K/W	K/W	
MDD275-30N3	3000	290	85	580	4500	0.900	1.570	150	0.1100	0.0400	W102
MDD275-36N3	3600	290	85	580	4500	0.900	1.570	150	0.1100	0.0400	W102
MDA275-30N3	3000	290	85	580	4500	0.900	1.570	150	0.1100	0.0400	W102
MDA275-36N3	3600	290	85	580	4500	0.900	1.570	150	0.1100	0.0400	W102
MDK275-30N3	3000	290	85	580	4500	0.900	1.570	150	0.1100	0.0400	W102
MDK275-36N3	3600	290	85	580	4500	0.900	1.570	150	0.1100	0.0400	W102
MDD410-24N3	2400	440	85	910	7800	0.850	0.450	150	0.1100	0.0400	W102
MDD410-28N3	2800	440	85	910	7800	0.850	0.450	150	0.1100	0.0400	W102
MDA410-24N3	2400	440	85	910	7800	0.850	0.450	150	0.1100	0.0400	W102
MDA410-28N3	2800	440	85	910	7800	0.850	0.450	150	0.1100	0.0400	W102
MDK410-24N3	2400	440	85	910	7800	0.850	0.450	150	0.1100	0.0400	W102
MDK410-28N3	2800	440	85	910	7800	0.850	0.450	150	0.1100	0.0400	W102
MDD510-14N3	1400	545	85	1135	10900	0.750	0.250	150	0.1100	0.0400	W102
MDD510-18N3	1800	545	85	1135	10900	0.750	0.250	150	0.1100	0.0400	W102
MDA510-14N3	1400	545	85	1135	10900	0.750	0.250	150	0.1100	0.0400	W102
MDA510-18N3	1800	545	85	1135	10900	0.750	0.250	150	0.1100	0.0400	W102
MDK510-14N3	1400	545	85	1135	10900	0.750	0.250	150	0.1100	0.0400	W102
MDK510-18N3	1800	545	85	1135	10900	0.750	0.250	150	0.1100	0.0400	W102
MDD600-14N1	1400	600	111	1818	21800	0.750	0.200	150	0.0620	0.0200	W63
MDD600-18N1	1800	600	111	1818	21800	0.750	0.200	150	0.0620	0.0200	W63
MDD600-22N1	2200	600	111	1818	21800	0.750	0.200	150	0.0620	0.0200	W63
MDA600-14N1	1400	600	111	1818	21800	0.750	0.200	150	0.0620	0.0200	W63
MDA600-18N1	1800	600	111	1818	21800	0.750	0.200	150	0.0620	0.0200	W63
MDA600-22N1	2200	600	111	1818	21800	0.750	0.200	150	0.0620	0.0200	W63
MDK600-14N1	1400	600	111	1818	21800	0.750	0.200	150	0.0620	0.0200	W63
MDK600-18N1	1800	600	111	1818	21800	0.750	0.200	150	0.0620	0.0200	W63
MDK600-22N1	2200	600	111	1818	21800	0.750	0.200	150	0.0620	0.0200	W63
MDD630-30N2	3000	630	85	1275	11700	0.800	0.500	150	0.0620	0.0200	W74
MDD630-36N2	3600	630	85	1275	11700	0.800	0.500	150	0.0620	0.0200	W74
MDA630-30N2	3000	630	85	1275	11700	0.800	0.500	150	0.0620	0.0200	W74
MDA630-36N2	3600	630	85	1275	11700	0.800	0.500	150	0.0620	0.0200	W74
MDK630-30N2	3000	630	85	1275	11700	0.800	0.500	150	0.0620	0.0200	W74
MDK630-36N2	3600	630	85	1275	11700	0.800	0.500	150	0.0620	0.0200	W74
MDD 710-22N2	2200	708	85	1440	12750	0.800	0.350	150	0.0620	0.0200	W74
MDD 710-26N2	2600	708	85	1440	12750	0.800	0.350	150	0.0620	0.0200	W74
MDA 710-22N2	2200	708	85	1440	12750	0.800	0.350	150	0.0620	0.0200	W74
MDA 710-26N2	2600	708	85	1440	12750	0.800	0.350	150	0.0620	0.0200	W74
MDK 710-22N2	2200	708	85	1440	12750	0.800	0.350	150	0.0620	0.0200	W74
MDK 710-26N2	2600	708	85	1440	12750	0.800	0.350	150	0.0620	0.0200	W74
MDD 810-12N2	1200	807	85	1661	17250	0.780	0.230	150	0.0620	0.0200	W74
MDD 810-16N2	1600	807	85	1661	17250	0.780	0.230	150	0.0620	0.0200	W74
MDD 810-18N2	1800	807	85	1661	17250	0.780	0.230	150	0.0620	0.0200	W74
MDA 810-12N2	1200	807	85	1661	17250	0.780	0.230	150	0.0620	0.0200	W74
MDA 810-16N2	1600	807	85	1661	17250	0.780	0.230	150	0.0620	0.0200	W74
MDA 810-18N2	1800	807	85	1661	17250	0.780	0.230	150	0.0620	0.0200	W74

Dual Diode Modules

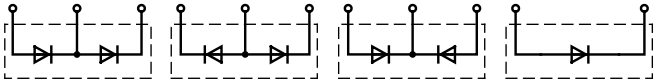

MDD... MDA... MDK... MDO...

IXYS UK Westcode Ltd. has UL Certification for most modules (Underwriters Laboratories Inc). See the UL Listing.

Part No.	V_{RRM}	I_{FAV}	@ T_C	I_{FRMS}	I_{FSM} 150°C 10 ms	V_{T0}	r_T	T_{VJM}	R_{thJC} per Die	R_{thCK} per Die	Fig. No.
	V	A	°C	A	A	V	mΩ	°C	K/W	K/W	
MDK 810-12N2	1200	807	85	1661	17250	0.780	0.230	150	0.0620	0.0200	W74
MDK 810-16N2	1600	807	85	1661	17250	0.780	0.230	150	0.0620	0.0200	W74
MDK 810-18N2	1800	807	85	1661	17250	0.780	0.230	150	0.0620	0.0200	W74
MDD1080-18N7	1800	1080	85	2235	29100	0.782	0.157	150	0.0500	0.0160	W88
MDD1080-24N7	2400	1080	85	2235	29100	0.782	0.157	150	0.0500	0.0160	W88
MDD1080-28N7	2800	1080	85	2235	29100	0.782	0.157	150	0.0500	0.0160	W88
MDA1080-18N7	1800	1080	85	2235	29100	0.782	0.157	150	0.0500	0.0160	W88
MDA1080-24N7	2400	1080	85	2235	29100	0.782	0.157	150	0.0500	0.0160	W88
MDA1080-28N7	2800	1080	85	2235	29100	0.782	0.157	150	0.0500	0.0160	W88
MDK1080-18N7	1800	1080	85	2235	29100	0.782	0.157	150	0.0500	0.0160	W88
MDK1080-24N7	2400	1080	85	2235	29100	0.782	0.157	150	0.0500	0.0160	W88
MDK1080-28N7	2800	1080	85	2235	29100	0.782	0.157	150	0.0500	0.0160	W88

Outlines on pages O-01...O-30

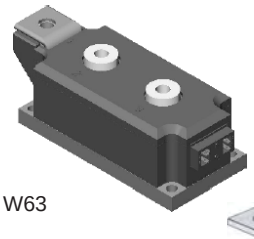

W63

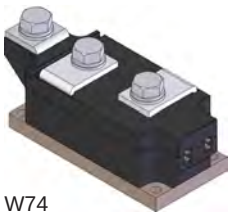

W74

W88

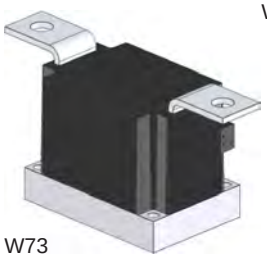

W73

W102

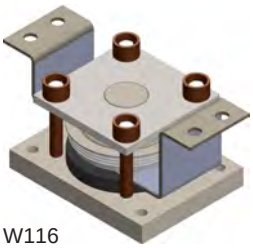

W116

Single Diode Modules

IXYS UK Westcode Ltd. has UL Certification for most modules (Underwriters Laboratories Inc).

Part No.	V_{RRM}	I_{FAV}	@ T_C	I_{FRMS}	I_{FSM} 150°C 10 ms	V_{T0}	r_T	T_{VJM}	R_{thJC} per Die	R_{thCK} per Die	Fig. No.
➢ New *	V	A	°C	A	A	V	mΩ	°C	K/W	K/W	
MDO1120-24N1	2400	1189	85	1869	32400	0.80	0.17	150	0.042	0.01	W73
MDO1120-28N1	2800	1189	85	1869	32400	0.80	0.17	150	0.042	0.01	W73
MDO1201-14N1	1400	1520	85	3665	36000	0.80	0.10	160	0.042	0.01	W73
MDO1201-18N1	1800	1520	85	3665	36000	0.80	0.10	160	0.042	0.01	W73
MDO1201-22N1	2200	1520	85	3665	36000	0.80	0.10	160	0.042	0.01	W73
➢ **W8570TJ180MBR**	1800	2830	85	6435	70200	0.69	0.05	175	0.0306	0.0035	W116
➢ **W8570TJ220MBR**	2200	2830	85	6435	70200	0.69	0.05	175	0.0306	0.0035	W116
➢ **W9830TJ120MBR**	1200	3345	85	7280	72000	0.67	0.043	190	0.0306	0.0035	W116
➢ **W9830TJ160MBR**	1600	3345	85	7280	72000	0.67	0.043	190	0.0306	0.0035	W116

* Consult factory for details

Water Cooled Dual Diode Modules

IXYS UK's range of water cooled modules feature a direct cooled base, with no extra interface to the die allowing for more efficient cooling giving an enhanced average current rating.

IXYS UK Westcode Ltd has UL Certification for most modules (Underwriters Laboratories Inc).
See the UL Listing.

Part No.	V_{RRM} V	I_{FAV} A	@ T_C °C	I_{FRMS} A	I_{FSM} 150°C 10ms A	V_{T0} V	r_T mΩ	T_{VJM} °C	R_{thJW} per Die K/W	Fig. No.	Package style Outline drawings on page O-01...O-30
MDD950-14N1W	1400	950	45	1773	21800	0.750	0.200	150	0.0900	W64	
MDD950-18N1W	1800	950	45	1773	21800	0.750	0.200	150	0.0900	W64	
MDD950-22N1W	2200	950	45	1773	21800	0.750	0.200	150	0.0900	W64	
MDA950-14N1W	1400	950	45	1773	21800	0.750	0.200	150	0.0900	W64	
MDA950-18N1W	1800	950	45	1773	21800	0.750	0.200	150	0.0900	W64	
MDA950-22N1W	2200	950	45	1773	21800	0.750	0.200	150	0.0900	W64	
MDK950-14N1W	1400	950	45	1773	21800	0.750	0.200	150	0.0900	W64	
MDK950-18N1W	1800	950	45	1773	21800	0.750	0.200	150	0.0900	W64	
MDK950-22N1W	2200	950	45	1773	21800	0.750	0.200	150	0.0900	W64	

W64

Water Cooled Thyristor/Diode Modules

Part No.	V_{RRM} V_{DRM} V	I_{TAV} A	@ T_C °C	I_{TRMS} A	I_{TSM} 125°C 10ms A	V_{T0} V	r_T mΩ	T_{VJM} °C	R_{thJW} per Die K/W	Fig. No.
MCD600-22io1W	2200	600	40	1116	16500	0.880	0.460	125	0.0900	W64
MDC600-22io1W	2200	600	40	1116	16500	0.880	0.460	125	0.0900	W64
MCD700-14io1W	1400	700	42	1331	16500	0.850	0.270	125	0.0900	W64
MCD700-18io1W	1800	700	42	1331	16500	0.850	0.270	125	0.0900	W64
MDC700-14io1W	1400	700	42	1331	16500	0.850	0.270	125	0.0900	W64
MDC700-18io1W	1800	700	42	1331	16500	0.850	0.270	125	0.0900	W64

Water Cooled Dual Thyristor Modules

Part No.	V_{RRM} V_{DRM} V	I_{TAV} A	@ T_C °C	I_{TRMS} A	I_{TSM} 125°C 10ms A	V_{T0} V	r_T mΩ	T_{VJM} °C	R_{thJW} per Die K/W	Fig. No.
MCA600-22io1W	2200	600	40	1116	16500	0.880	0.460	125	0.0900	W64
MCC600-22io1W	2200	600	40	1116	16500	0.880	0.460	125	0.0900	W64
MCK600-22io1W	2200	600	40	1116	16500	0.880	0.460	125	0.0900	W64
MCC700-14io1W	1400	700	42	1331	16500	0.850	0.270	125	0.0900	W64
MCC700-18io1W	1800	700	42	1331	16500	0.850	0.270	125	0.0900	W64
MCA700-14io1W	1400	700	42	1331	16500	0.850	0.270	125	0.0900	W64
MCA700-18io1W	1800	700	42	1331	16500	0.850	0.270	125	0.0900	W64
MCK700-14io1W	1400	700	42	1331	16500	0.850	0.270	125	0.0900	W64
MCK700-18io1W	1800	700	42	1331	16500	0.850	0.270	125	0.0900	W64

Power Semiconductor Assemblies From IXYS UK

Power Semiconductor Assemblies

With over 80 years of experience, our dedicated team of talented design engineers can deliver a wide variety of industry leading solutions ranging from simple standard sub-assemblies to complicated multi-megawatt power systems.

IXYS UK's power electronics assemblies group has been an integral part of our core business since the early 1920's when we began production of the first commercially available solid state rectifiers.

Our dedicated team of highly experienced specialists are on hand to provide our customers with first class support on everything from a simple air-cooled rectifier to a highly integrated custom power converter.

Using the latest 3D modelling and simulation techniques, we can significantly reduce the cycle time from concept to fully developed design, minimising risk and identifying opportunity for optimisation early in the project.

With double digit growth in the preceding 5 years, in 2010 we moved into a new 300m2 dedicated production facility complemented by a well-equipped power lab. These new facilities, supported by an expanded team of engineers and technicians form the foundations for continued investment and growth in this strategic area of our business.

Standard Assemblies

IXYS UK's standard assemblies also include the new press-pack IGBT 3-level inverters. 3 separate designs are available, a totally independent 3.3kV system, a 6.6kV system and a 10kV system. The 6.6kV and 10kV systems are based on the combination of 2 IGBT stacks and 1 diode stack. Each system benefits from direct water cooling to provide highly effective heat dissipation away from the devices and pre-loaded disc spring clamping to evenly distribute the applied force across the entire surface area of the device.
Also designed into each system is an integrated snubber circuit design and an isolated clamping rod system to limit the occurrence of eddy currents within the unit.

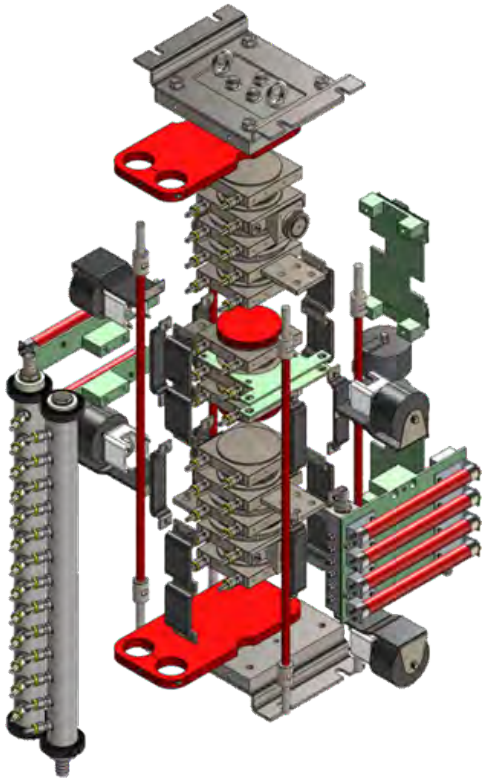

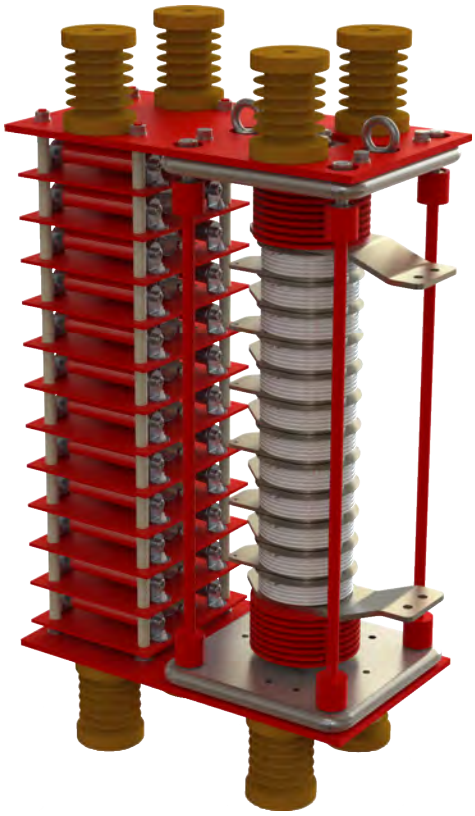

Pulsed Power

As a pioneer in the development of solid state pulsed power components and systems, we are able to deliver anything from discrete components to fully integrated energy transfer switches. With systems successfully delivering voltage ratings of over 50kV and pulsed currents up to 140kA, we have a wealth of experience at your disposal. Our modular design solutions based on either pulse thyristor or press-pack IGBT technology and integrating control and protection functions provide you with a flexible 'black-box' approach to energy transfer problems.

We are involved with pulsed power on a global basis, working with prestigious research organisations such as CERN, Switzerland as well as medium voltage manufacture for emerging commercial applications such as laser supplies, PUV and PEF sterilisation, magnetisation and metal forming.

Power Semiconductor Assemblies From IXYS UK

Traction Applications

With over 40 years of experience, our dedicate team of design engineers can deliver solutions to a whole range of design problems, ranging from simple trackside rectifiers to complex propulsion converters.

IXYS UK power electronic assemblies group pioneered the early development of solid state converters for traction systems in the late 1950's as part of the Westinghouse brake & signal company. Over the years we have gained an enviable reputation within the rail sector as a solution provider.

Using our experience and broad network of contacts within the industry, we are able to offer assistance in tackling issues such as; component obsolescence, improving power equipment reliability, contract maintenance of power modules, refurbishment of power electronics, upgrades to existing systems and, of course, subcontract manufacture for new projects.

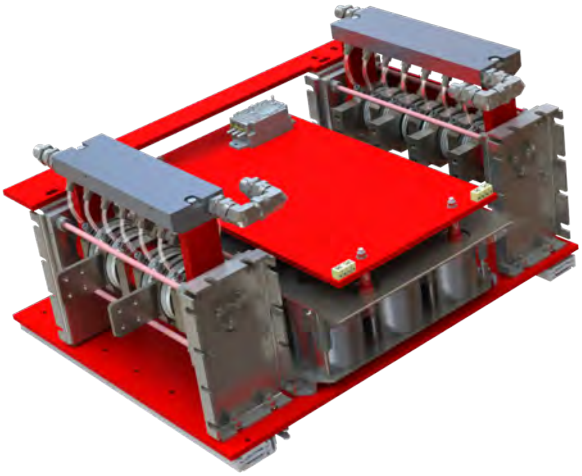

Working systematically to the highest international standards, we can give your equipment a new lease of life and help protect your investment in these valuable assets.

Component obsolescence is becoming a significant problem for the rail sector as equipment design life invariably exceeds that of the modern power electronics components. Our highly skilled team of engineers are able to re-engineer older equipment to incorporate the latest technology whilst maintaining compatibility.

As equipment reached half-life, many of the major power components will reach the end of their useful life resulting in a sharp decline in equipment reliability and availability. In these circumstances we can offer a full overhaul and refurbishment program for your power electronics, from engineering analysis, test and measurement through to delivery and validation of refurbished equipment.

For larger projects such as fleet wide refits, we are able to work within a consortium of specialist international companies to ensure you have the right skills on hand to deliver turnkey solutions to your requirements. This may include system analysis, project management, risk assessment and safety case.

Custom assemblies – our design philosophy

From concept through development and manufacture to after sales support, we believe strongly in working closely with our customer every step of the way – extending our philosophy of teamwork beyond our own organisation.

We understand that good communication and close collaboration help us provide the very best service to our customers.

Using the latest 3D modelling techniques we can visualise concepts and check form, fit and function with virtual prototypes. Also, utilising advanced software packages, IXYS UK can carry out simulation modelling, allowing us to model pressure drops through coolers/manifolds and heat flows through heatsinks.

Whether finding solutions to complex engineering problems or simply manufacturing to your designs, you will find IXYS UK offers outstanding value for money, excellent quality and first class customer service.

By working closely together from the very start of a project we aim to provide the best solutions on time and in budget.

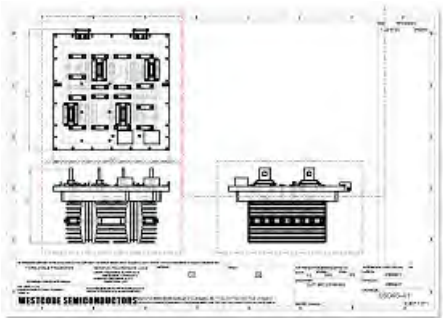

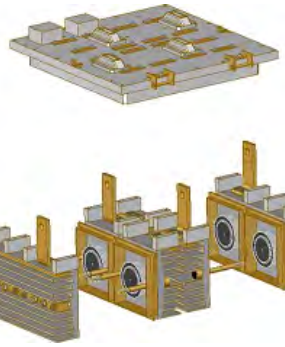

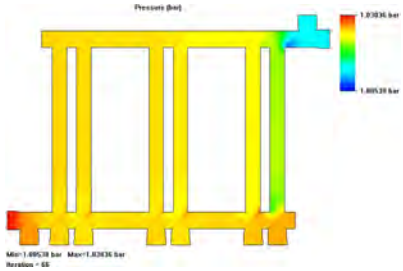

Power Semiconductor Assemblies From IXYS UK

Silicon Assemblies

A wide range of units is available, incorporating international standard outline silicon semiconductors. IXYS UK products have gained a worldwide reputation for quality in military, industrial and domestic applications.

Standard extruded aluminium heatsink profiles are used for mounting discrete semiconductor devices in various configurations, for example:

- Single-phase diode bridges with current ratings from 70 to 5710 Amps DC
- Single-phase half or fully controlled bridges from 35 to 2200 Amps DC
- Three-phase diode bridges with current ratings from 100 to 7190 Amps DC
- Three-phase half or fully controlled bridges from 45 to 3790 Amps DC
- Hexaphase single way diode assemblies from 200 to 14380 Amps DC
- Hexaphase single way thyristor assemblies from 90 to 7580 Amps DC
- AC regulators, single and three-phase from 40 to 2940 Amps RMS

Included in our standard range are solid-state, water-cooled AC regulators for resistance welding, with ratings from 315 to 3020 Amps RMS.

Also available are water cooled, single and three-phase assemblies from 1200 to 6000 Amps RMS.

All the above ranges are suitable for 440VRMS, 50Hz mains operation.

Beyond Semiconductors

Our flexible manufacturing facility is able to readily adapt to our customer's needs. In addition to power semiconductor assembly, we can offer complementary sub-assemblies to our customer's requirements, such as fuse panels and capacitor banks as well as contract manufacture to your designs.

Application and engineering support

Our highly experienced technical team is on hand to provide our customers with first class support for everything from the application of our range of discrete devices to the design and development of complex systems. We can help you from concept through design to manufacture and test, working closely with you every step of the way.

Components

To complement our range of power semiconductors and assemblies IXYS UK can offer a range of supporting components including:

- Heatsinks
- Coolers
- Mounting clamps
- Ultra-rapid semiconductor protection fuses
- Capacitors
  - Snubbers
  - Rectification
  - Specialist DC link
- Gate drive units

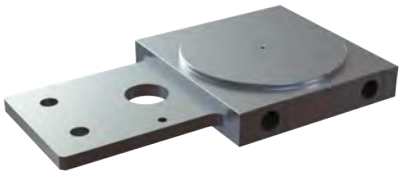

Westack - *Modular Solutions*

Single phase diode bridges — **Approx. total loss 2x I_{DC} @ 25°C**

Assembly Part Number	I_{DC} amps Air Forced 2.5m/s $T_a = 25°C$	$T_a = 35°C$	$T_a = 45°C$	I_{FSM} amps I_{TSM} amps	I^2t A^2s	Dimensions mm Fig.	W	H	D	Mass kg	Device Type and Quantity	Heat Sink Type
SXB1375B	1375	1303	1230	19500	1.9×10^6	1	382	325	405	20	W2058LC (4)	B(2x83.1x180)
SXB2096B	2096	1987	1874	33000	5.45×10^6	1	382	325	405	20	W3270NC (4)	B(2x83.1x180)
SXB3442B	3442	3277	3109	53000	13.5×10^6	2	382	593	405	40	W5696VC (4)	B(2x180)
SXB4264B	4264	4051	3835	72000	22.5×10^6	2	382	593	405	40	W8405ZC (4)	B(2x180)

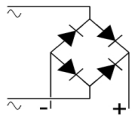

Three phase diode bridges — **Approx. total loss 2.5x I_{DC} @ 25°C**

Assembly Part Number	I_{DC} amps Air Forced 2.5m/s $T_a = 25°C$	$T_a = 35°C$	$T_a = 45°C$	I_{FSM} amps I_{TSM} amps	I^2t A^2s	Dimensions mm Fig.	W	H	D	Mass kg	Device Type and Quantity	Heat Sink Type
SXB1920G	1920	1822	1721	19500	1.9×10^6	3	548	325	405	30	W2058LC (6)	B(2x83.1x180)
SXB2939G	2939	2788	2634	33000	5.45×10^6	3	548	325	405	30	W3270NC (6)	B(2x83.1x180)
SXB4869G	4869	4640	4407	53000	13.5×10^6	4	548	593	405	60	W5696VC (6)	B(2x180)
SXB5993G	5993	5701	5402	72000	22.5×10^6	4	548	593	405	60	W8405ZC (6)	B(2x180)

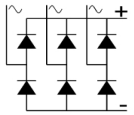

Six phase diode, single way with IPT — **Approx. total loss 1.25x I_{DC} @ 25°C**

Assembly Part Number	I_{DC} amps Air Forced 2.5m/s $T_a = 25°C$	$T_a = 35°C$	$T_a = 45°C$	I_{FSM} amps I_{TSM} amps	I^2t A^2s	Dimensions mm Fig.	W	H	D	Mass kg	Device Type and Quantity	Heat Sink Type
SXB3840HEX	3840	3644	3442	19500	1.9×10^6	5	548	325	395	30	W2058LC (6)	B(2x83.1x180)
SXB5877HEX	5877	5576	5268	33000	5.45×10^6	5	548	325	395	30	W3270NC (6)	B(2x83.1x180)
SXB9737HEX	9737	9281	8813	53000	13.5×10^6	6	548	593	395	60	W5696VC (6)	B(2x180)
SXB11987HEX	11987	11401	10804	72000	22.5×10^6	6	548	593	395	60	W8405ZC (6)	B(2x180)

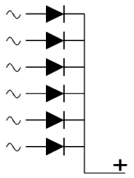

Six phase thyristor, single way with IPT — **Approx. total loss 1.5x I_{DC} @ 25°C**

Assembly Part Number	I_{DC} amps Air Forced 2.5m/s $T_a = 25°C$	$T_a = 35°C$	$T_a = 45°C$	I_{FSM} amps I_{TSM} amps	I^2t A^2s	Dimensions mm Fig.	W	H	D	Mass kg	Device Type and Quantity	Heat Sink Type
SXB3529HEXT	3529	3244	2949	29600	4.38×10^6	5	548	325	395	30	N1802LC (6)	B(2x83.1x180)
SXB4649HEXT	4649	4270	3878	37000	6.85×10^6	6	548	593	395	60	N2500VC (6)	B(2x180)
SXB6240HEXT	6240	5714	5173	64000	20.5×10^6	6	548	593	395	60	N4085ZC (6)	B(2x180)

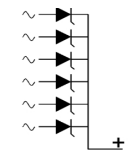

Single phase fully controlled bridges — **Approx. total loss 2.5x I_{DC} @ 25°C**

Assembly Part Number	I_{DC} amps Air Forced 2.5m/s $T_a = 25°C$	$T_a = 35°C$	$T_a = 45°C$	I_{FSM} amps I_{TSM} amps	I^2t A^2s	Dimensions mm Fig.	W	H	D	Mass kg	Device Type and Quantity	Heat Sink Type
SXB1265FB	1265	1161	1054	29600	4.38×10^6	1	382	325	405	20	N1802NC (4)	B(2x83.1x180)
SXB1645FB	1645	1508	1367	37000	6.85×10^6	2	382	593	405	40	N2500VC (4)	B(2x180)
SXB2167FB	2167	1981	1790	64000	20.5×10^6	2	382	593	405	40	N4085ZC (4)	B(2x180)

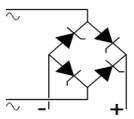

Three phase fully controlled bridges — **Approx. total loss 3x I_{DC} @ 25°C**

Assembly Part Number	I_{DC} amps Air Forced 2.5m/s $T_a = 25°C$	$T_a = 35°C$	$T_a = 45°C$	I_{FSM} amps I_{TSM} amps	I^2t A^2s	Dimensions mm Fig.	W	H	D	Mass kg	Device Type and Quantity	Heat Sink Type
SXB1764FG	1764	1622	1475	29600	4.38×10^6	3	548	325	405	30	N1802NC (6)	B(2x83.1x180)
SXB2324FG	2324	2135	1939	37000	6.85×10^6	4	548	593	405	60	N2500VC (6)	B(2x180)
SXB3120FG	3120	2857	2586	64000	20.5×10^6	4	548	593	405	60	N4085ZC (6)	B(2x180)

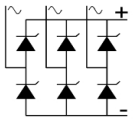

Westack - ***Modular Solutions***

Cooling for each module section is provided by the use of a low noise 115/230 V ac fan which is protected against overloading by an integral thermal cut-out.

Surge suppression and fusing provides reliable and safe operation. Surge suppression (protecting the devices from voltage transients) and high speed fuses (to protect against short circuit) are available. Contact IXYS UK for details.

All plastic components are UL recognised and meet the requirements of the European Union Directive 2002/95/EC covering the restricted use of certain hazardous substances in electrical and electronic equipment.

ISO 9000 provides the standard against which all our products and services are measured.

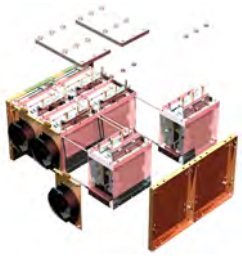

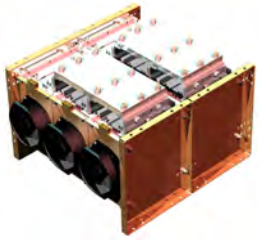

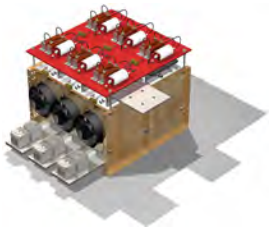

Westack - ***Modular Solutions are available in 6 standard configurations. others by request.***

Figure 1
Weight 20 kg

Figure 2
Weight 40 kg

Figure 3
Weight 20 kg

Figure 4
Weight 60 kg

Figure 5
Weight 30 kg

Figure 6
Weight 60 kg

Westack*LITE - Modular Solutions*

A simple but highly efficient range of stacks incorporating the new WESPACK range of phase control thyristors.

Currently available in 3 standard configurations:

AC voltage regulators

Single-phase bridges

Three-phase bridges

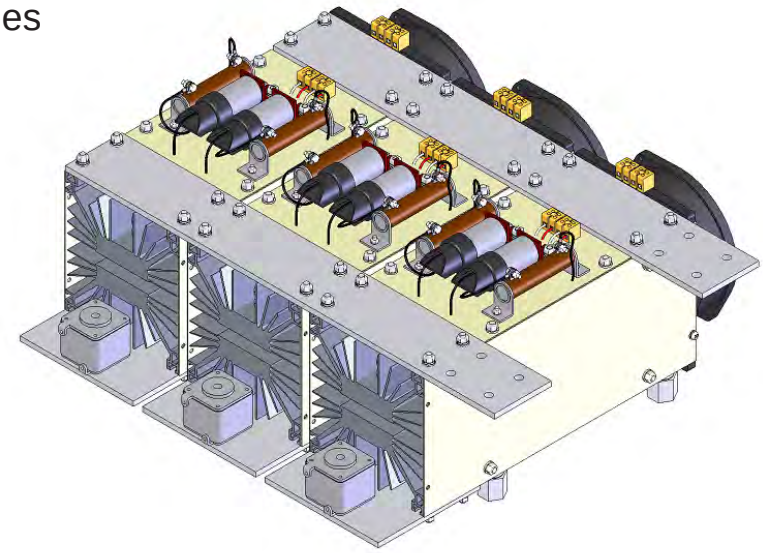

These stacks can easily be modified to meet individual customer requirements.

Fully dimensioned drawings are available upon request from the Chippenham Factory.

Features and Benefits

WESPACK devices provide the maximum power rating for weight and volume without compromising on quality and relaibilty.

Cooling is provided by means of a low noise dual voltage (230V/115V) ac fan that is protected against overloading by an integral thermal cut-out.

Surge suppression and fusing can be added to protect the devices from voltage transients and short circuits.

ISO 9000 2000 provides the standard against which all our products and services are measured.

Westack*LITE - Modular Solutions*

AC regulators — **Approx. total loss 1.3·I_{RMS}**

Assembly Part Number	I_{DC} amps Air Forced 5m/s $T_a = 25°C$	$T_a = 35°C$	$T_a = 45°C$	I_{FSM} amps I_{TSM} amps	I^2t A^2s	Dimensions mm Fig.	W	H	D	Mass kg	Device Type and Quantity	Heat Sink Type
SXC1195FR	1195	1098	997	19100	1.82×10^6	1	168	415	212	10	N1806QK (2)	(2x150. 1x330)
SXC1464FR	1464	1348	1227	32400	5.25×10^6	1	168	415	212	10	N2367MK (2)	(2x150. 1x330)
SXC1788FR	1788	1636	1480	50900	12.95×10^6	1	168	415	212	10	N3904HK (2)	(2x150. 1x330)

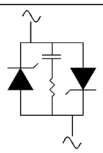

Single phase fully controlled bridges — **Approx. total loss 2.5·ID_{DC}**

Assembly Part Number	I_{DC} amps Air Forced 2.5m/s $T_a = 25°C$	$T_a = 35°C$	$T_a = 45°C$	I_{FSM} amps I_{TSM} amps	I^2t A^2s	Dimensions mm Fig.	W	H	D	Mass kg	Device Type and Quantity	Heat Sink Type
SXC1076FB	1076	988	897	19100	1.82×10^6	2	330	415	212	20	N1806QK (4)	(2x150. 1x330)
SXC1318FB	1318	1213	1104	32400	5.25×10^6	2	330	415	212	20	N2367MK (4)	(2x150. 1x330)
SXC1609FB	1609	1473	1332	50900	12.95×10^6	2	330	415	212	20	N3904HK (4)	(2x150. 1x330)

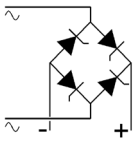

Three phase fully controlled bridges — **Approx. total loss 3·ID_{DC}**

Assembly Part Number	I_{DC} amps Air Forced 2.5m/s $T_a = 25°C$	$T_a = 35°C$	$T_a = 45°C$	I_{FSM} amps I_{TSM} amps	I^2t A^2s	Dimensions mm Fig.	W	H	D	Mass kg	Device Type and Quantity	Heat Sink Type
SXC1517FG	1517	1396	1270	19100	1.82×10^6	3	492	415	212	30	N1806QK (6)	(2x150. 1x330)
SXC1871FG	1871	1725	1573	32400	5.25×10^6	3	492	415	212	30	N2367MK (6)	(2x150. 1x330)
SXC2319FG	2319	2125	1926	50900	12.95×10^6	3	492	415	212	30	N3904HK (6)	(2x150. 1x330)

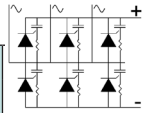

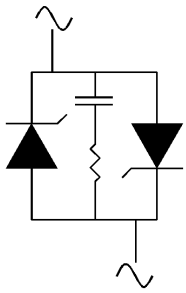

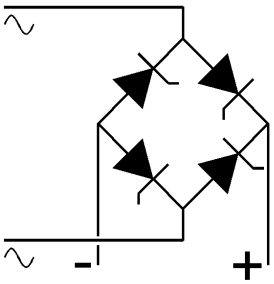

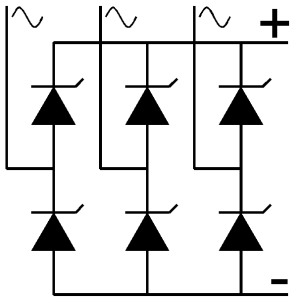

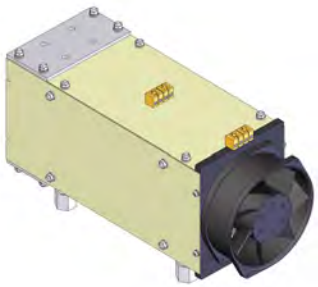

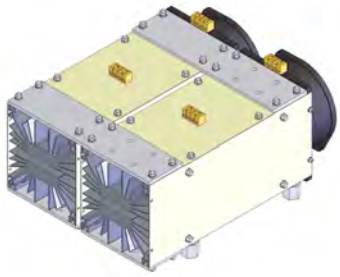

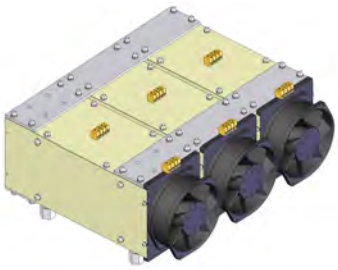

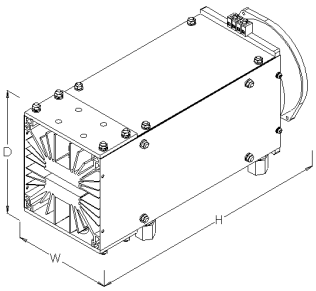

Figure 1
Weight 10 kg

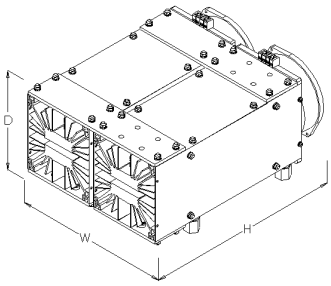

Figure 2
Weight 20 kg

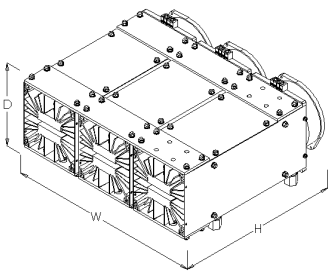

Figure 3
Weight 30 kg

Power Semiconductor Accessories

As part of our continuing commitment to meet our customers' demands, we offer a range of products to support our high power semiconductor devices and our silicon assembly business.

The following pages show a selection of accessories available to our customers, from heatsinks and coolers, to bar or box clamps, to mounting grease!

Part No.	Old Part Number	Accessory
XSGSCX13		Press Pack Semiconductor Mounting Grease, supplied in 1kg tins
XST1000M08P	PTFE1000M8	M8 PTFE tube x 1m length insulation
XST1000M10P	PTFE1000M10	M10 PTFE tube x 1m length insulation
XST1000M12P	PTFE1000M12	M12 PTFE tube x 1m length insulation
XST1000M16P	PTFE1000M16	M16 PTFE tube x 1m length insulation
L0001YC600XXX	n/a	30mm diameter poleface Insulator Capsule
L0001QC600XXX	n/a	38mm diameter poleface Insulator Capsule
L0001NC600XXX	n/a	47mm diameter poleface Insulator Capsule
L0001HC600XXX	n/a	66mm diameter poleface Insulator Capsule
L0001ZF600XXX	n/a	73mm diameter poleface Insulator Capsule
L0001TC600XXX	n/a	75mm diameter poleface Insulator Capsule

Part No.	Old Part Number	Accessory	Type
XSL200D8WRC	U9948	200mm long single Co-Axial cable, Red / White, M5 ring terminal for Ø75 IGBT & below	IGBT
XSL200D8WRCP	U9947	200mm long double Co-Axial cable, Red / White, M5 ring terminal for Ø85 IGBT & above	IGBT
XSL220C2WRT		220mm long twisted pair, Silicone sleeve cable 16/0.2, Red / White, M4 ring terminal	Thyristor
XSL300C2WRP	U9900	300mm long pair, Silicone sleeve cable 16/0.2, Red / White, M4 ring terminal	Thyristor
XSL300C2WS	U9900 (Gate Only)	300mm long gate wire, Silicone sleeve cable 16/0.2, White, M4 ring terminal	Thyristor
XSL350C2WRP	U9723	350mm long pair, Silicone sleeve cable 16/0.2, Red / White, M4 ring terminal	Thyristor
XSL400C2WRP	U9860	400mm long pair, Silicone sleeve cable 16/0.2, Red / White, M4 ring terminal	Thyristor
XSL500C2WRP	U9855	500mm long pair, Silicone sleeve cable 16/0.2, Red / White, M4 ring terminal	Thyristor
XSL600C2WRP	U9775	600mm long pair, Silicone sleeve cable 16/0.2, Red / White, M4 ring terminal	Thyristor
XSL1000C2WRP	U9734/U9801/U9849	1000mm long pair, Silicone sleeve cable 16/0.2, Red / White, M4 ring terminal	Thyristor
XSL1000C2WRT	U9952	1000mm long twisted pair, Silicone sleeve cable 16/0.2, Red / White, M4 ring terminal	Thyristor
XSL1100C2WRT	U9779	1100mm long twisted pair, Silicone sleeve cable 16/0.2, Red / White, M4 ring terminal	Thyristor

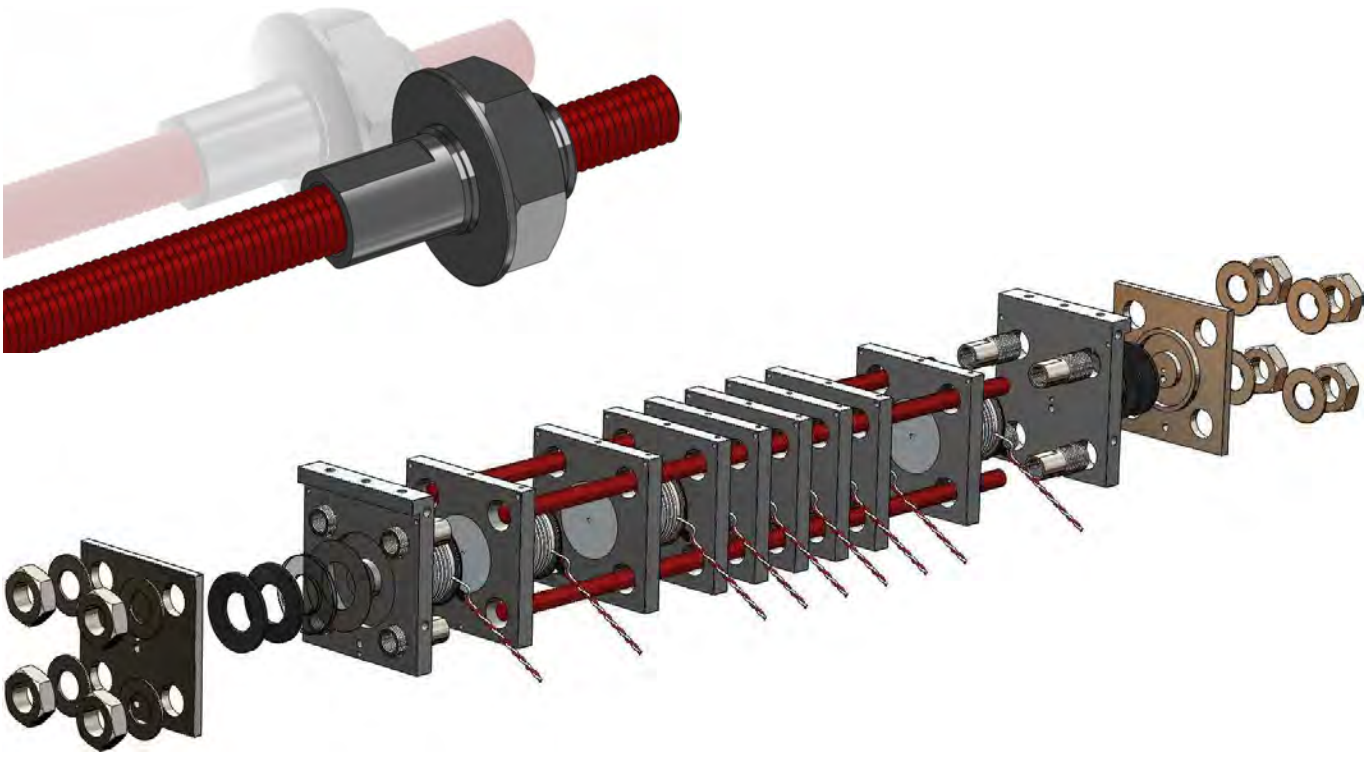

We can supply discrete parts. kits of parts or complete assemblies to satisfy your requirements.

Please contact the Chippenham Factory for further information.

Standard Bar Clamps

Type Part No.	Fixing Centres mm	Rod Size	Capsule Device Outline	Mounting Surface Diameter mm	Nominal Thickness mm	$T_{J\ Max.}$ °C	Outline No.
XK0450DA056M	65	M8	DO-200AA/TO-200AB	19.0	13.8	190	WC2
XK0450DT056M							WC3
XK0450SA056M							WC1
XK0550DA056M	65	M8	GTO	29.5	16.0	190	WC5
XK0550SA056M							WC4
XK0900DA056M *	65	M8	Diode/Thyristor	25.1	14.6	190	WC7
XK0900DT056M *							WC8
XK0900SA056M							WC6
XK0600DA074M	89	M10	Press-Pack IGBTs	47.0	27.0	190	WC10
XK0600SA074M							WC9
XK1000DA074M	89	M10	Press-Pack IGBTs	47.0	27.0	190	WC12
XK1000SA074M							WC11
XK1100DA076M	89	M10	DO-200AB/TO-200AC	34.0	26.2	190	WC13
XK1130DA076M	89	M10	DO-200AB/TO-200AC	34.0	26.2	190	WC15
XK1130DT076M						190	WC16
XK1130SA076M						190	WC14
XK1800DA076M	89	M10	Wespack PCT	38.0	14.0	190	WC18
XK1800DT076M							WC19
XK1800SA076M							WC17
XK2100DA076M	89	M10	GTO	47.0	27.0	190	WC21
XK2100DA076ML						125	
XK2100SA076M						190	WC20
XK2100SA076ML						125	
XK2140DA076M *	89	M10	DO-200/Thyristor	47.0	26.8	190	WC23
XK2140DA076ML *						125	
XK2140DT076M *						190	WC24
XK2140DT076ML *						125	
XK2140SA076M						190	WC22
XK2140SA076ML						125	
XK2700DA076M	89	M10	Wespack PCT	50.0	14.0	190	WC26
XK2700DT076M							WC27
XK2700SA076M							WC25
XK2000DA114M	132	M12	Press-Pack IGBTs	75.0	26.0	190	WC29
XK2000SA114M							WC28
XK2500DA114M	132	M12	Press-Pack IGBTs	75.0	26.0	190	WC31
XK2500SA114M							WC30
XK2500DA116M	132	M12	GTO	63.0	26.0	190	WC33
XK2500DA116ML						125	
XK2500SA116M						190	WC32
XK2500SA116ML						125	
XK3000DA116M *	132	M12	DO-200AD/Thyristor	63.0	33.0	190	WC35
XK3000DA116ML *						125	
XK3000SA116M						190	WC34
XK3000SA116ML						125	
XK3500DA116M	132	M12	GTO	75.0	26.0	190	WC37
XK3500DA116ML						125	
XK3500SA116M						190	WC36
XK3500SA116ML						125	

Standard Bar Clamps

Type Part No.	Fixing Centres mm	Rod Size	Capsule Device Outline	Mounting Surface Diameter mm	Nominal Thickness mm	$T_{J\ Max.}$	Outline No.
XK4000DA116M * **XK4000DA116ML *** **XK4000SA116M** **XK4000SA116ML**	132	M12	Diode/Thyristor	73.0	36.8	190 125 190 125	WC39 WC38
XK5000DA128M **XK5000DA128ML**	146	M16	GTO	75.0	26.0	190 125	WC40
XK7000DA128M **XK7000DA128ML**	146	M16	Diode/Thyristor	75.0	26.6	190 125	WC41
XK3060DA140ML **XK3060SA140ML**	154	M12	Press-Pack IGBTs	85.1	26.0	125	WC43 WC42
XK9000SA160M **XK9000SA160ML**	180	M16	Thyristor	99.3	35.8	190 125	WC44
XK9000DA160M **XK9000DA160ML**	180	M16	Thyristor	99.3	35.8	190 125	WC45
XK6120DA180ML **XK6120SA180ML**	196	M16	Press-Pack IGBTs	125.0	26.0	125	WC46 WC47
***** Not for new design. For new replacement part see page 162							

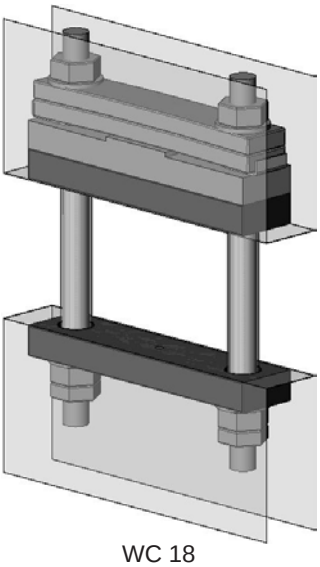

WC 18

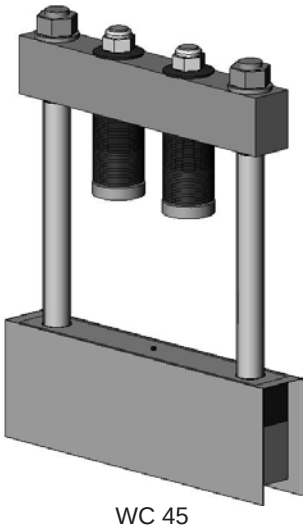

WC 45

WC 50

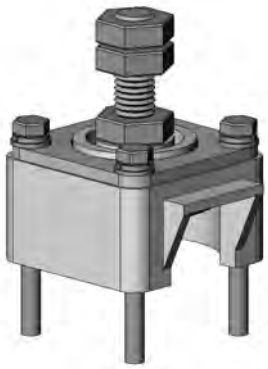

WC 48/49

Bar Clamps - new range!

Range	Part number	#### = Force kgf	Max cell dia mm	$T_{J\ MAX.}$ °C	xxx = max Z - dim range mm	Outline
XSK042	XSK####DA042Mxxx	0500/0900	42	190	025-076*	WC58
	XSK####DT042Mxxx	0500/0900	42	190	025-076*	WC59
	XSK####DF042Mxxx	0500/0900	42	190	025-076*	WC60
XSK054	XSK####DA054Mxxx	0900	54	190	025-076*	WC58
	XSK####DT054Mxxx	0900	54	190	025-076*	WC59
	XSK####DF054Mxxx	0900	54	190	025-076*	WC60
XSK056	XSK####DA056Mxxx	0500/0900/1500	56	190	038-120*	WC58
	XSK####DT056Mxxx	0500/0900/1500	56	190	038-120*	WC59
	XSK####DF056Mxxx	0500/0900/1500	56	190	038-120*	WC60
XSK065	XSK####DA065Mxxx	0500/0900/1500	65	190	038-120*	WC58
	XSK####DT065Mxxx	0500/0900/1500	65	190	038-120*	WC59
	XSK####DF065Mxxx	0500/0900/1500	65	190	038-120*	WC60
XSK075	XSK####DA075Mxxx	0900/1500/2200	75	190	038-120*	WC58
	XSK####DT075Mxxx	0900/1500/2200	75	190	038-120*	WC59
	XSK####DF075Mxxx	0900/1500/2200	75	190	038-120*	WC60
XSK087	XSK####DA087Mxxx	1500/2200/3000	87	190	038-120*	WC61
	XSK####DT087Mxxx	1500/2200/3000	87	190	038-120*	WC62
	XSK####DF087Mxxx	1500/2200/3000	87	190	038-120*	WC63
XSK103	XSK####DA103Mxxx	2200/3200/4000	103	190	038-120*	WC61
	XSK####DF103Mxxx	2200/3200/4000	103	190	038-120*	WC63
XSK112	XSK####DA112Mxxx	2800/3200/3800/4500	112	190	038-120*	WC61
	XSK####DF112Mxxx	2800/3200/3800/4500	112	190	038-120*	WC63
XSK120	XSK####DA120Mxxx	3800/4500/5000	120	190	050-120*	WC61
	XSK####DF120Mxxx	3800/4500/5000	120	190	050-120*	WC63
XSK126	XSK####DA126Mxxx	3800/4500/5000	126	190	050-120*	WC61
	XSK####DF126Mxxx	3800/4500/5000	126	190	050-120*	WC63

WC 58

WC 59

WC 60

WC 61

WC 62

WC 63

Outline drawings
on O-01...O-30

Range	A	A1	B	C	C1	D	E	F	G	H	Fixing
XSK042	69.85	74.89	54.00	15.88	21.04	42.00	8.64	PCF	PCF	12.70	M6
XSK054	82.55	86.04	65.00	15.88	21.04	54.00	8.62	34.93	PCF	12.70	M6
XSK056	95.25	-	70.00	25.40	-	56.00	12.19	PCF	PCF	9.53	M8
XSK065	104.39	-	79.00	25.40	-	65.00	12.19	PCF	PCF	12.70	M8
XSK075	112.78	-	89.00	25.40	-	75.00	12.19	PCF	PCF	12.70	M8
XSK087	127.00	-	102.00	25.40	-	87.00	12.19	PCF	PCF	19.05	M8
XSK103	144.78	154.11	118.00	25.40	36.00	103.00	PCF	PCF	PCF	19.05	M8
XSK112	165.02	-	132.00	25.40	36.00	112.00	16.56	PCF	PCF	25.40	M10
XSK120	172.72	-	140.00	25.40	36.00	120.00	16.56	PCF	PCF	25.40	M10
XSK126	181.10	-	146.00	25.40	36.00	126.00	16.56	PCF	PCF	25.40	M10

PCF = Dimension is dependent on clamp force and cell height. Please consult factory
All dimensions in mm

Bar Clamps Outline Drawings

WC58 DA

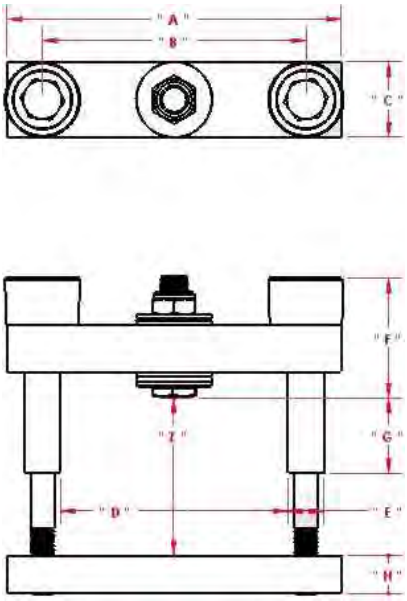

WC59 DT

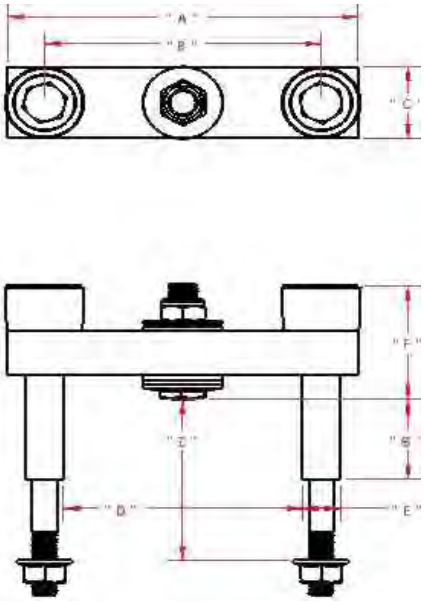

WC60 DF

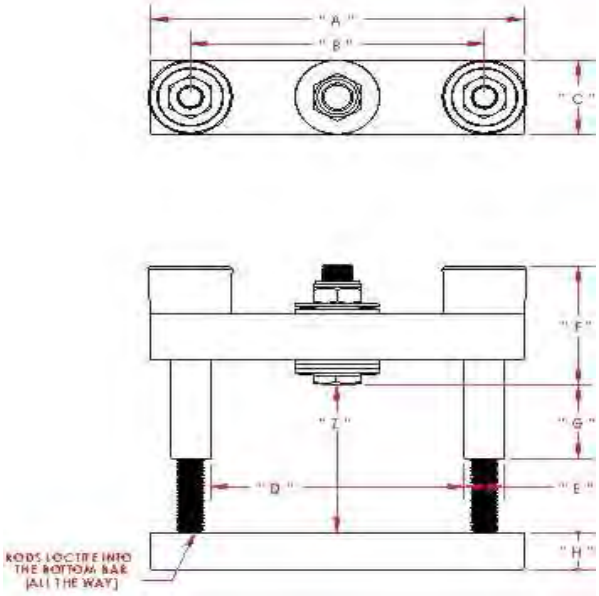

WC61 DA

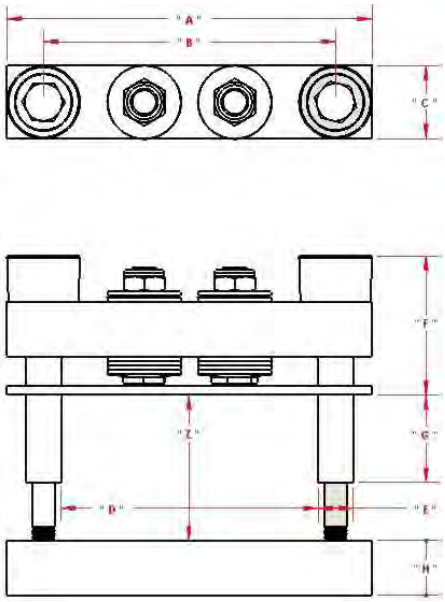

WC62 DT

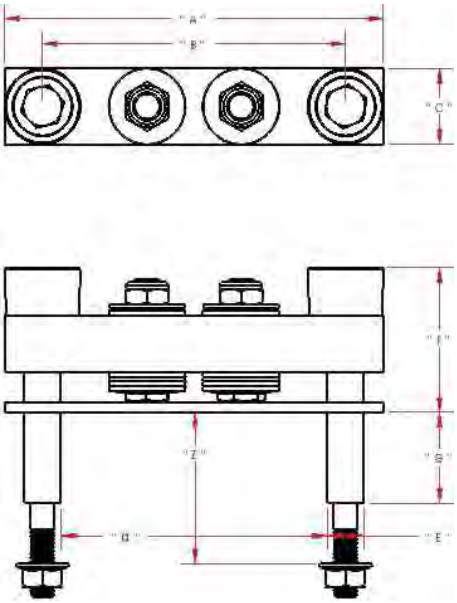

WC63 DF

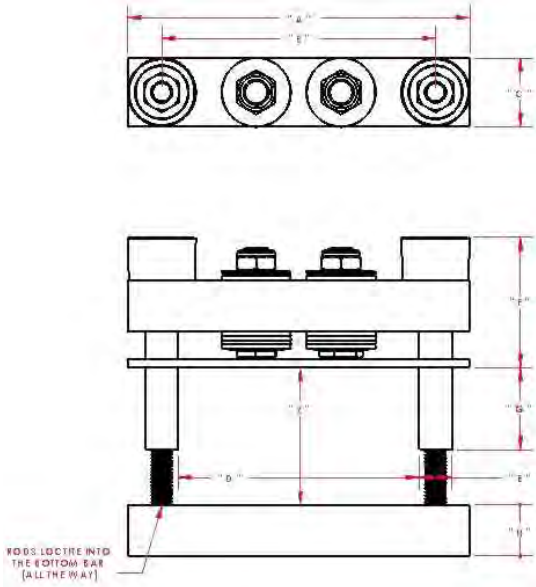

Bar Clamps for WESPACK™ *and GTO range*

Part No.	Rod Size & Length mm	Insulator Size & Length mm	Fixing centres	Pole Face	Clamp Forces	„Z“ mm	„D“ mm	Fig. No.
XSK1500DA076038	M8 x 90	M8 x 60	89	32	10kN to 20kN	38	27.5	WC51
XSK1500DA076076	M8 x 130	M8 x 95				76	62.5	
XSK1500DA076101	M8 x 160	M8 x 120				101	87.6	
XSK2000DA076038	M8 x 95	M8 x 60	89	38	13kN to 20kN	38	25.9	WC52
XSK2000DA076076	M8 x 130	M8 x 95				76	61.0	
XSK2000DA076101	M8 x 160	M8 x 120				101	85.9	
XSK3000DA076038	M8 x 100	M8 x 65	89	50	25kN to 31kN	38	26.2	WC53
XSK3000DA076076	M8 x 130	M8 x 100				76	56.1	
XSK3000DA076101	M8 x 160	M8 x 125				101	86.1	
XSK3400DA076038	M8 x 100	M8 x 65	89	50	27kN to 34kN	38	24.6	WC54
XSK3400DA076076	M8 x 140	M8 x 105				76	64.5	
XSK3400DA076101	M8 x 160	M8 x 130				101	89.7	
XSK3800DA116M076	M10 x 150	M12 x 100	132	66	32kN to 38kN	76	59.7	WC55
XSK3800DA116M101	M10 x 180	M12 x 125				101	84.6	
XSK4400DA116M076	M10 x 150	M12 x 105	132	68	36kN to 44kN	76	63.0	WC56
XSK4400DA116M101	M10 x 180	M12 x 130				101	87.9	
XSK6000DA116M076	M10 x 150	M12 x 105	132	75	50kN to 60kN	76	59.9	WC57
XSK6000DA116M101	M10 x 180	M12 x 130				101	84.8	

Note: 1 Kgf = 9.8 Newtons

T_{JMAX} = 190°C

Outline drawings are available from pages O-01...O-30

WC51

WC52

WC53

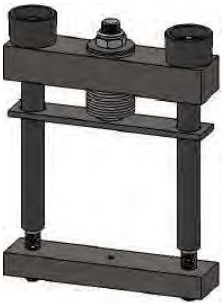

WC54

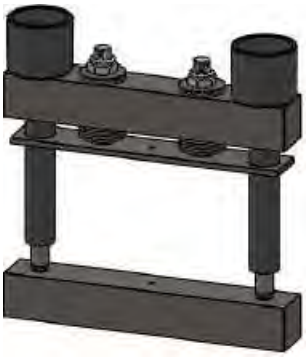

WC55

WC56

WC57

Box Clamps

Part No. ➢ New	Moulded Box Style	Fixing Centres mm	Rod Size	Capsule Device Outline	Mounting Surface Ø mm	Nominal Thickness mm	Outline Ref.
XK0450BA019M **XK0450BB019M**	Injection Compression	50 PCD	M5x50 Bolts	DO-200AA/TO-200AB	19.0	13.8	WC48
XK0450BA025M **XK0450BB025M**	Injection Compression	50 PCD	M5x50 Bolts	DO-200AA/TO-200AB	25.1	14.6	WC49
XK1000BA025M	Injection	50 PCD	M5x50 Bolts	DO-200AA/TO-200AB	25.1	14.0	WC49
XK1500BA034M	Injection	70 PCD	M6x50 Bolts	DO-200AB/TO-200AC	34.0	26.2	WC50

Note: 1 Kgf = 9.8 Newtons

Outline drawings are available from pages O-01...O-30

WC 48/49

WC 50

Heatsinks

Part No.	Weight Kg/m	Periphery mm	Area mm^2	Fig.
XSFGxxxxAN	8.1	1059	2979	WH1
XSFGAxxxxAN	15.6	1682	5867	WH2
XSFHxxxxAN	12.7	1684	4655	WH3
XSFTxxxxAN	20	2065	7573	WH4
XSFTBxxxxAN	29	2467	10905	WH5
XSFTCxxxxAN	28	2544	10561	WH6
XSFLPxxxxAN	30	6620	11172	WH7
XSF46xxxxAN	20	2822	7411	WH8
XSF30xxxxAN	Dimensions 125mm x 125mm x 4 vanes			WH9

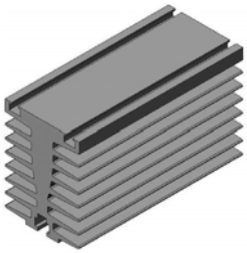

WH1

WH2

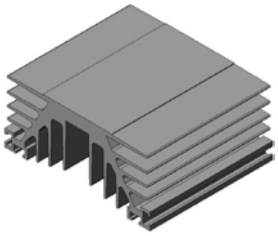

WH3

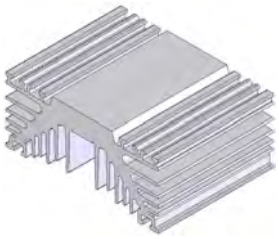

WH4

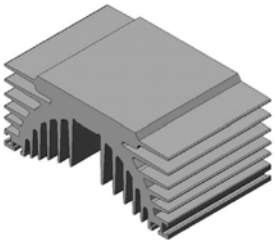

WH5

WH6

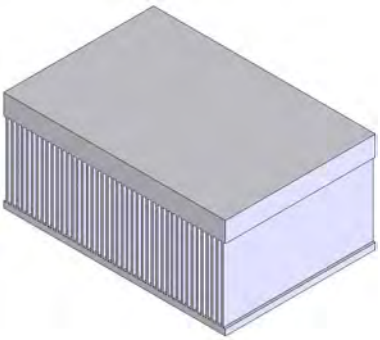

WH7

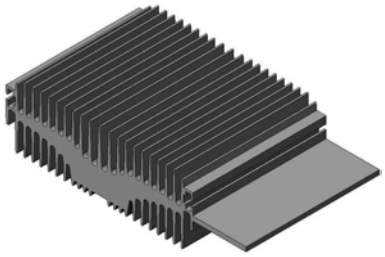

WH8

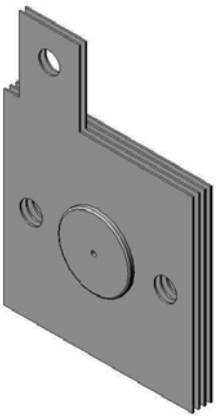

WH9

Coolers

Part No.	Weight Kg	Cooler Thickness mm	Busbar Thickness mm	Description	Fig. No.
XW076NC16A	0.418	16	N/A	47mm WC Cu	WCL2
XW076NC16B	0.612	16	6.4	47mm WC Cu with Busbar (10mm Hose)	WCL1
XW076NC16BS		16		47mm WC Cu with Busbar + spirol pins fitted (10mm Hose)	WCL1
XW076NC16BT		16		47mm WC Cu with Busbar + thermostat hole (10mm Hose)	WCL1
XW076NC16C		16		47mm WC Cu with Busbar (1/2" Hose)	WCL1
XW076NC16CT		16		47mm WC Cu with Busbar + thermostat hole (1/2" Hose)	WCL1
XW076NC16R	0.581	16	6.35	47mm WC Cu reversed with Busbar	WCL12
XW076NC16W	0.400	16	N/A	47mm WC Cu reversed	WCL13
XW116ZC20A	1.300	20	N/A	73mm WC Cu	WCL4
XW116ZC20B	1.750	20	10	73mm WC Cu with Busbar	WCL3
XW116ZC20C	2.120	20	10	73mm WC Cu with alt. Busbar	WCL5
XW116ZC20R	1.672	20	10	73mm WC Cu reversed with Busbar	WCL14
XW116ZC20W	1.119	20	N/A	73mm WC Cu reversed	WCL15
XW127EN15A	0.375	15	N/A	85mm WC Al Nitride	WCL8
XW127EN15B		15		85mm WC Al Nitride without holes	
XW127EC25A	1.650	25	N/A	85mm WC Cu Helix	WCL16
XW127EC25B	2.200	25	8	85mm WC Cu with Busbar Helix	WCL17
XW127EA25A	0.500	25	N/A	85mm WC Al Helix	WCL16
XW127EA25B	0.650	25	8	85mm WC Al with Busbar Helix	WCL17
XW160FC25A	3.620	25	N/A	100mm WC Cu	WCL6
XW160FC25B	4.520	25	10	100mm WC Cu with Busbar	WCL7
XW180GC34A	4.920	34	N/A	125mm WC Cu Helix	WCL11
XW180GC34B	5.950	34	10	125mm WC Cu with Busbar Helix	WCL10
XW180GA34A	1.500	34	N/A	125mm WC Al Helix	WCL11
XW180GA34B	1.800	34	10	125mm WC Al with Busbar Helix	WCL10
XW180GN25A	0.920	25	N/A	125mm WC Al Nitride Helix	WCL18
XW270QA25A	2.941	25	n/a	270 x 190mm WC Al Cold Plate	WCL9

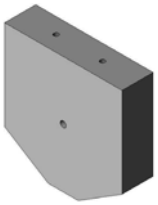
WCL2

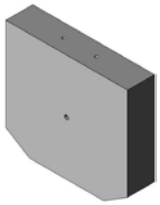
WCL4

WCL8

Outlines on pages O-01...O-30

WCL1

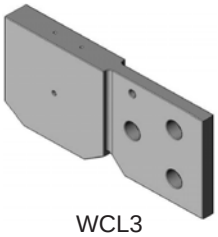
WCL3

WCL5

WCL6

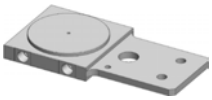
WCL7

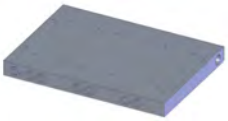
WCL9 -WS65

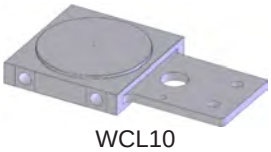
WCL10

WCL11

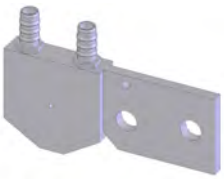
WCL12 -WS71-1

WCL13 -WS71-2

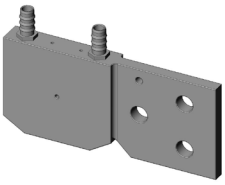
WCL14 -WS72-1

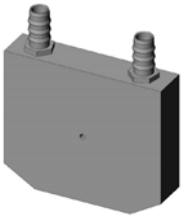
WCL15 -WS72-2

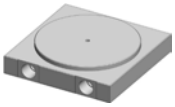
WCL16

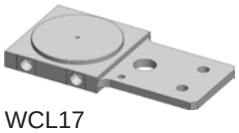
WCL17

WCL18

Part No.	Cooler Accessories
XSNM12H10S	M12 Cooler Connection, 10mm Hose & Stainless Steel material
XSNM12H12S	M12 Cooler Connection, 12mm Hose & Stainless Steel material
XSNM10H15P	M10 Cooler Connection, 15mm Hose & Plastic Material

Snubber Capacitors

These capacitors have a low series resistance,high pulse strength and low self-inductance of 15nH; they also have very good self-healing characteristics without loss of capacitance. These capacitors consist of a flame retardent plastic can filled with solid resin to ensure reliable operation even under the most extreme environmental conditions.

Part No.	Capacitance CN µF	Series Resistance ESR mΩ	RMS Current I_{RMS} A	Peak Current I_{PK} kA	Peak Surge Current I_S kA	DC Voltage V_{DC} V	AC Voltage V_{AC} V	Non-repetitive Surge voltage V_S V	Fig.	Diameter D1 mm	Length L1 mm
E53.H56-471T1W	0.47	2.90	20	0.70	2.10	3750	2100	5625	T1	55	56
E53.H56-102T1W	1.00	1.60	40	0.35	1.75	3200	1050	4800	T1	55	56
E53.H56-152T1W	1.50	2.40	32	0.27	1.35	2800	700	4200	T1	55	56
E53.H56-252T1W	2.50	1.80	40	0.37	1.10	2250	700	3375	T1	55	56
E53.M56-252T2W	2.50	0.65	75	0.90	4.50	3200	1050	4800	T2	75	56
E53.R11-302T21W	3.00	1.20	125	2.10	6.30	5000	2100	7500	T1	115	110
E53.H56-332T1W	3.30	1.60	40	0.42	1.20	2000	700	3000	T1	55	56
E53.M56-332T2W	3.30	1.10	60	0.60	3.00	2800	700	4200	T2	75	56
E53.P56-402T2W	4.00	0.50	80	1.50	7.50	3200	1050	4800	T2	95	56
E53.R11-402T2W	4.00	1.00	125	2.50	7.50	5000	2100	7500	T2	115	110
E53.H56-472T1W	4.70	1.10	45	0.50	1.60	1700	700	2550	T1	55	56
E53.Q56-502T2W	5.00	0.32	100	1.80	9.00	3200	1050	4800	T2	105	56
E53.M56-602T2W	6.00	0.75	70	0.88	2.60	2250	700	3375	T2	75	56
E53.Q56-602T2W	6.00	0.28	100	2.20	11.00	3200	1050	4800	T2	105	56
E53.P56-682T2W	6.80	0.55	80	1.20	6.00	2800	700	4200	T2	95	56
E53.R60-702T2W	7.00	0.25	100	3.00	12.00	3200	1050	4800	T2	115	60
E53.P56-752T2W	7.50	0.50	80	1.50	7.50	2800	700	4200	T2	95	56
E53.H56-802T1W	8.00	1.70	38	0.33	1.00	1400	350	2100	T1	55	56
E53.M56-802T2W	8.00	0.65	80	1.00	3.00	2000	700	3000	T2	75	56
E53.Q56-802T2W	8.00	0.45	100	1.50	7.50	2800	700	4200	T2	105	56
E53.M56-103T2W	10.00	0.52	80	1.10	3.50	1700	700	2550	T2	75	56
E53.P56-103T2W	10.00	0.46	80	1.50	4.50	2250	700	3375	T2	95	56
E53.Q56-103T2W	10.00	0.35	100	1.80	9.00	2800	700	4200	T2	105	56
E53.H56-123T1W	12.00	1.70	40	0.40	1.20	1100	350	1650	T1	55	56
E53.R60-123T2W	12.00	0.29	100	2.20	12.00	2800	700	4200	T2	115	60
E53.P56-143T2W	14.00	0.35	80	1.80	5.50	2000	700	3000	T2	95	56
E53.Q56-143T2W	14.00	0.33	100	2.00	6.00	2250	700	3375	T2	105	56
E53.H56-153T1W	15.00	1.10	40	0.50	1.50	1100	350	1650	T1	55	56
E53.Q56-153T2W	15.00	0.27	100	2.10	6.20	2250	700	3375	T2	105	56
E53.M56-163T2W	16.00	0.85	60	0.65	1.35	1400	350	2100	T2	75	56
E53.P56-163T2W	16.00	0.37	80	1.80	5.50	1700	700	2550	T2	95	56
E53.Q56-183T2W	18.00	0.26	100	2.30	6.90	2000	700	3000	T2	105	56
E53.R60-183T2W	18.00	0.25	100	2.60	10.00	2250	700	3375	T2	115	60
E53.Q56-223T2W	22.00	0.27	100	2.50	7.50	1700	700	2550	T2	105	56
E53.R60-243T2W	24.00	0.21	100	3.00	10.00	2000	700	3000	T2	115	60
E53.M56-253T2W	25.00	0.71	70	0.83	2.50	1100	350	1650	T2	75	56
E53.H56-303T1W	30.00	0.85	60	0.68	2.10	900	350	1350	T1	55	56
E53.N51-303H1W	30.00	1.30	60	1.30	3.90	1600	-	2400	H1	85	51
E53.P56-303T2W	30.00	0.46	80	1.20	3.70	1400	350	2100	T2	95	56
E53.H56-333T1W	33.00	0.95	55	0.68	2.10	700	350	1050	T1	55	56
E53.R60-333T2W	33.00	0.18	100	3.50	10.00	1700	700	2550	T2	115	60
E53.N51-383H1W	37.50	1.20	60	1.40	4.00	1400	-	2100	H1	85	51
E53.N68-403H1W	40.00	1.60	60	1.30	3.90	1600	-	2400	H1	85	68
E53.Q56-403T2W	40.00	0.34	100	1.70	5.10	1400	350	2100	T2	105	56
E53.H56-503T1W	50.00	0.80	60	0.83	2.50	550	280	825	T1	55	56
E53.N51-503H1W	50.00	1.10	70	1.60	4.80	1200	-	1800	H1	85	51
E53.N68-503H1W	50.00	1.50	60	1.40	4.20	1400	-	2100	H1	85	68
E53.P56-503T2W	50.00	0.34	80	1.70	5.00	1100	350	1650	T2	95	56
E53.R60-503T2W	50.00	0.27	100	2.20	10.00	1400	350	2100	T2	115	60

H1

T1/T2

NEW - DC Link Capacitors

The E50 PK16 capacitor can be universally used for the assembly of low inductance DC buffer circuits and DC filters; with its high energy density it can replace banks of series-connected electrolytic capacitors as well as large film capacitors in rectangular cases. The capacitance in a DC buffer circuit must be sufficiently sized to both handle and smoothen the occurring ripple currents. The traditional use of series/parallel-connected electrolytic capacitors offered large capacitance at seeming low cost, however the low cost per microfarad is countered by very low current strength, the high sensitivity to voltage and current surges, as well as high risk of field failures resulting in high maintenance cost. Advanced know-how in special capacitor film coating and many years of practical experience in designing and manufacturing capacitors have allowed the design of the E50 PK16 range with high current density. With fivefold the current strength of conventional electrolytic capacitors, it is not necessary to reproduce the same capacitance in film technology. Instead, the user now gets a superior technical solution within the same – or even less – space offering:

- Superior voltage and current strength
- Dramatic increase in operational life
- Drastic reduction of failures
- Minimisation of power dissipation losses
- Substantial reduction of self-inductance and series resistance
- More exact manufacturing tolerances
- Elimination of sharing resistors

Thanks to its compact cylindrical aluminium (NT) or plastic (N4) can design these capacitors are ideal for both electrical and mechanical requirements of high-speed IGBT converters. Its robust terminals and the robust fixing stud allow for very simple and reliable mounting that unites lowest inductance and highest current strength. The particularly large creepage and clearance distances make this design suitable for a wide range of operating voltages. As a result, existing standard converter concepts can easily be adapted to new applications without having to change the principal construction and to re-approve the entire system. The capacitors listed below have been designed specifically to match the requirements of IXYS UK's press-pack IGBT range in most inverter/converter applications.

Part No.	Voltage V_{DC} V	Capacitance µF	Series Resistance R_S Ω	Maximum Current I_{MAX} A	Inductance L_E nH	Diameter mm	Length mm	Design
E50.N15-254N5W	1300	250	4.2	60	40	85	155	N5
E50.N15-304NTW	1300	300	3.7	60	40	85	155	NT
E50.R16-554NTW	1300	545	2.3	80	40	116	165	NT
E50.N25-564NTW	1300	560	2.3	60	60	85	252	NT
E50.R23-824NTW	1300	820	1.7	100	50	116	230	NT
E50.R29-115NTW	1300	1090	1.4	100	60	116	295	NT
E50.R34-145NTW	1300	1370	1.1	100	70	116	345	NT
E50.S29-165NTW	1300	1560	1.1	120	70	136	295	NT
E50.S34-205NTW	1300	1950	0.69	120	70	136	345	NT
E50.N15-603NTW	2800	60	1.3	50	40	85	155	NT
E50.N23-104NTW	2800	100	1.7	60	60	85	232	NT
E50.R16-114NTW	2800	110	0.66	80	40	116	165	NT
E50.R23-174NTW	2800	165	0.63	100	50	116	230	NT
E50.R29-224NTW	2800	220	0.62	100	60	116	295	NT
E50.R34-284NTW	2800	275	0.85	100	70	116	345	NT
E50.S29-314NTW	2800	310	0.61	120	70	136	295	NT
E50.S34-394NTW	2800	390	0.76	120	70	136	345	NT
E50.N15-293NTW	3600	29	1.4	50	40	85	155	NT
E50.N23-503NTW	3600	50	1.9	60	60	85	232	NT
E50.R16-573NTW	3600	57	0.67	80	40	116	165	NT
E50.R23-863NTW	3600	85.5	0.65	100	50	116	230	NT
E50.R29-114NTW	3600	114	0.68	100	60	116	295	NT
E50.R34-144NTW	3600	142	0.88	100	70	116	345	NT
E50.S29-164NTW	3600	160	0.63	120	70	136	295	NT

Other voltage/capacitor ratings are available on request. Please contact IXYS UK for more information

N5

NT85

NT116/136

Power Semiconductor Chips

IXYS offers a wide range of power semiconductor dies for a multitude of applications.

Bipolar Chips	V_{RRM} / V_{DRM} V	$I_{F(AV)M}$ / $I_{T(AV)M}$ A	t_{rr} ns
Schottky Diodes	8 - 200	5 - 300	-
HiPerFRED™ (Low Leakage)	200 - 1200	10 - 150	30 - 40
Sonic™ Fast Recovery Diodes	600 - 1800	5 - 150	30 - 60
FRED™ (Low Forward Voltage Drop)	200 - 1200	10 - 150	40 - 60
Semi-Fast Diodes	1200 - 1600	15 - 60	60 - 100
Rectifier Diodes	1200 - 2200	10 - 400	-
Phase Control Thyristors	800 - 2200	5 - 300	-
IGBT Chips	V_{CES} V	I_C A	**Speed**
XPT IGBT	650	6 - 300	medium / fast
XPT IGBT	900	20 - 300	fast
XPT IGBT	1200	3 - 200	medium
XPT IGBT	1700	75 - 200	medium
HV XPT IGBT	3300 / 4500	40 - 60	medium

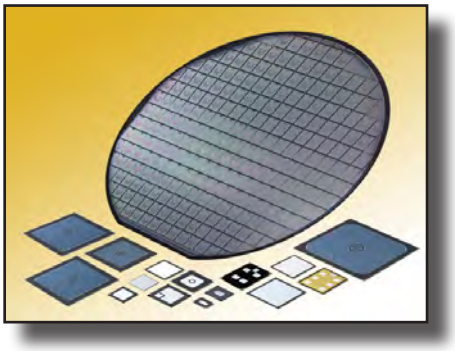

Mode of Shipment:
- in wafer form, unsawn, electrically tested, rejects are inked
- sawn wafer on foil, electrically tested, rejects are inked
- known good die in tray (Waffle Pack)
- customized die sizes / geometry on request

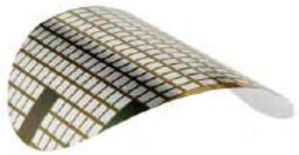

XPT Features:
- thin wafer technology
- low $V_{ce(sat)}$ and E_{off}
- very low gate charge
- rugged, square RBSOA @ 2 x I_{nom}
- short circuit rated (10µs)
- easy to parallel

For chip sales please contact:
chipsales@ixys.de

Direct Copper Bonded Ceramic Substrates

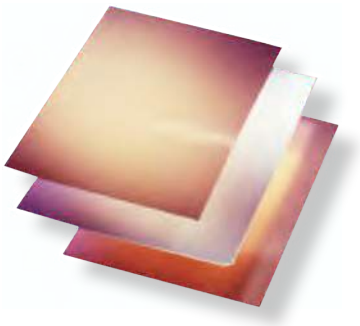

DCB Ceramic Substrates (Al_2O_3)

IXYS manufactures Direct Copper Bonded substrates on aluminum oxide (Al_2O_3) base. DCB ceramic substrates form the basis for new product ideas and electronic developments with a high degree of integration.
- carriers for semiconductor chips and connection clips
- circuits similar to that on a PC board
- electrical isolator for separating „current paths“ from „heat paths“
- transfer medium for heat dissipation from active parts into heat sink

Standard bonded DCB panel dimensions are:

Unclad aluminum oxide ceramic			
Al_2O_3 content		> 96	%
dimensions		138x210, 138x190.5, 115x165*	mm
usable area	max.	130x200, 130x180, 107x156*	mm
thickness		1.00, 0.63, 0.38, 0.25	mm
arc through voltage		10	kV
thermal conductivity		> 24	W/m · K
Conduction layers - both sides			
copper thickness		0.3 (< 0.3 on request)	mm
conductor width	min.	0.3 + / - 0.2	mm
conductor spacing	min.	0.4 + / - 0.2	mm
spacing conductor/edge of ceramic	min.	0.35 + / - 0.2	mm
surface finishes available		bare copper; nickel plated; nickel + gold plated	
peel-off resistance (90° peel test)		>6	N/mm
DCB ceramic substrate			
application temperature range		-55...+850	°C
resistant to hydrogen	max.	400	°C
thermal expansion coefficient	to typ.	7.4 x 10-6	K^{-1}

DCB parts are available as:
- bonded plate
- bonded and patterned plate
- prelasered, unbroken plate
- individuale substrates
- customer specific substrates on request

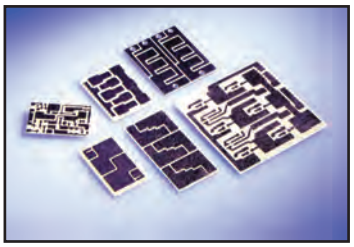

* = (for 0.25 mm thk.)

Application Notes Highlights

further information and downloads see www.ixys.com

Power Factor Correction	
IXAN0001	3-Phase PFC using Vienna Rectifier Approach and Modular Construction for Improved Overall Performance, Efficiency and Reliability
IXAN0002	Single and Three-Phase Rectifiers with Active Power Factor Correction for Enhanced Mains Power Quality
IXAN0003	Rectifiers with Power Factor Correction
IXAN0004	Design and Experimental Investigation of a Three-Phase, High Power Density, High Efficiency, Unity Power Factor PWM (VIENNA) Rectifier Employing a Novel Integrated Power Semiconductor Module
IXAN0005	Status of the Techniques of Three-Phase Rectifier Systems with Low Effects on the Mains
MOSFETs and IGBTs Drivers	
IXAN0012	MOSFET/IGBT Drivers - Theory and Applications
IXAN0011	Driving Your MOSFETs Wild to Obtain Greater Efficiencies, Power Densities and Lower Overall Cost
BiMOSFETs Applications	
IXAN0013	Capacitor Charge/Discharge Circuits, utilizing High Voltage IGBTs and ZCS Resonant Mode Techniques
IXAN0014	Comparative Performance of BiMOSFETs in Fly-back Converter Circuits
IXAN0015	Use of BiMOSFETs in Modern Radar Transmitters
IXAN0016	IXBH40N160 BiMOSFET Developed for High Voltage and High Frequency Applications
IXAN0017	New 1600V BiMOSFET Transistors Open Up New Applications
Automotive Applications	
IXAN0018	A High Current Dual Inline Packaged Trench MOSFET Three Phase Full Bridge as Contribution to Automotive System Integration
IXAN0019	High Power TrenchMOSFETs Solutions in Automotive Designs
IXAN0020	Power Electronic Supply for Automotive Starter Generator
IXAN0021	New Trench Power MOSFETs in Isolated Packages
Isolation Techniques, Mounting, Soldering and Cooling	
IXAN0071	The SMPD Package and its Mounting Instructions
IXAN0022	Capitalizing on the Advantages of ISOPLUS Products
IXAN0023	General Mounting Instructions
IXAN0025	ISOPLUS-The Revolution in Discrete Isolation Technique
IXAN0026	Combining the Features of Modules and Discretes in a New Power Semiconductor Packages
IXAN0028	The Revolution in Discrete Isolation Technique
IXAN0030	Surface Mount Soldering Recommendations for TO-263 and TO-268 case styles
IXAN0031	New ISOPLU247 Power Package Features 2500V Internal Isolation Revolutionary Approach Improves Thermal Conductance and Reliability
Power Modules	
IXAN0034	Recommended Use of the Integrated NTC Thermistor Temperature Sensor in IXYS Power Modules
IXAN0035	Mounting Instructions for _A7, _E7, _A8 and _E8 Module Series
IXAN0036	Investigations on Electromagnetic Compatibility of Power Semiconductor Modules Integrated in a Module
IXAN0037	Power Cycle Capability of solder contact DCB-Modules
FREDs and Schottky Diodes	
IXAN0042	Is the Lowest Forward Voltage Drop Schottky Diode Always the Best Choice?
IXAN0043	Input Rectifiers with Semifast Diodes for DC link.
IXAN0044	Characteristics and Applications of Fast Recovery Epitaxial Diodes.
IXAN0060	Optimized Ultra Fast Diodes for Switching Applications
Power MOSFETs	
IXAN0057	Series Operation of MOSFET and IGBT Switches
IXAN0061	Power MOSFET Basics
IXAN0062	IXYS Power MOSFET Products
IXAN0063	Application note on Depletion-mode
IXAN0064	IXYS P-Channel MOSFET
IXAN0065	IXYS Power MOSFET Datasheet Parameters Definition
IXAN0068	Linear Power MOSFETS Basic and Application
IXAN0069	Synchronous DC to DC Converter Design
IGBTs	
IXAN0063	IGBTs
IXAN0070	Drive with the IXYS XPT IGBT
IXAN0072	Discrete 600V GenX3 XPT IGBTs

Outline drawings

Dimensions in mm and inches (1 mm = 0.0394“)

W1 - 100A241

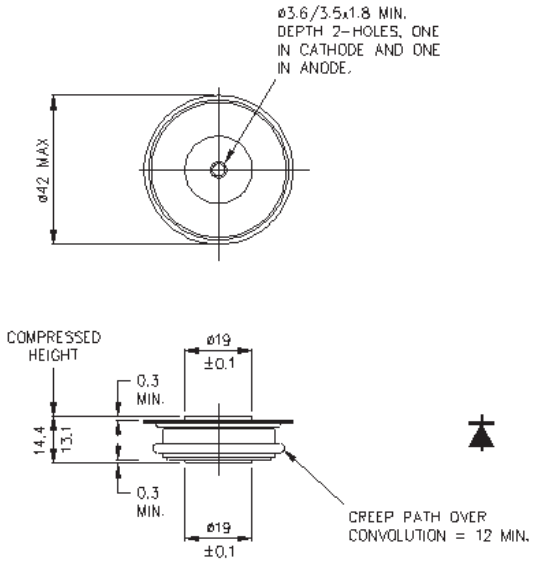

W2 - 100A291

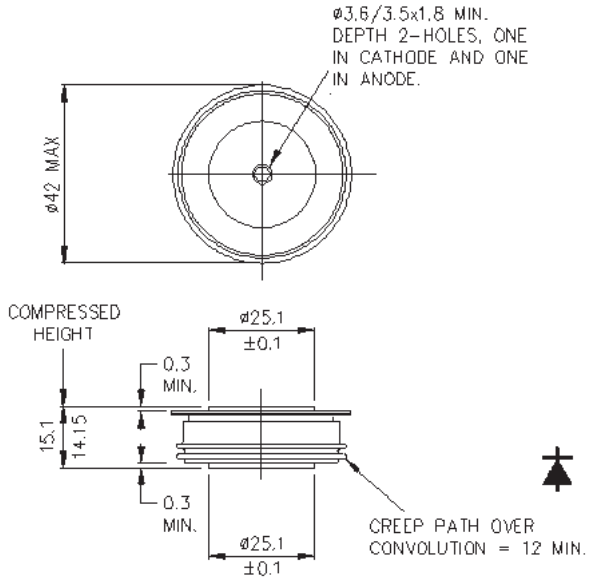

W3 - 100A317

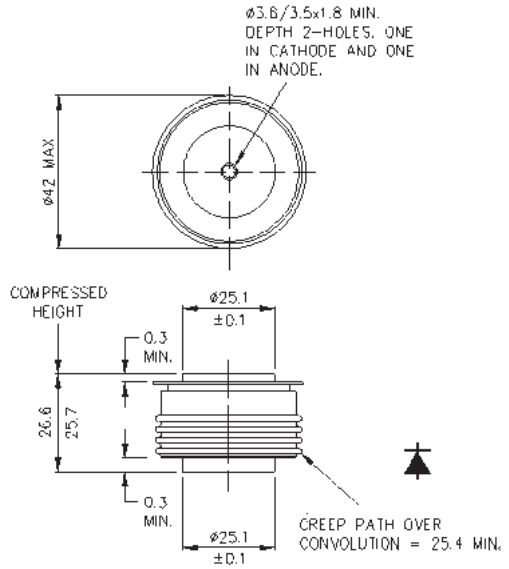

W4 - 100A243

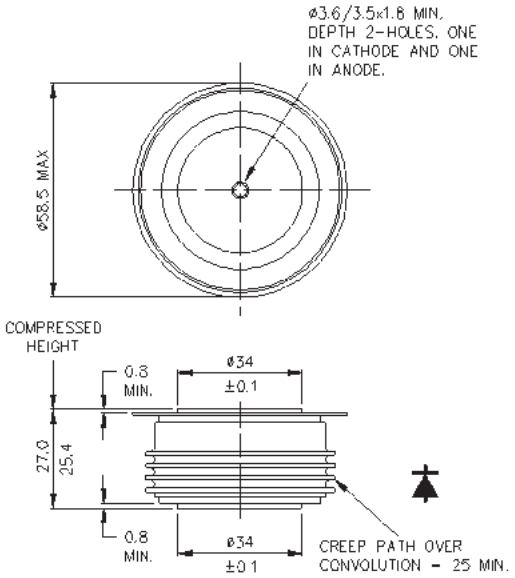

W5 - 100A249

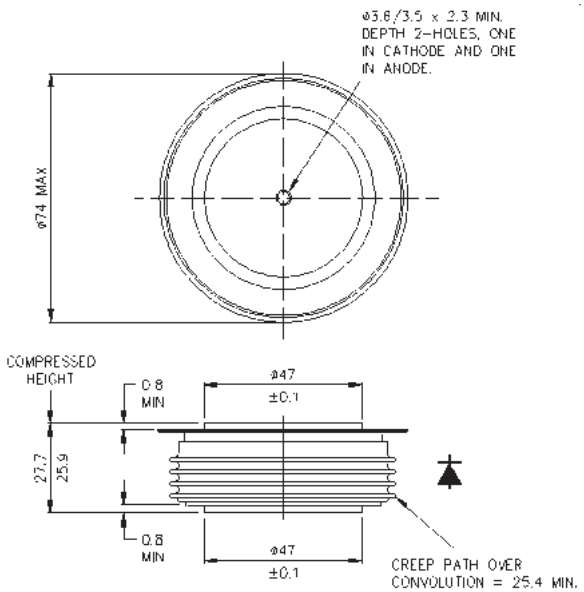

W6 - 100A270

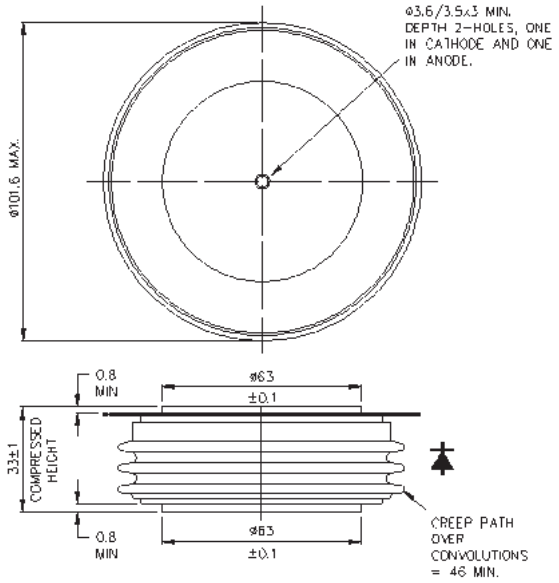

Outline drawings

Dimensions in mm and inches (1 mm = 0.0394“)

W7 - 100A293

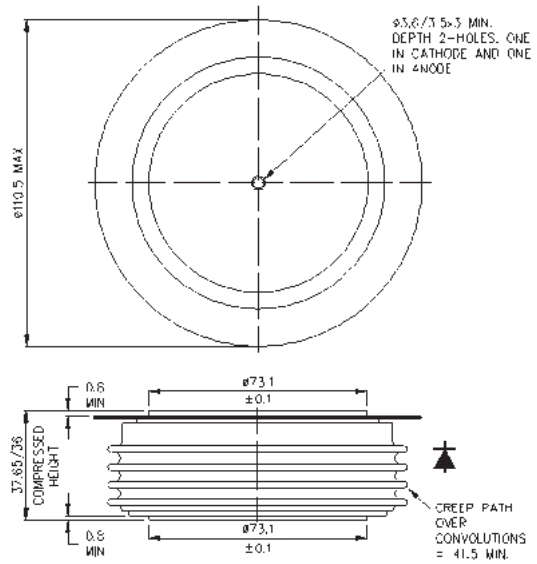

W10 - 101A216

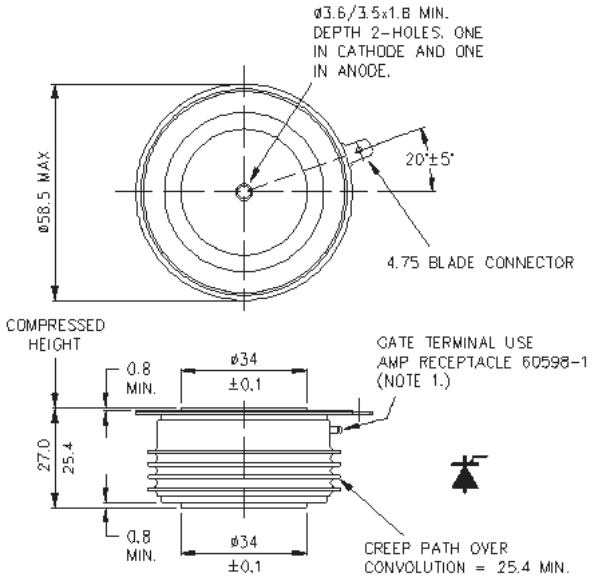

W11 - 101A223

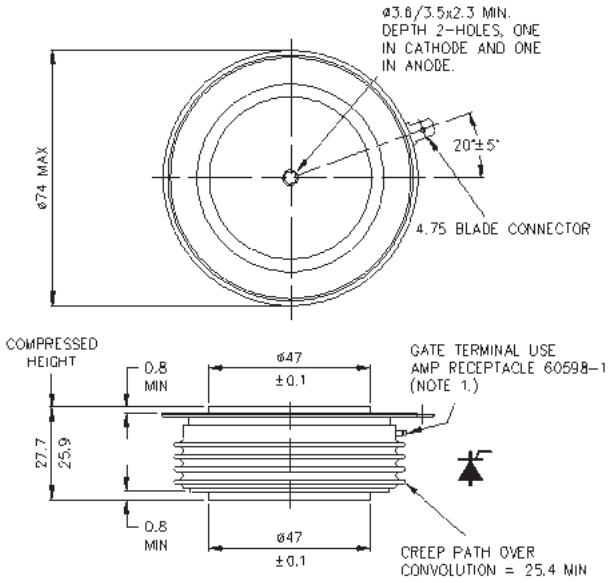

W12 - 101A232

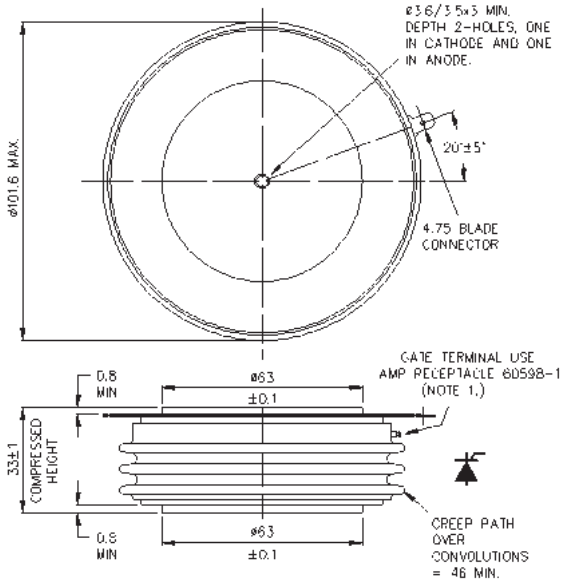

W13 - 101A281

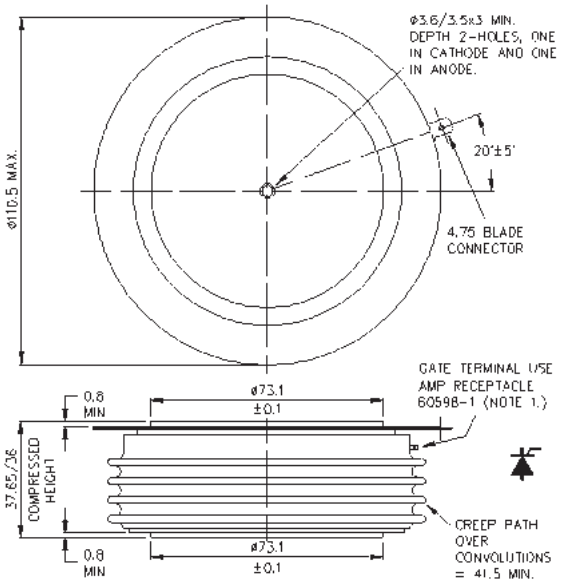

W14 - 101A325

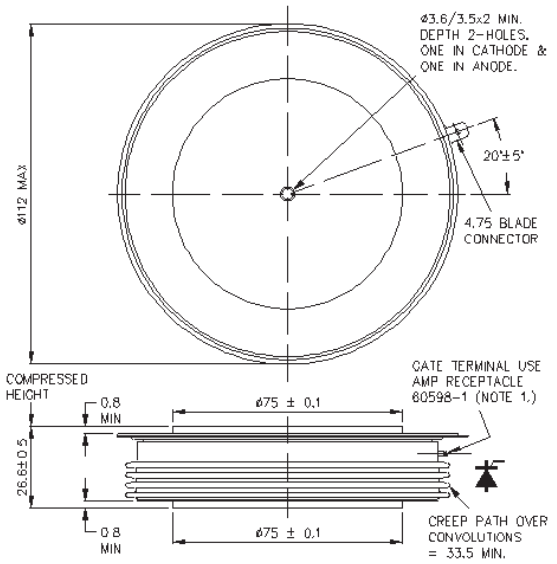

Outline drawings

Dimensions in mm and inches (1 mm = 0.0394“)

W15 - 101A322

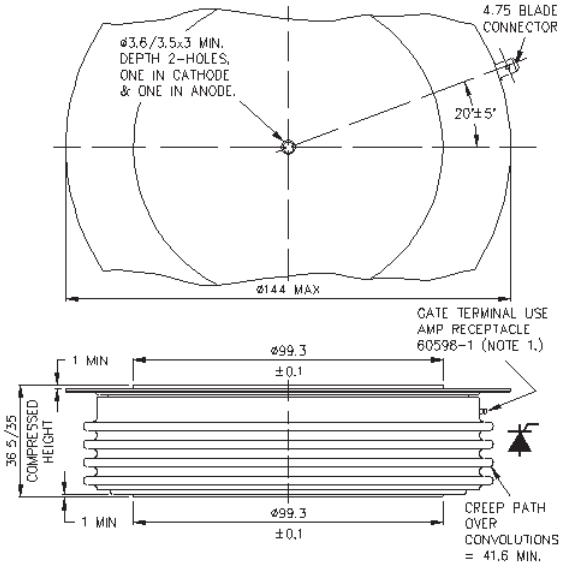

W16 - 101A235

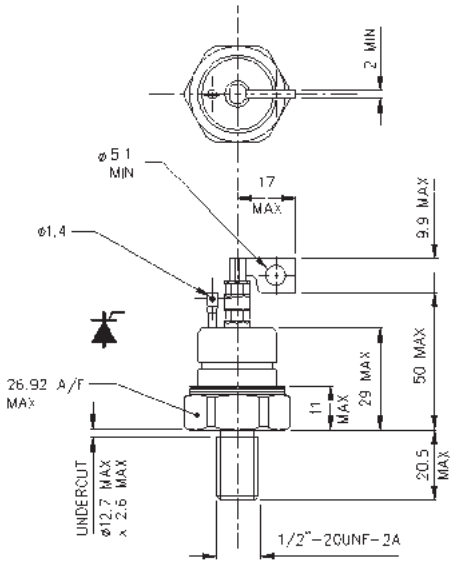

W17 - 101A231

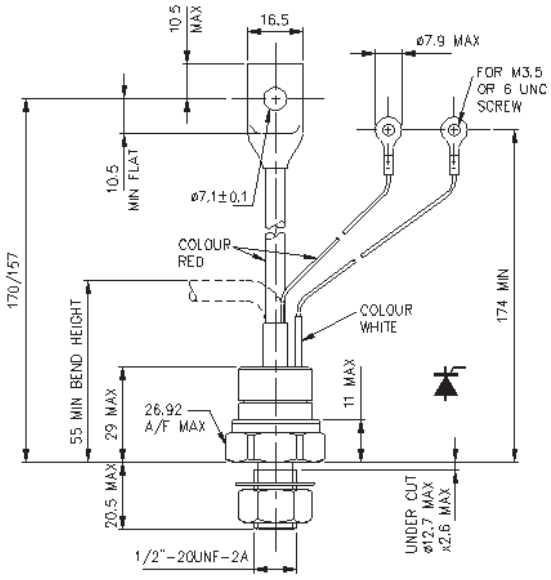

W18 - 101A225

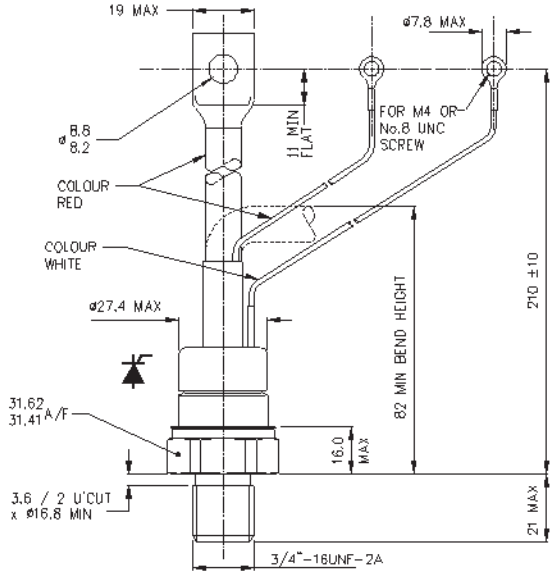

W20 - 100A303

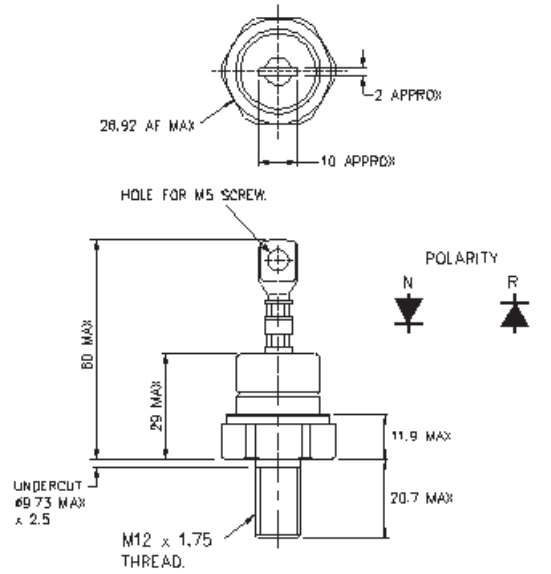

W21 - 100A294

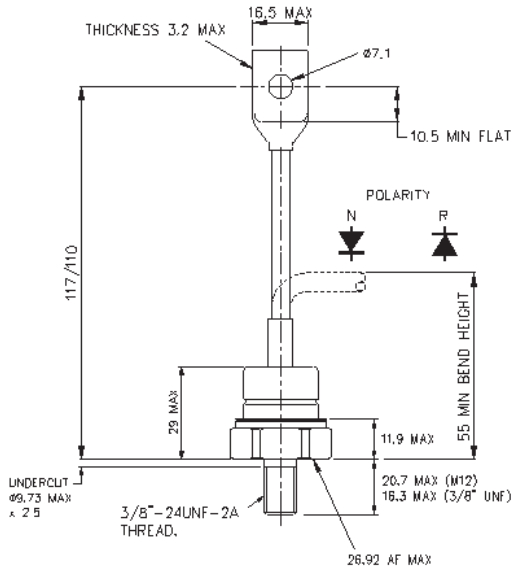

Outline drawings

Dimensions in mm and inches (1 mm = 0.0394“)

W22 - 100A297

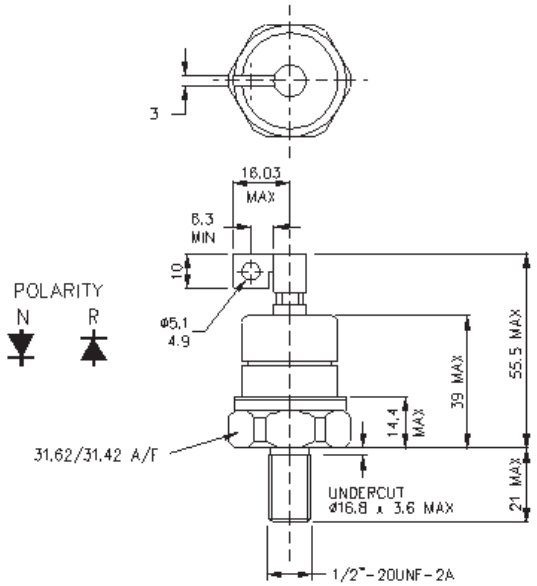

W23 - 100A281

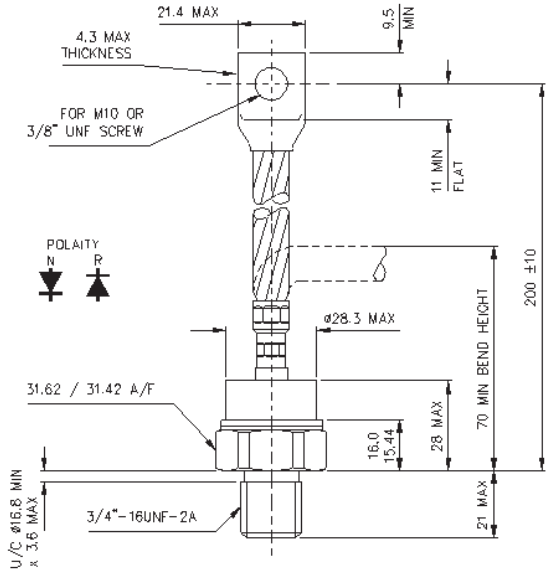

W24 - 100A280

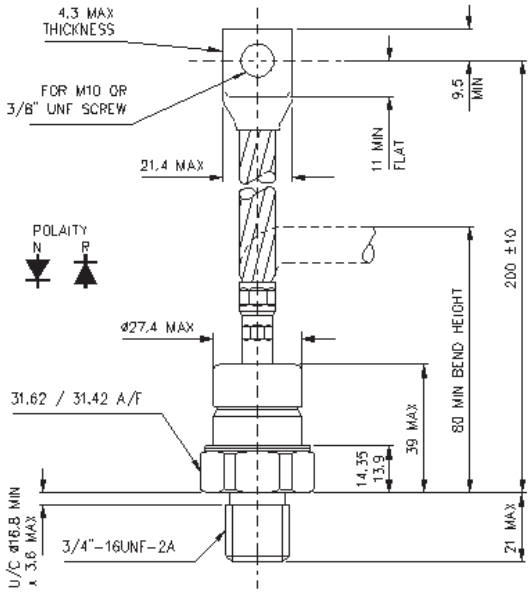

W28 - 100A330

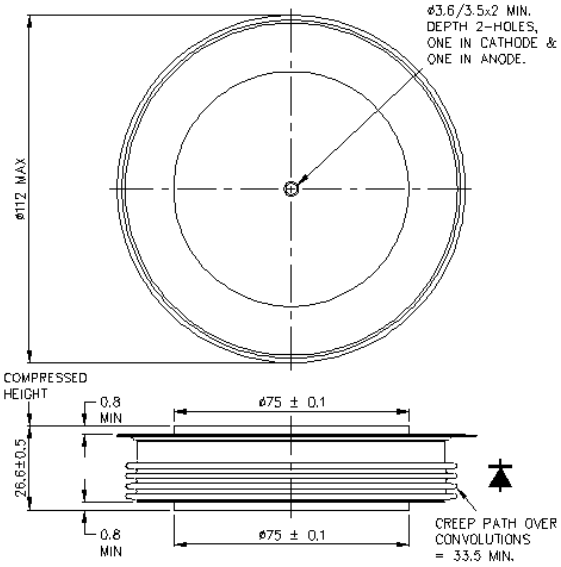

W29 - 100A342

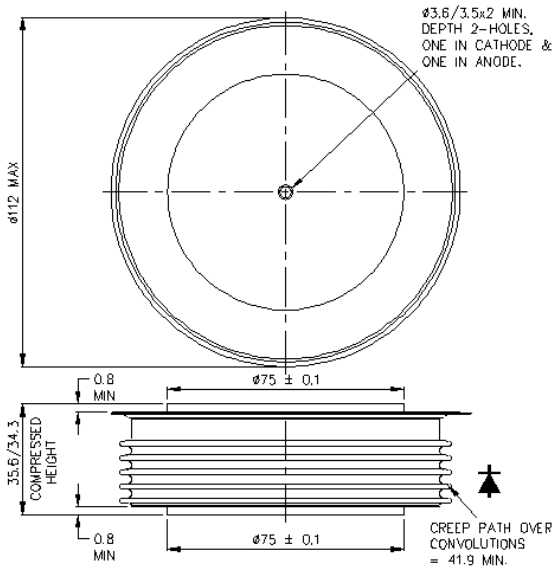

W33 - 101A346

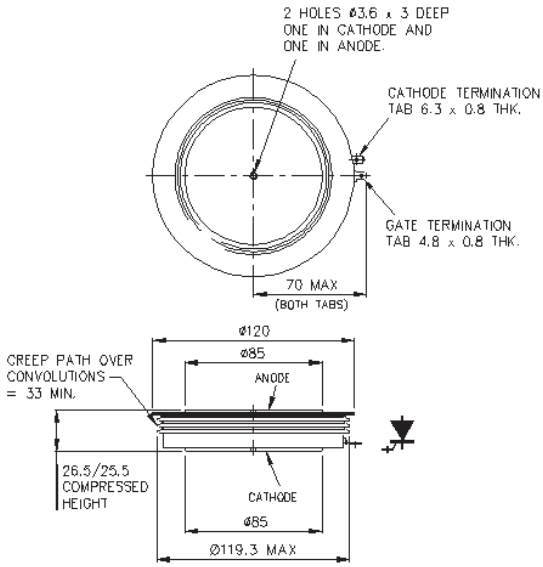

Outline drawings

Dimensions in mm and inches (1 mm = 0.0394“)

W34 - 101A287

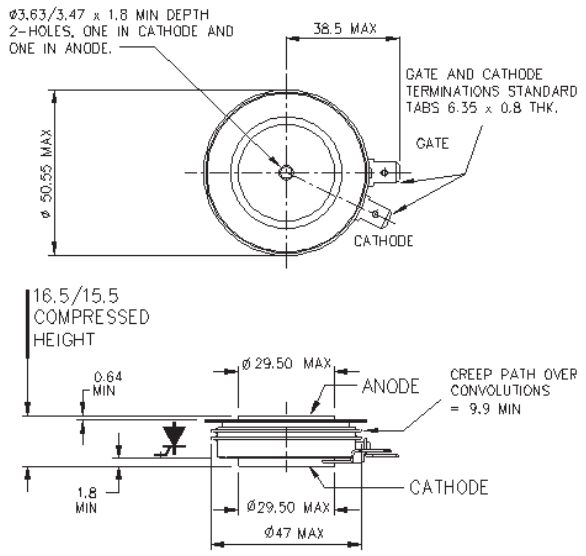

W35 - 101A358

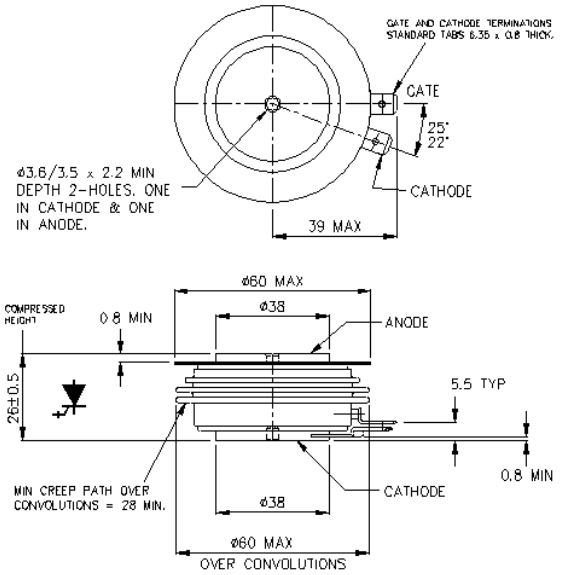

W36 - 101A288

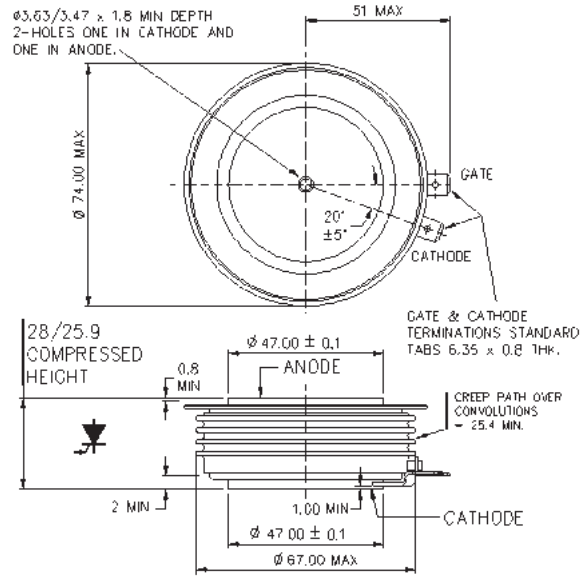

W37 - 100A325

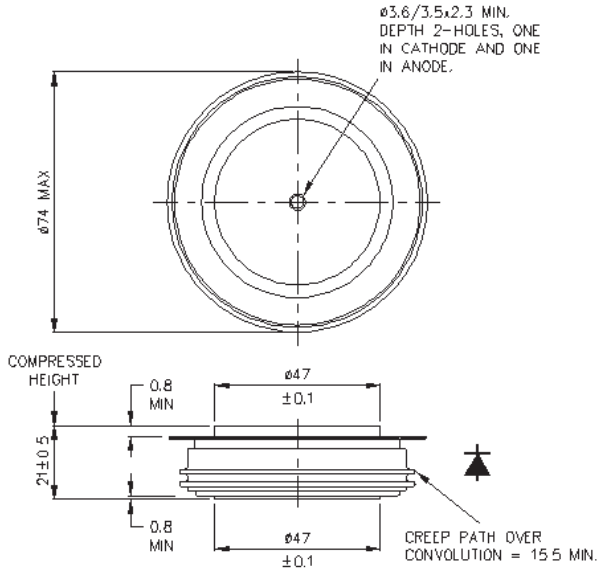

W39 - 100A338

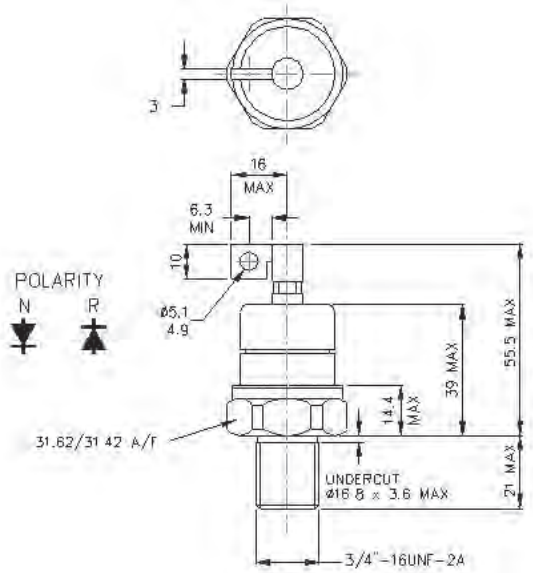

W40 - 171A107

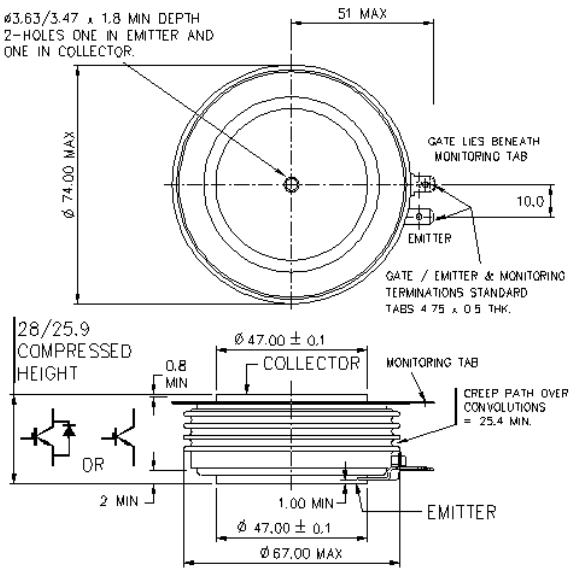

Outline drawings

Dimensions in mm and inches (1 mm = 0.0394“)

W41 - 171A108

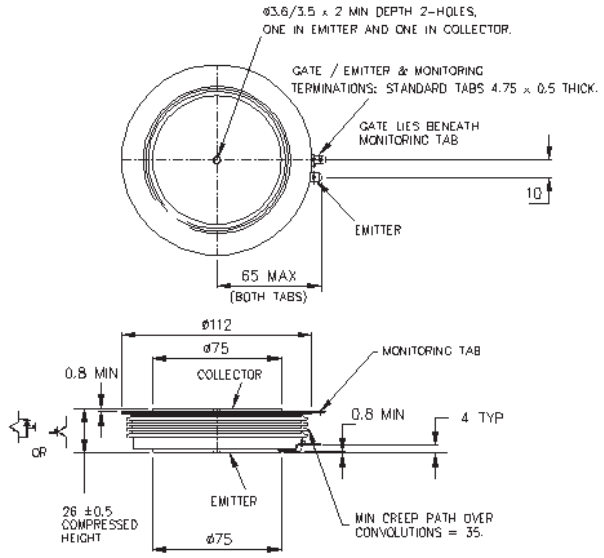

W42- 100A310

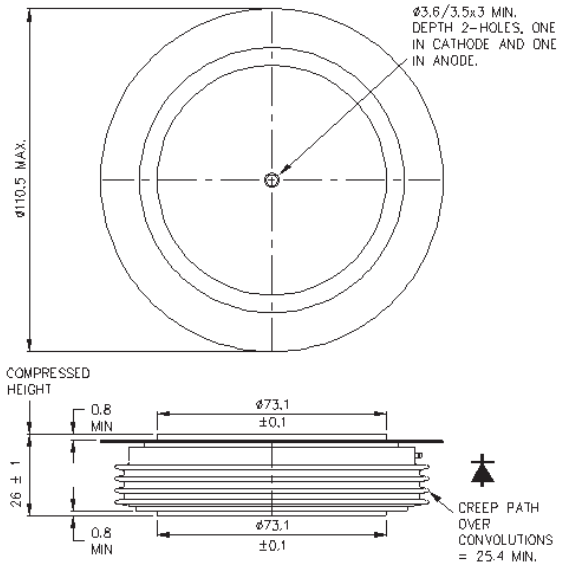

W43 - 100A320

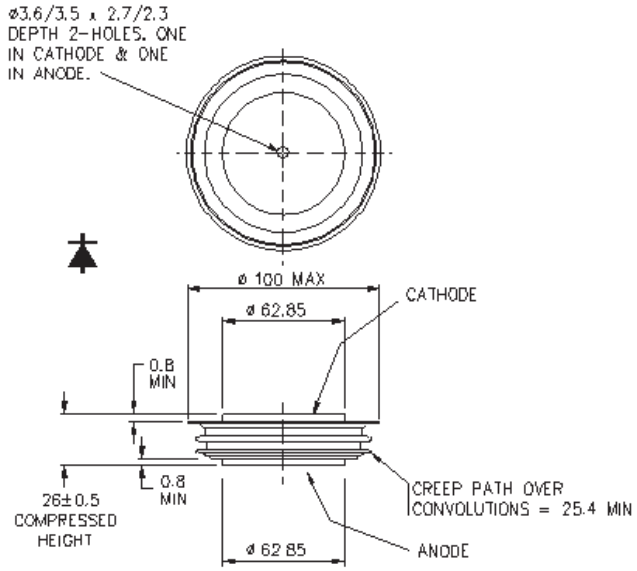

W44 - 101A340

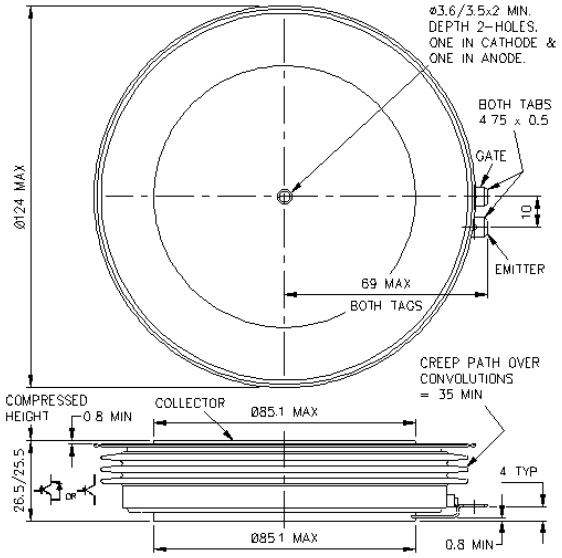

W45 - 101A359

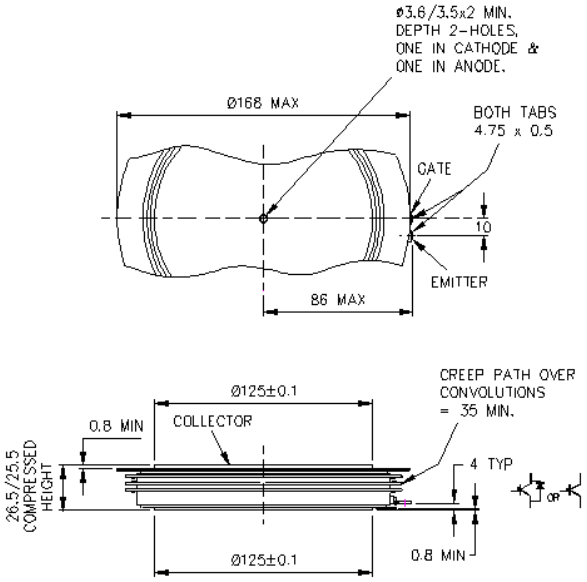

W46 - 101A305

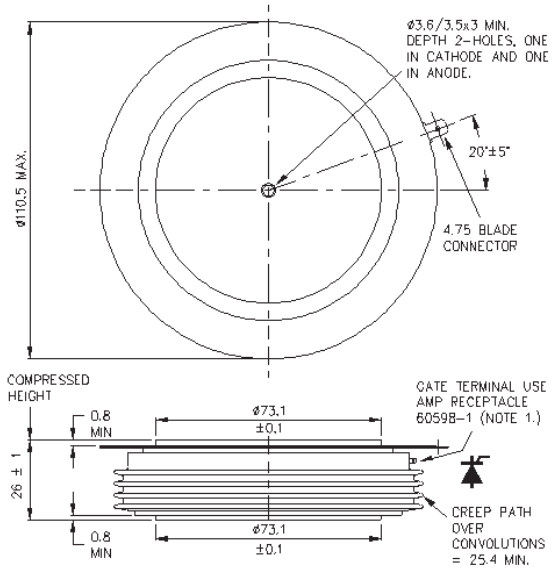

IXYS UK WESTCODE

Dimensions in mm and inches (1 mm = 0.0394“)

W46x

WC46*

Device outline W46 is available with a slightly reduced height of 25 mm.

At the time of going to press, this option only applies to two Phase Control Thyristors:
N3880ZD160-180 and N6012ZD020-060.

Please refer to Chippenham Factory.

W47 - 100A322

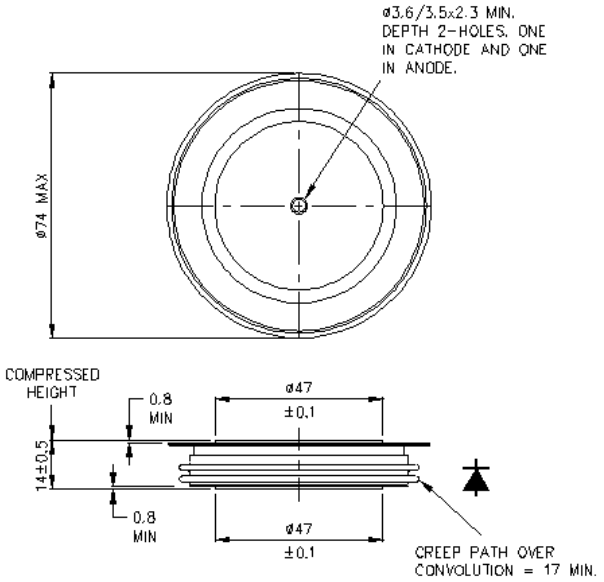

W48 - 101A347

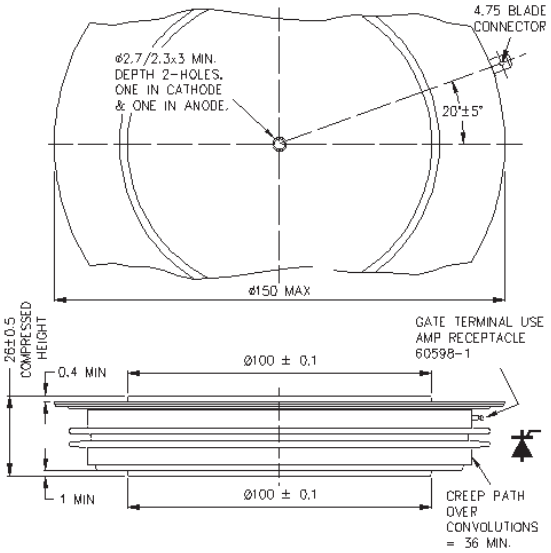

W49 100A354

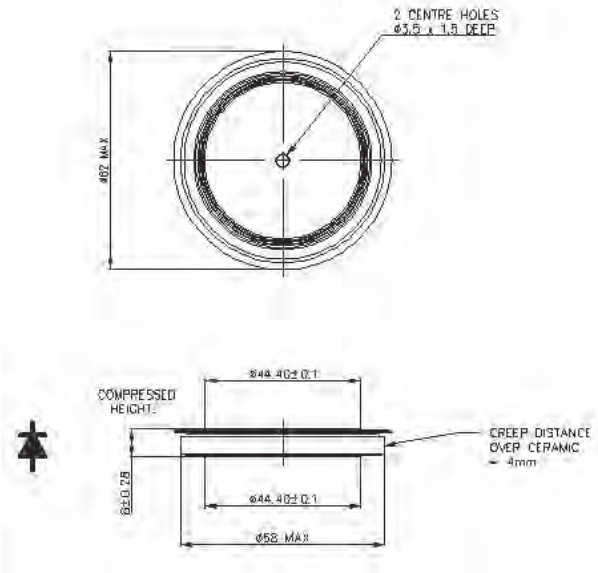

W51 - 101A334

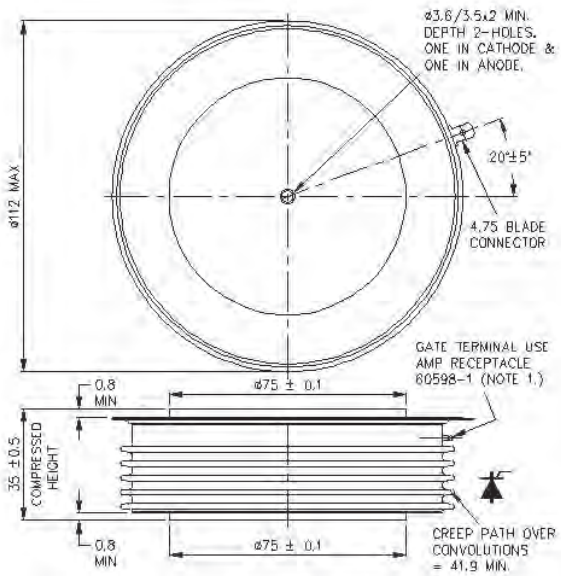

W52 - 100A328

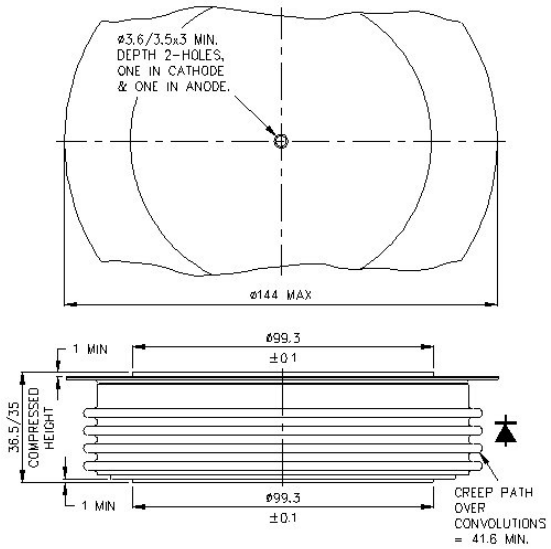

Outline drawings

Dimensions in mm and inches (1 mm = 0.0394“)

W54 - 100A353

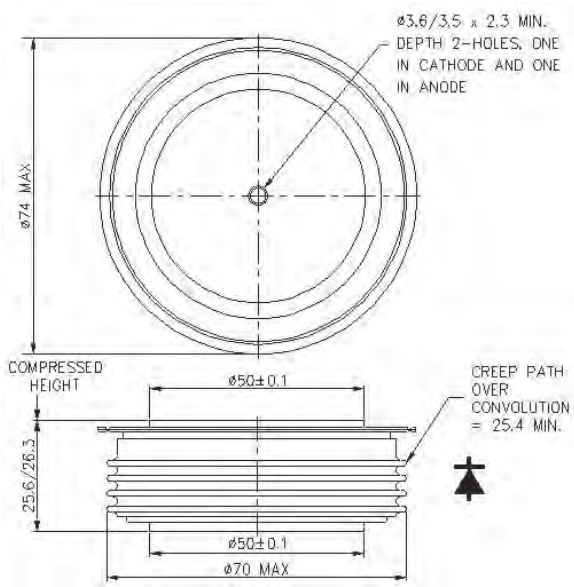

W55 - 101A352

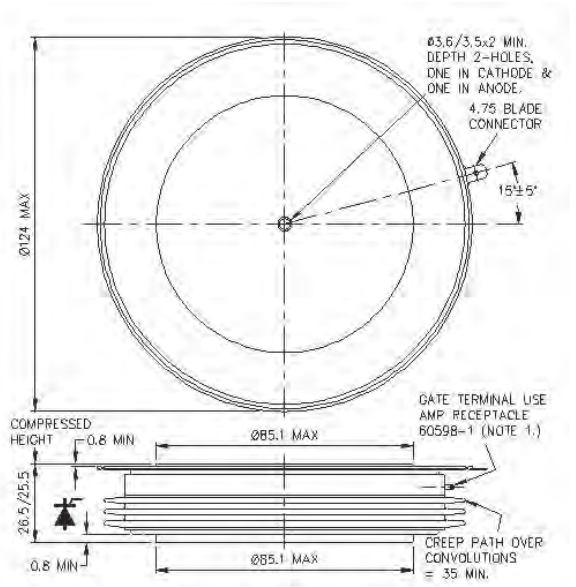

W56 - 101A365

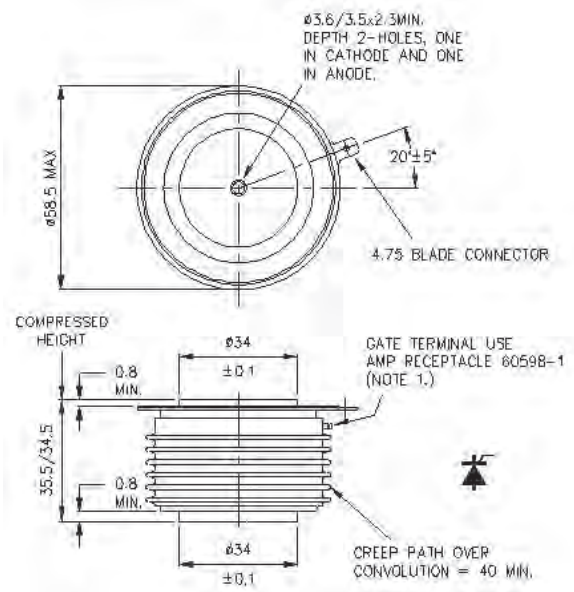

W57 - 101A363

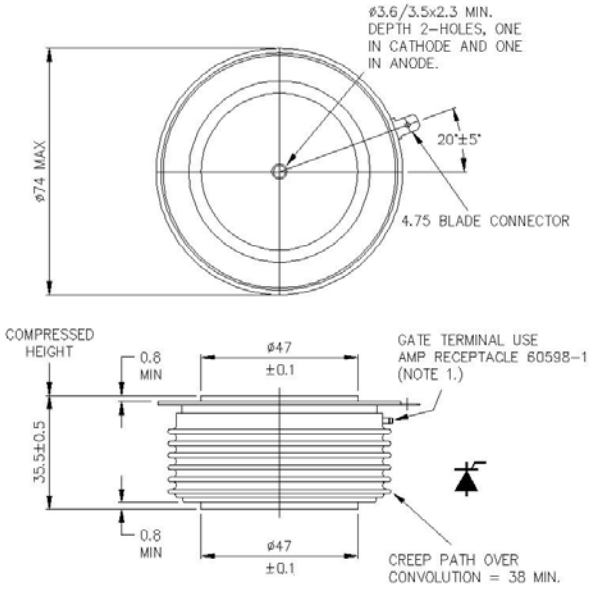

W58 - 101A237

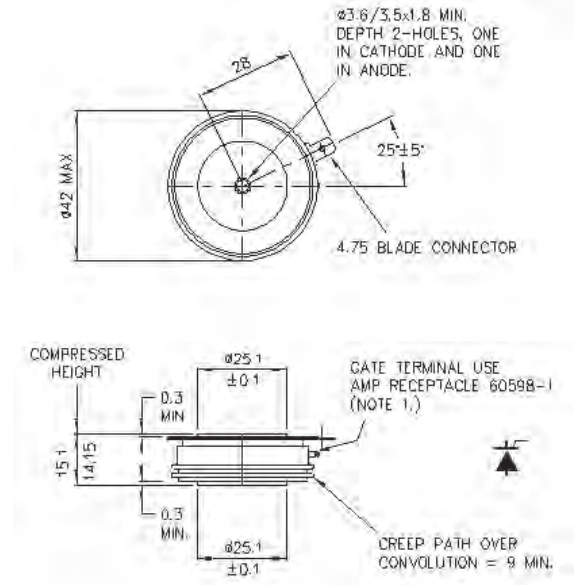

W59 - 100A359

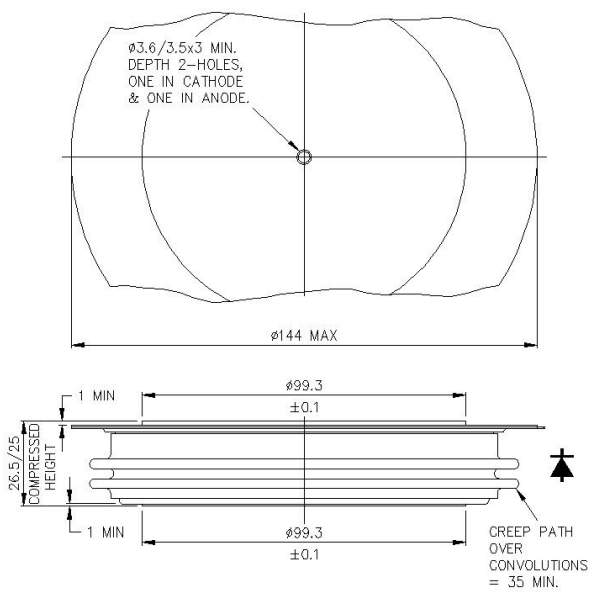

Outline drawings

Dimensions in mm and inches (1 mm = 0.0394“)

W62 - 101A314

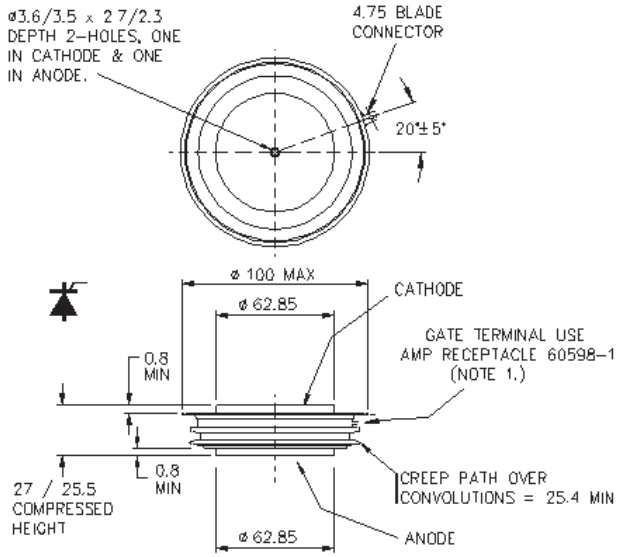

W63 - 150A111

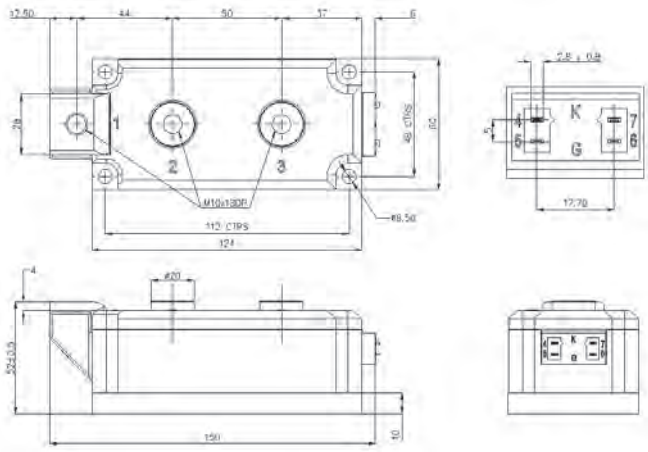

W64 - 150A113

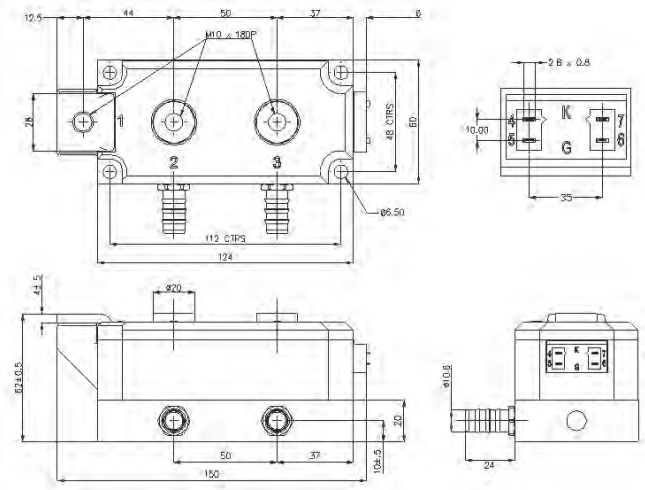

W67 - 101A366

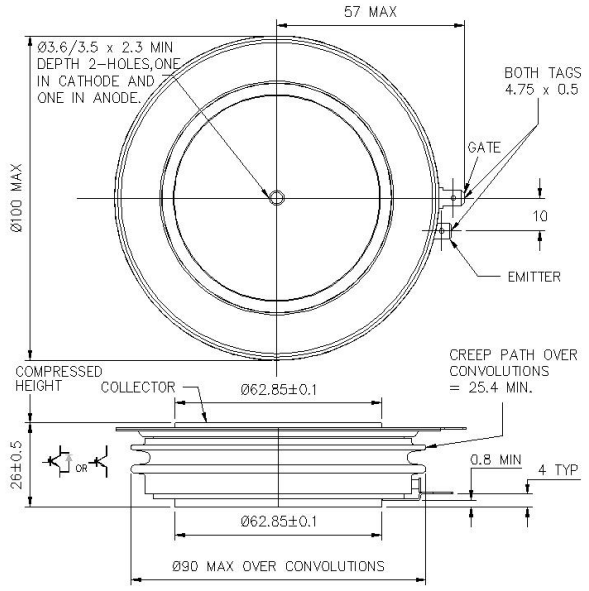

W68 - 100A367

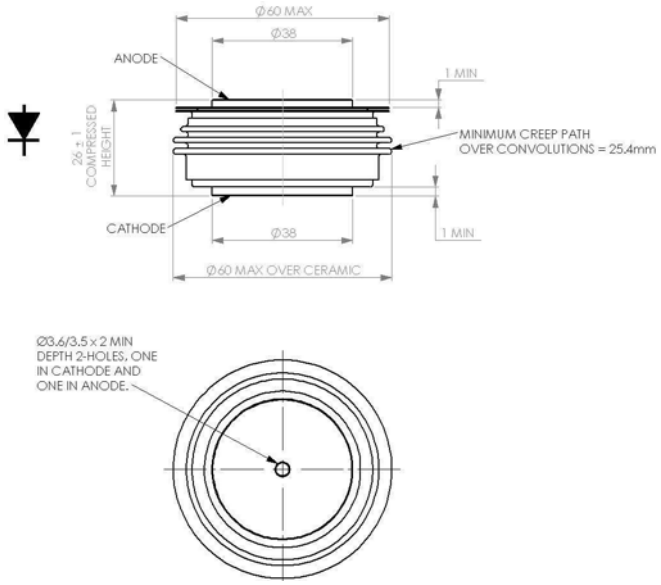

W70 - 101A357

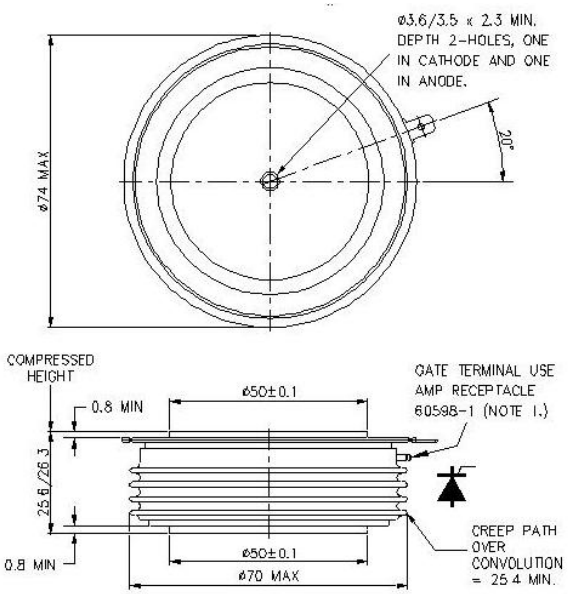

Outline drawings

Dimensions in mm and inches (1 mm = 0.0394“)

W71 - 101A375

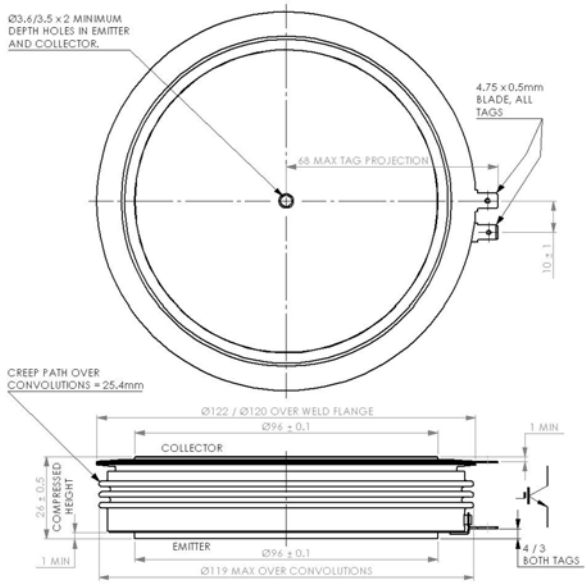

W73 - 150A122

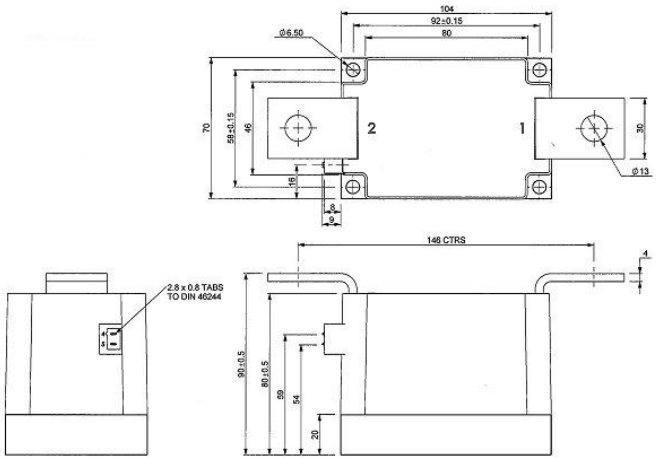

W74 - 150A123

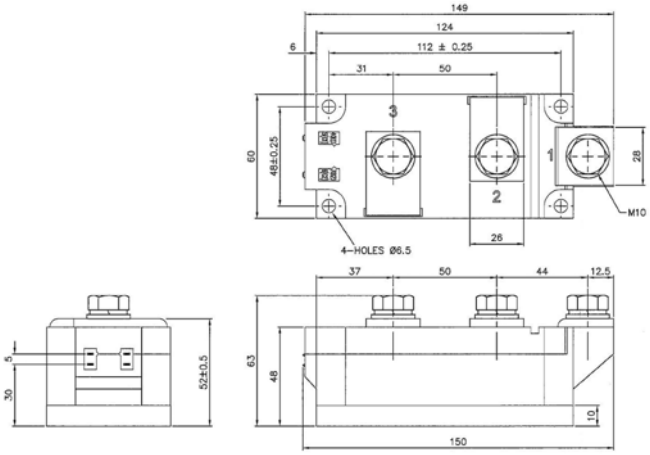

W75 - 101A377

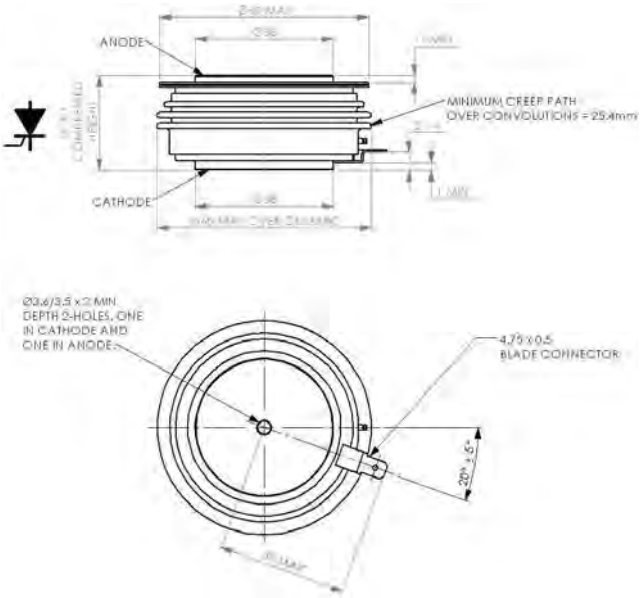

W76 - 101A392

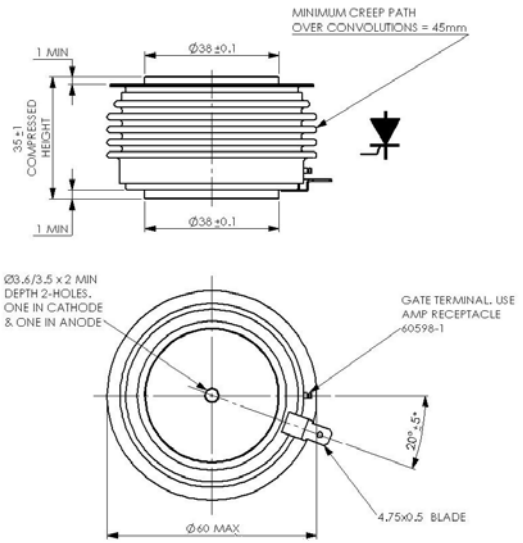

W77 - 101A372

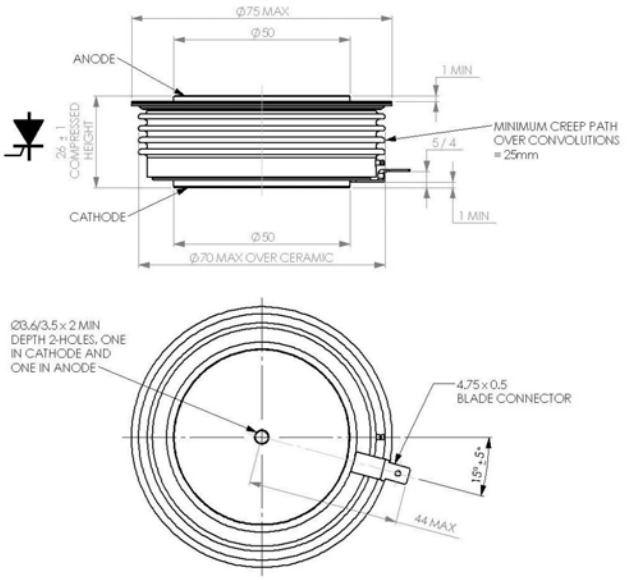

Outline drawings

Dimensions in mm and inches (1 mm = 0.0394“)

W78 - 101A393

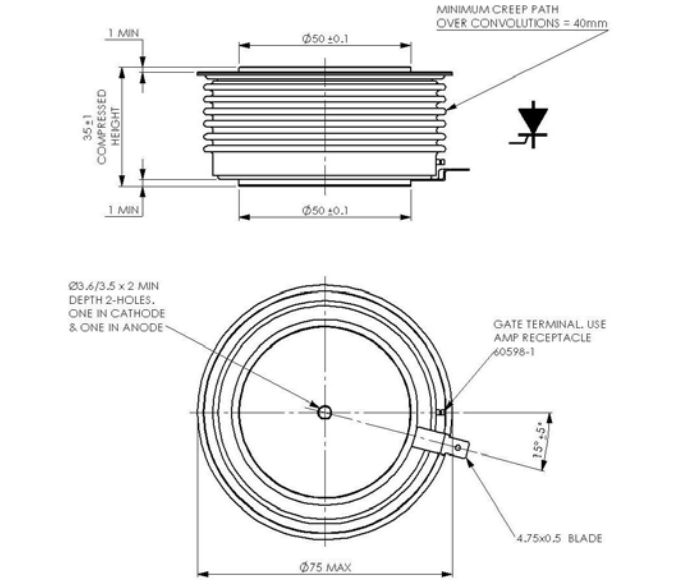

W79 - 101A391

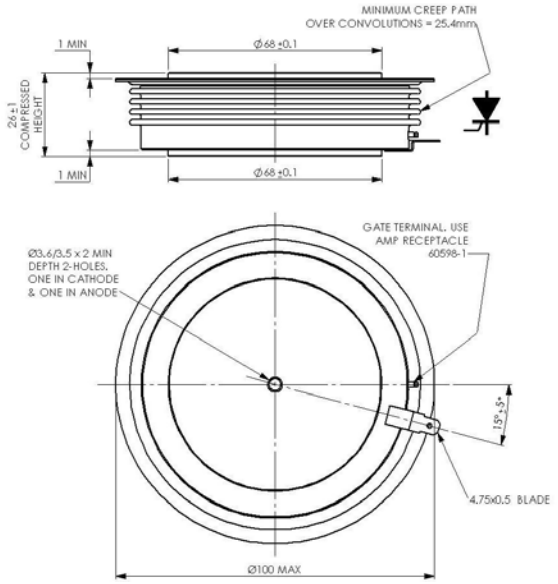

W80 - 101A394

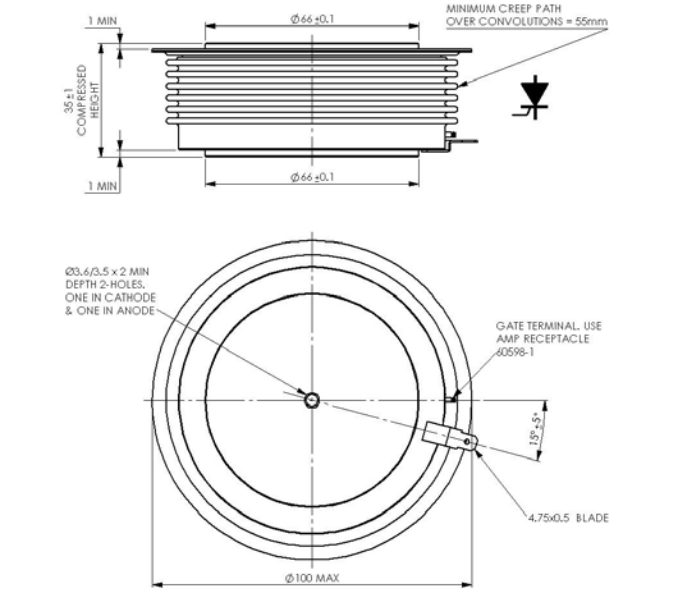

W81 - 101A373

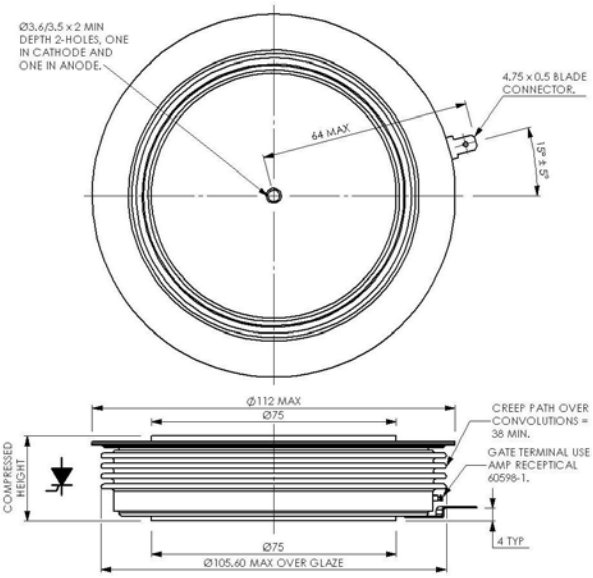

W82 - 101A395

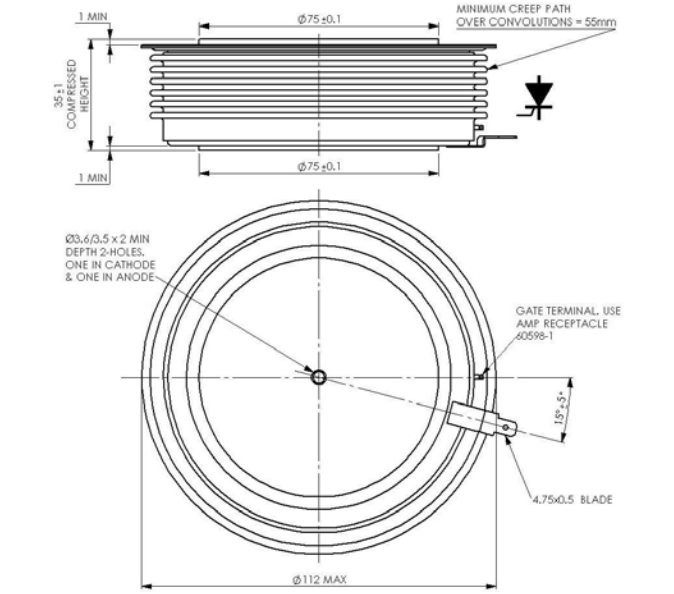

W85 - 101A388

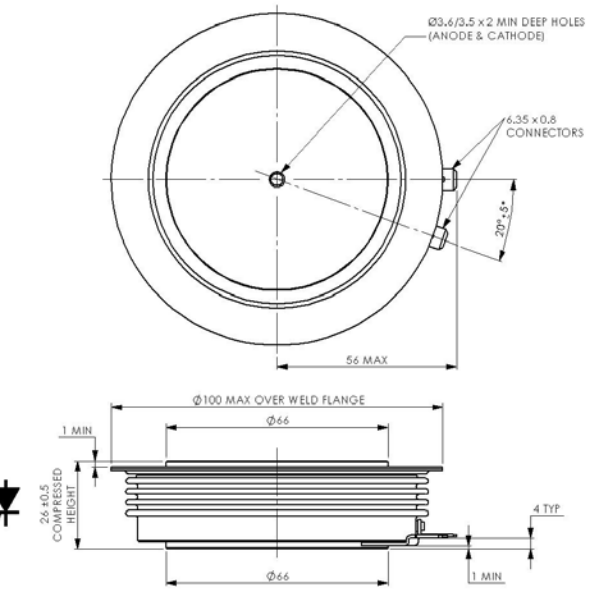

Outline drawings

Dimensions in mm and inches (1 mm = 0.0394“)

W86 - 101A316

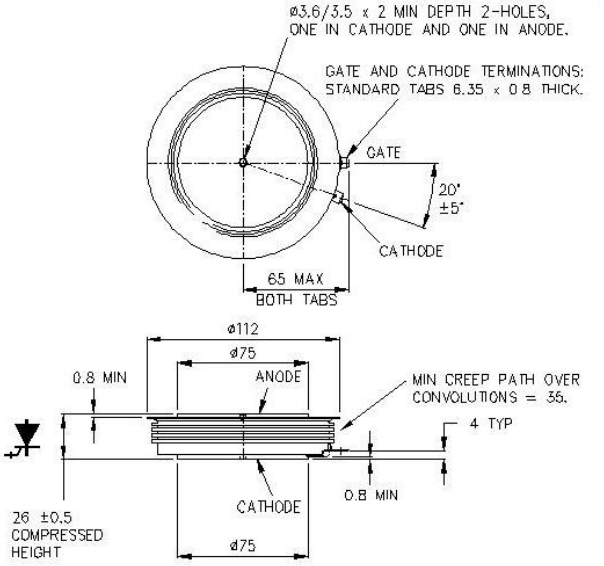

W87 101A376

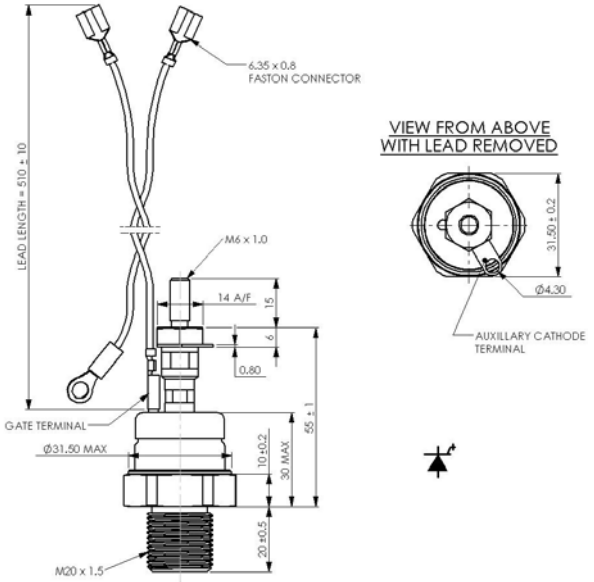

W88 - 150A124

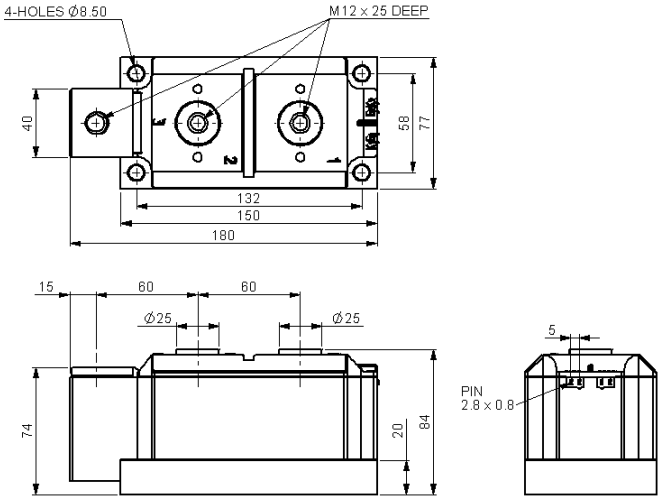

W89 - 100A368

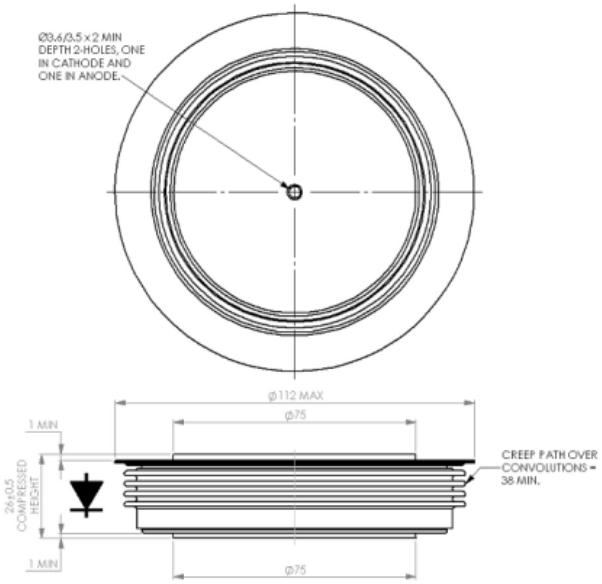

W90 - 101A405

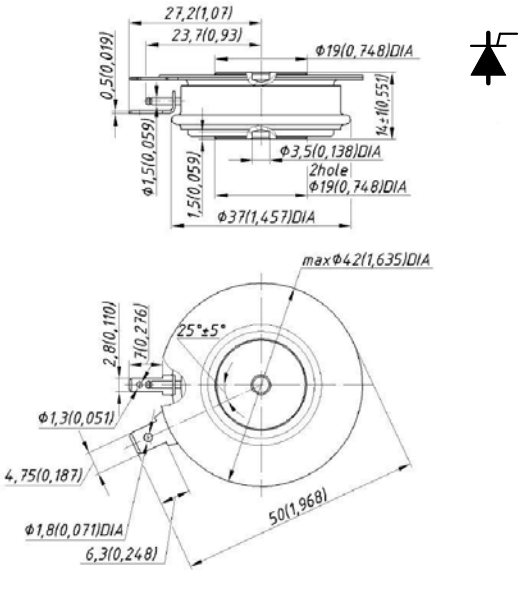

W91 - 101A406

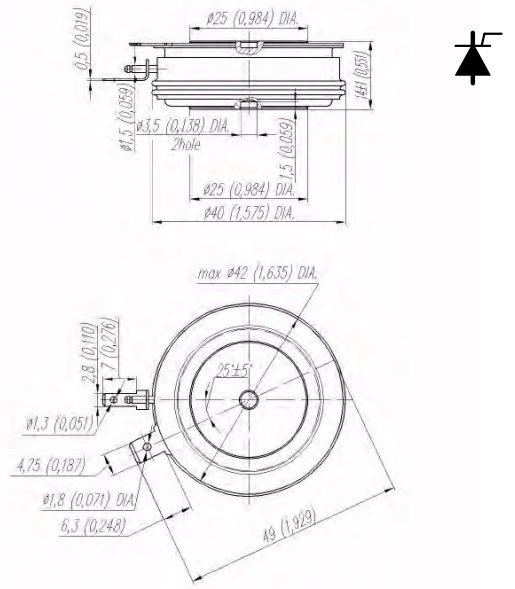

Outline drawings

Dimensions in mm and inches (1 mm = 0.0394“)

W92 - 101A407

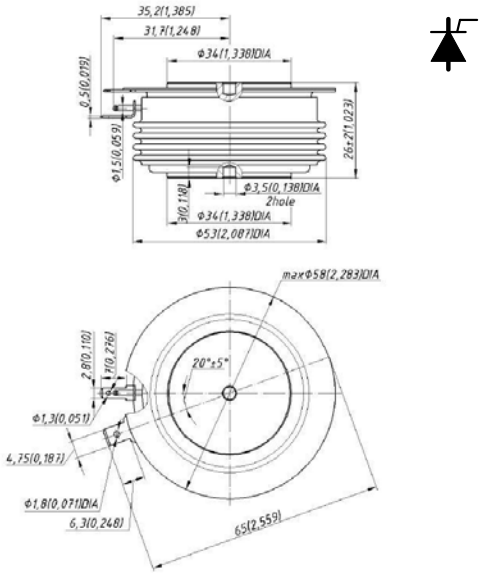

W93 - 101A404

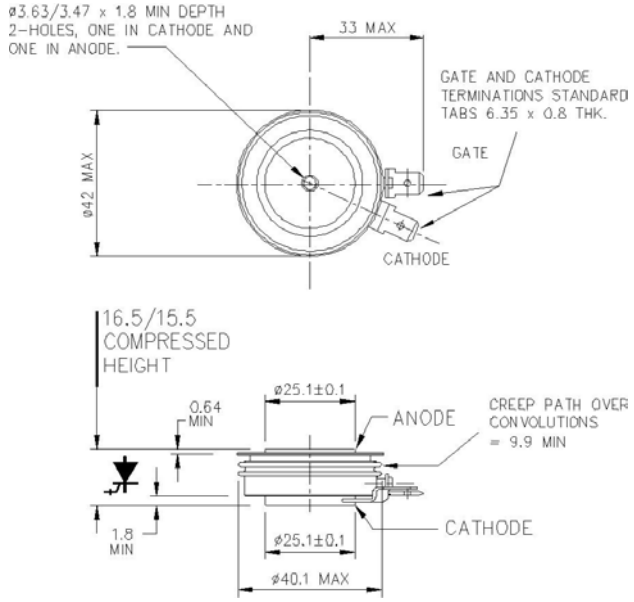

W94 - 100A372

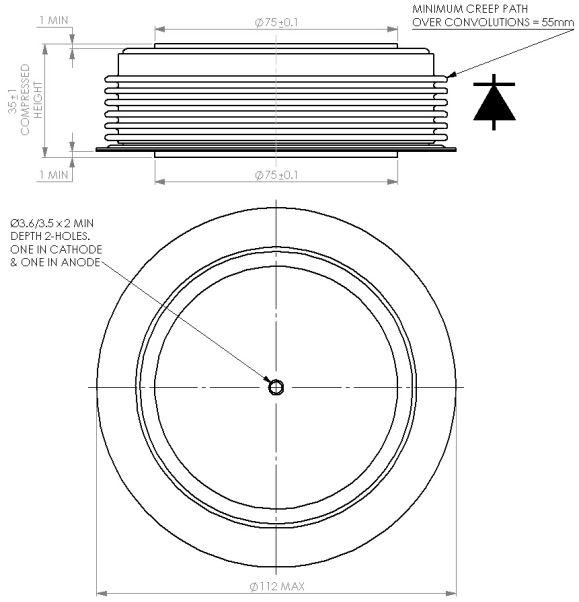

W95 - 101A403

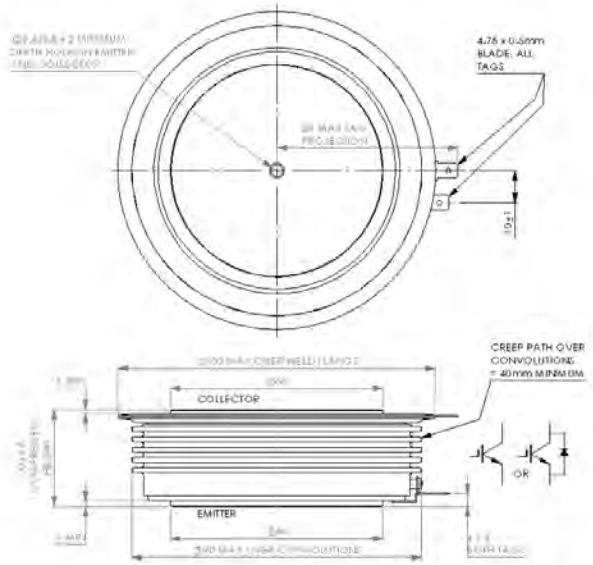

W96 - 101A409

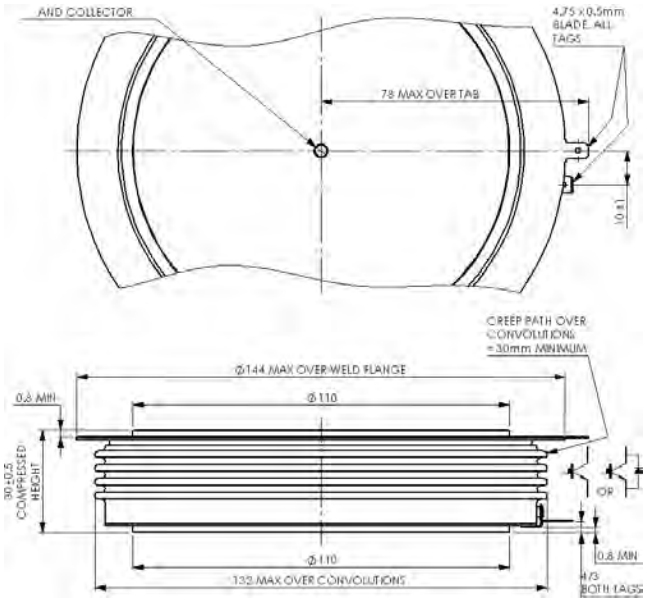

W97 - 100A379

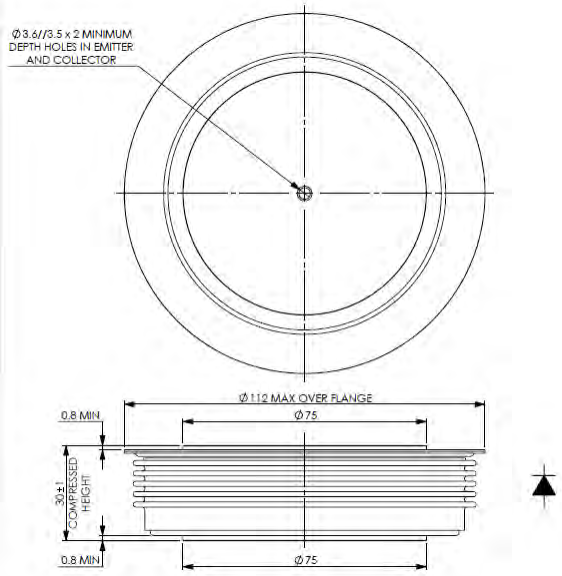

Outline drawings

Dimensions in mm and inches (1 mm = 0.0394“)

W98 - 101A413

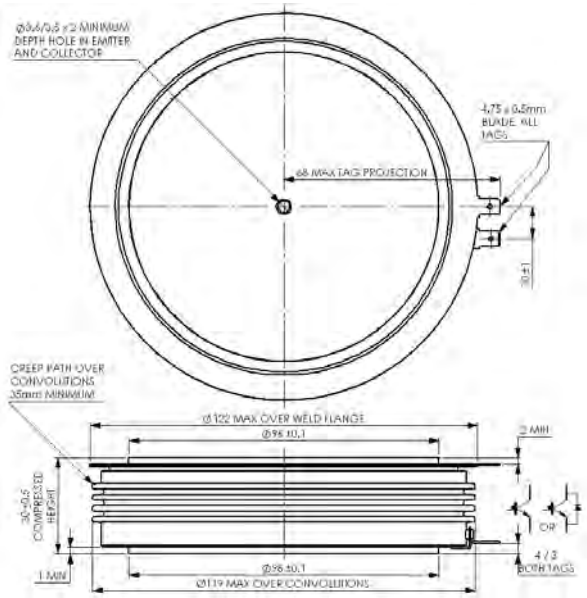

W99 - 100A383

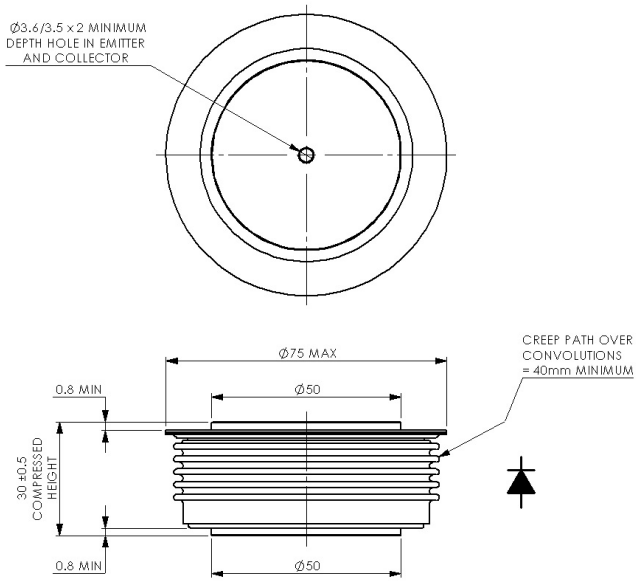

W100 - 100A384

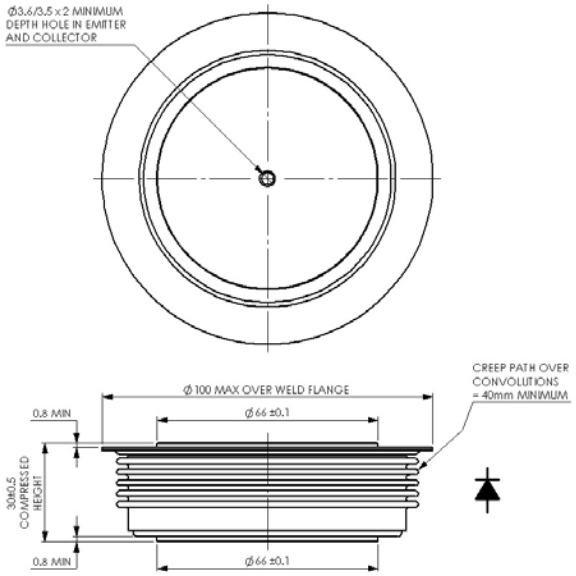

W101 - 100A380

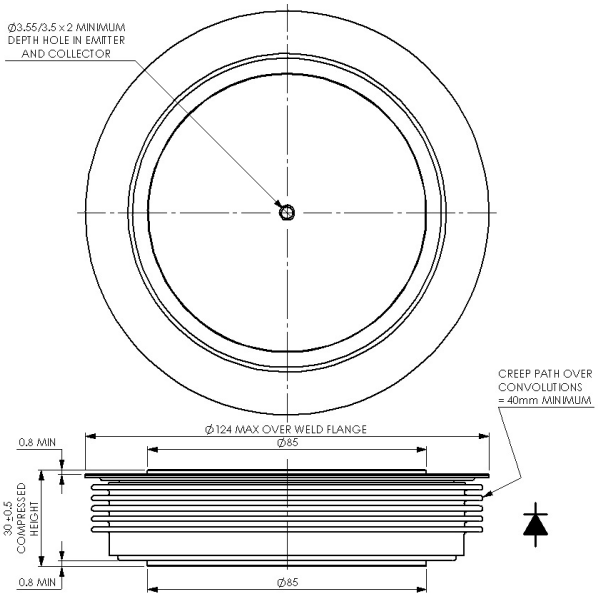

W102 - 150A125

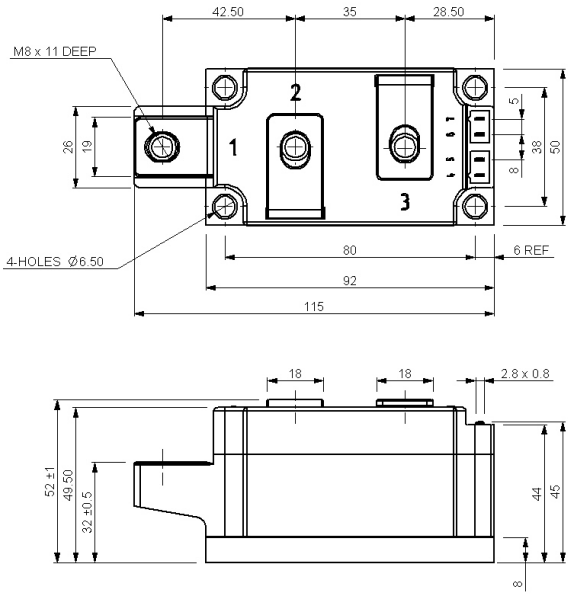

W103 - 101A401

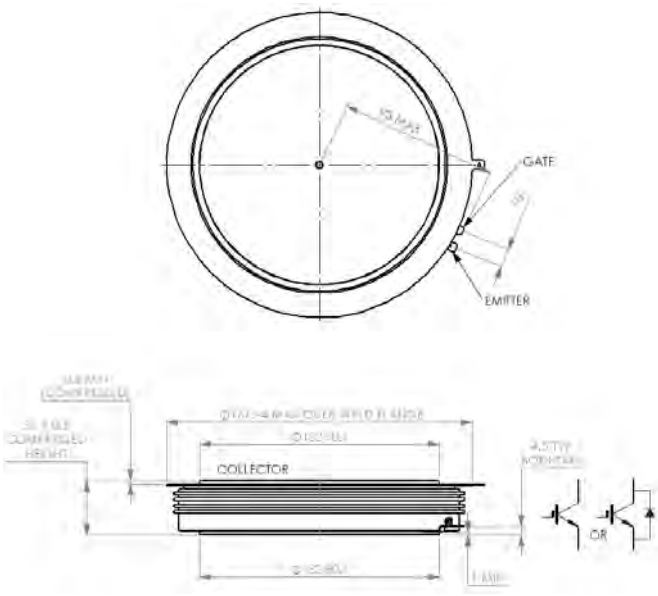

Outline drawings

Dimensions in mm and inches (1 mm = 0.0394“)

W104 - 101A408

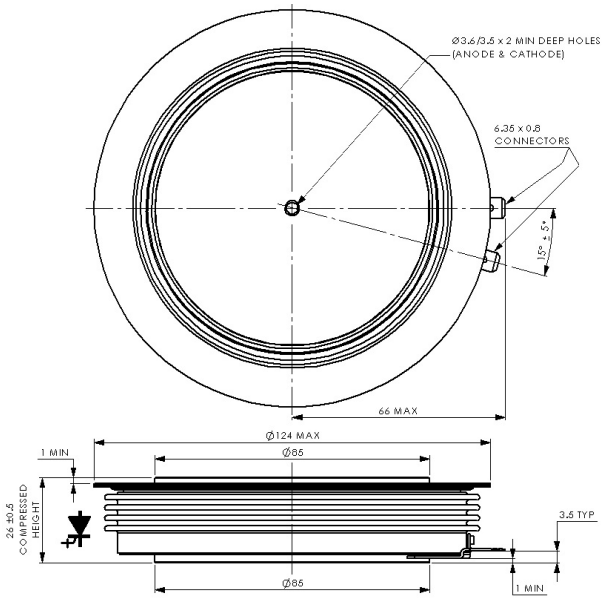

WD2 - 100A335

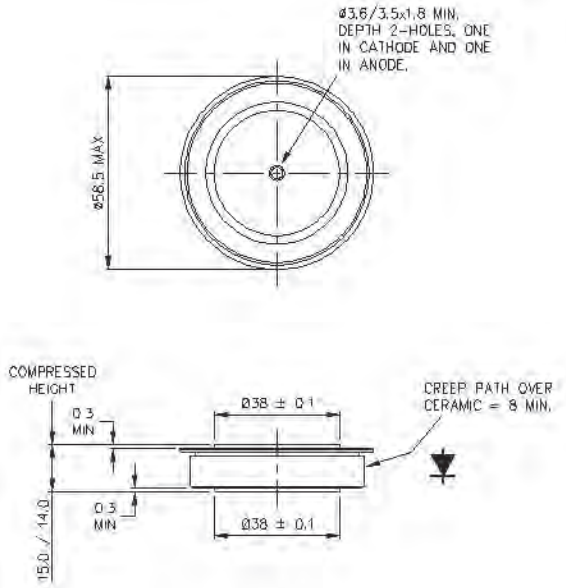

WD3 - 100A356

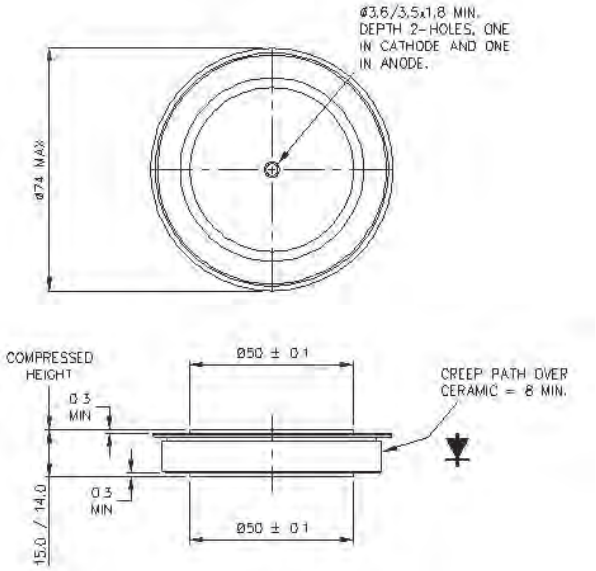

WD5 - 100A361 - 26 mm thick

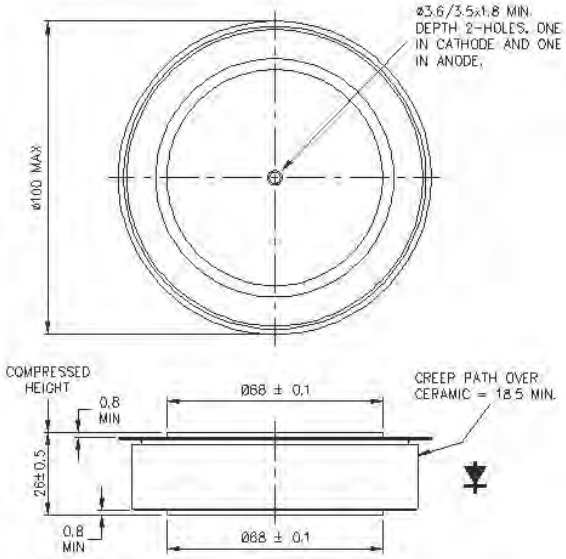

WD6 - 100A360 - 33 mm thick

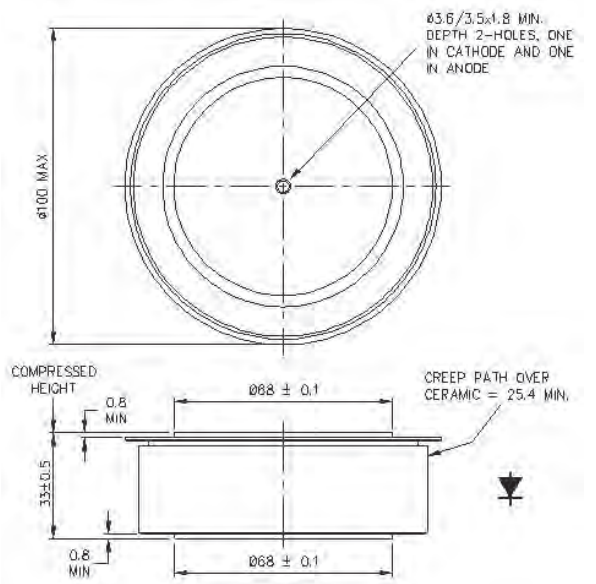

WD7 - 100A363

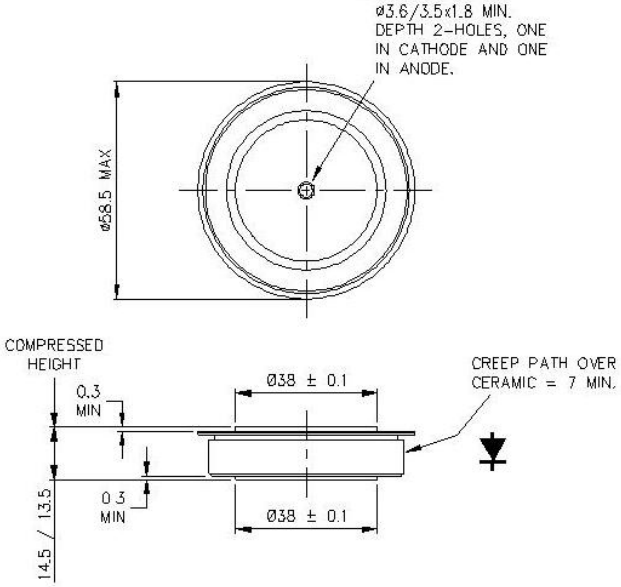

Outline drawings

Dimensions in mm and inches (1 mm = 0.0394“)

WP1 - 101A361

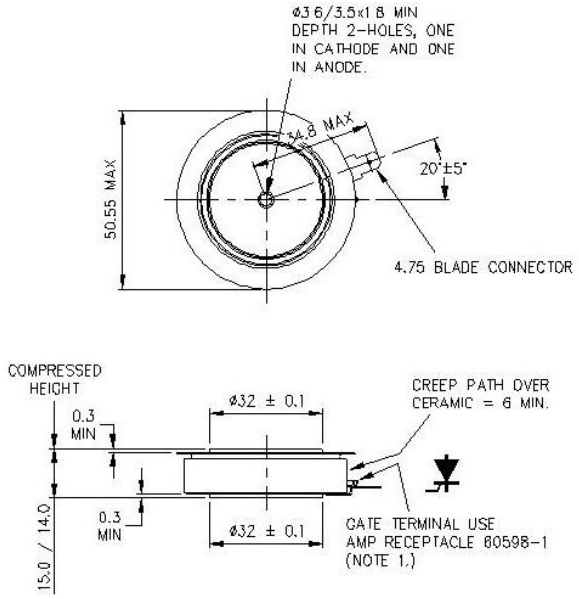

WP2 - 101A354

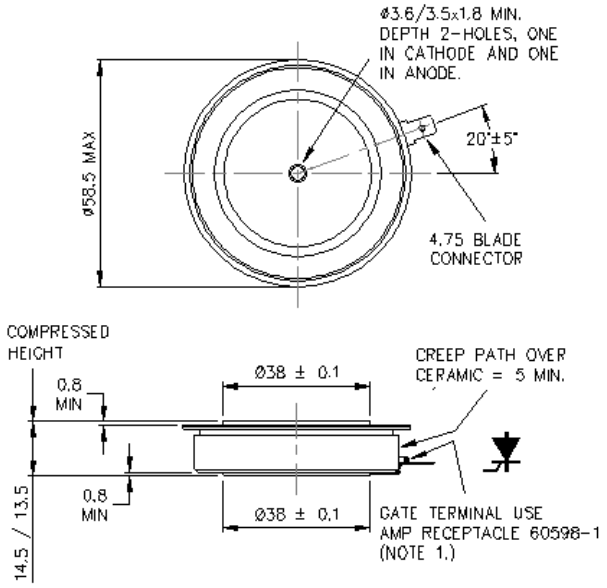

WP3 - 101A353

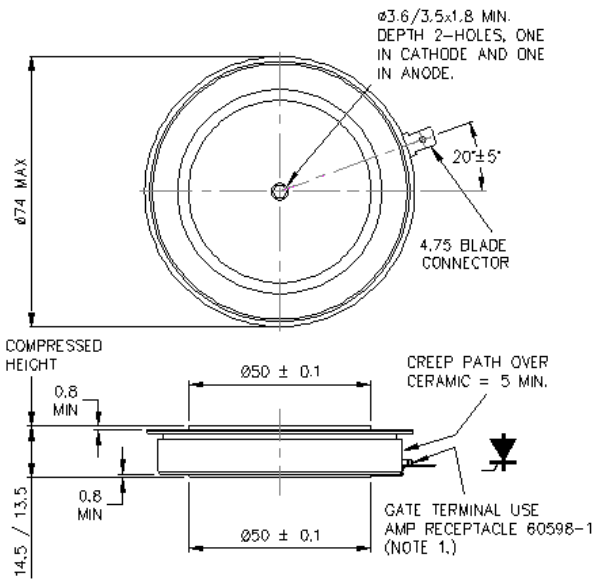

WP4 - 101A355

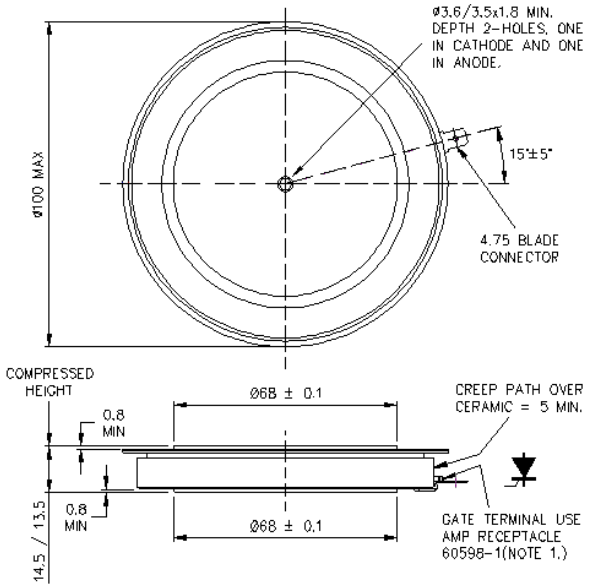

WP5 - 101A356

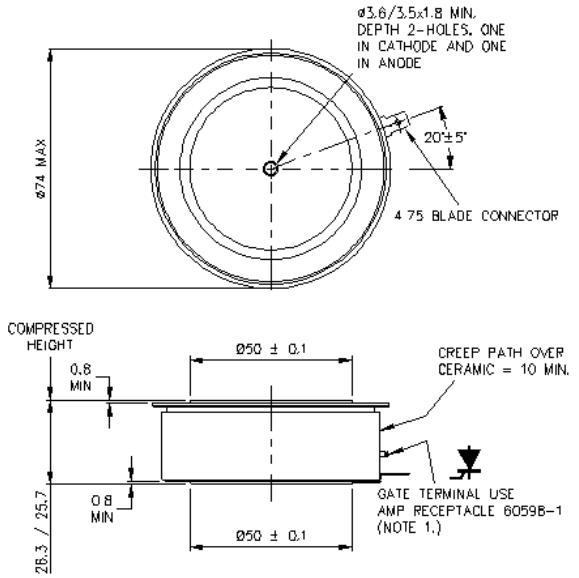

WP6 - 101A389

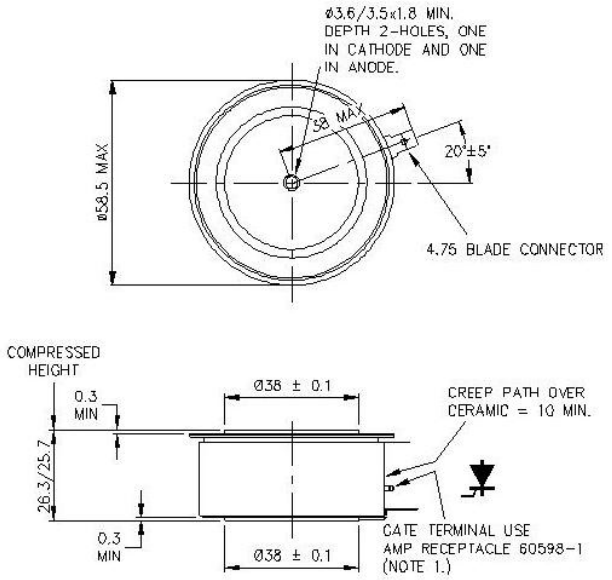

Outline drawings

Dimensions in mm and inches (1 mm = 0.0394“)

WC1 - XK0450SA056M

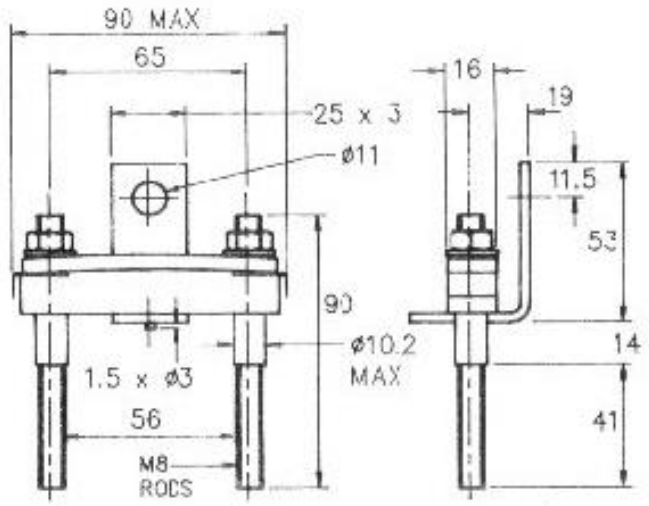

WC2 - XK0450DA056M

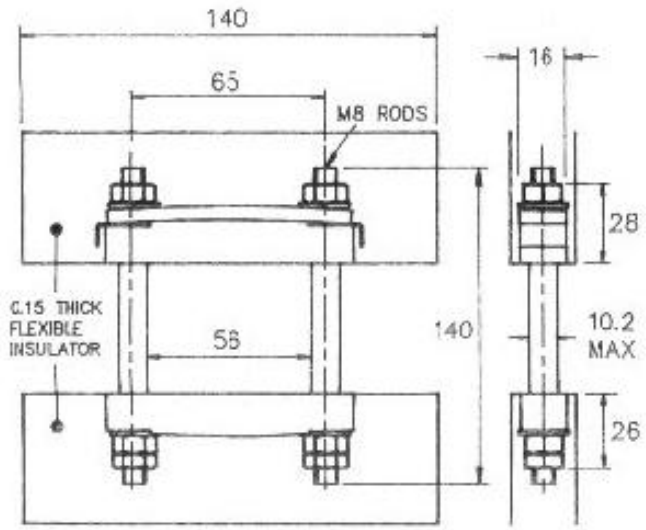

WC3 - XK0450DT056M

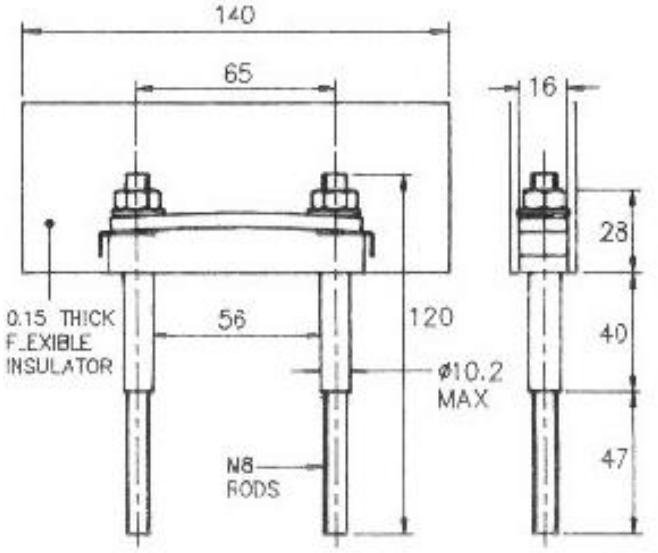

WC4 - XK0550SA056M

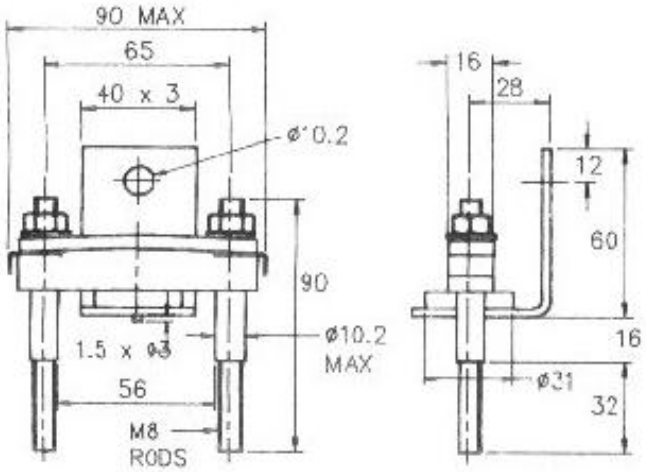

WC5 - XK0550DA056M

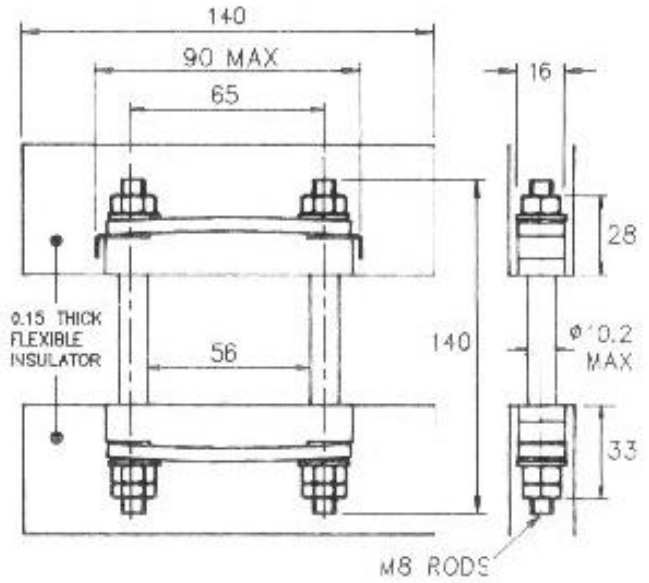

WC6 - XK0900SA056M

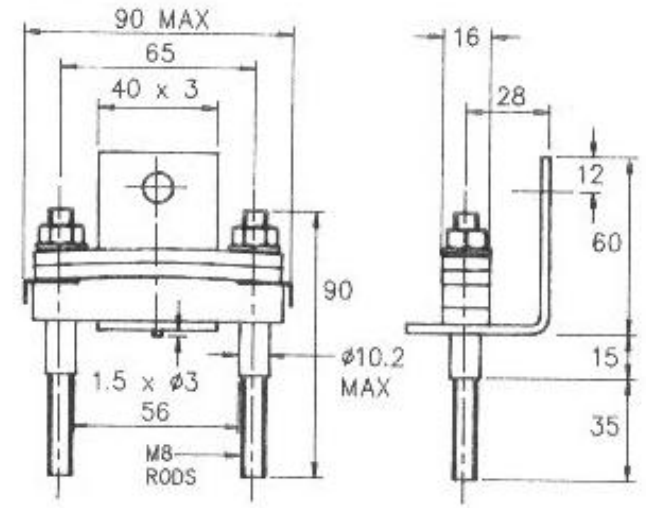

Outline drawings

Dimensions in mm and inches (1 mm = 0.0394“)

WC7 - XK0900DA056M

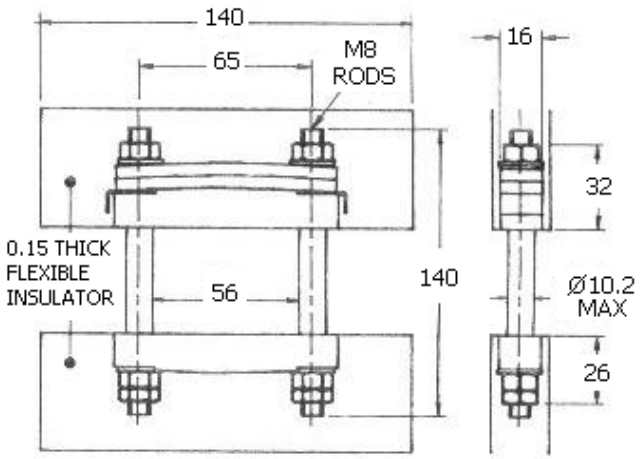

WC8 - XK0900DT056M

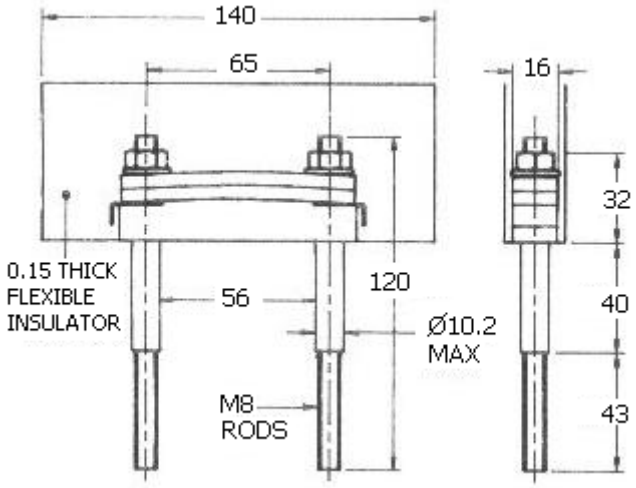

WC9 - XK0600SA074M

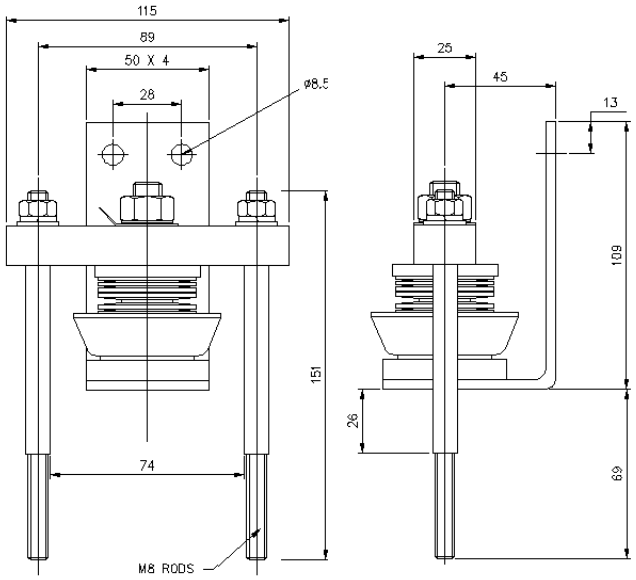

WC10 - XK0600DA074M

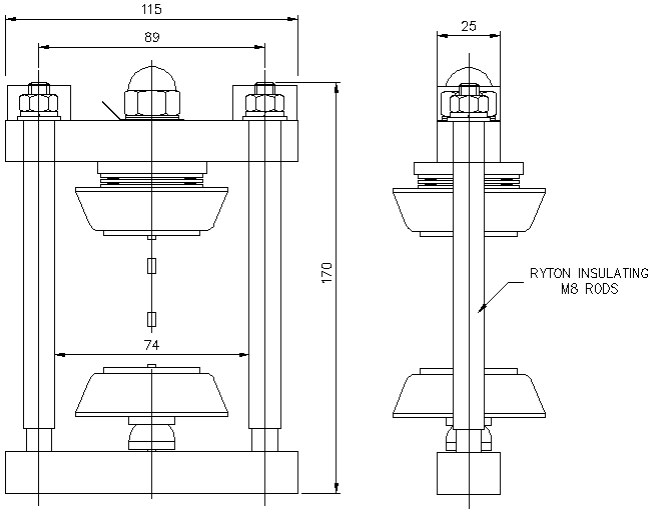

WC11 - XK1000SA074M

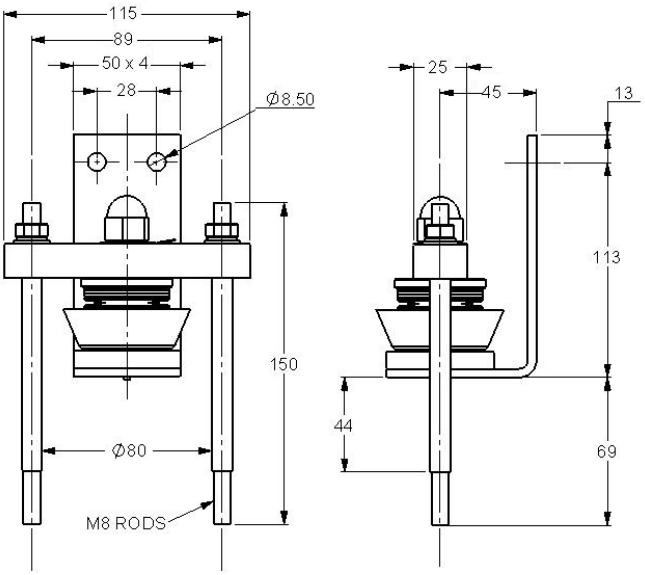

WC12 - XK1000DA074M

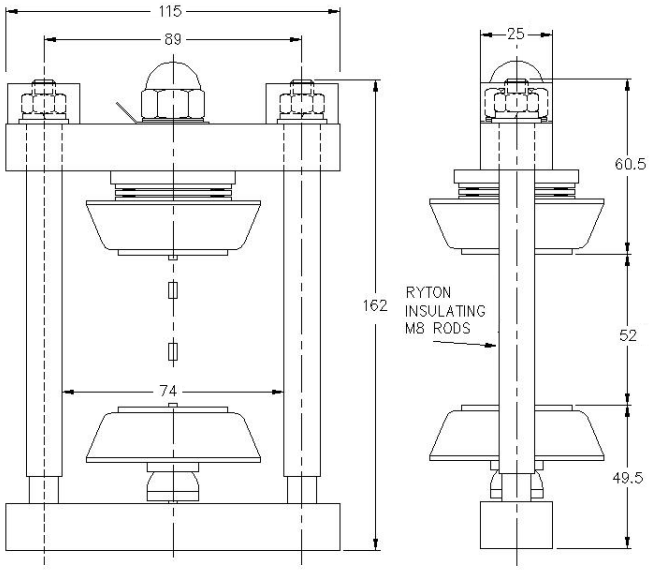

Outline drawings

Dimensions in mm and inches (1 mm = 0.0394“)

WC13 - XK1100DA076M

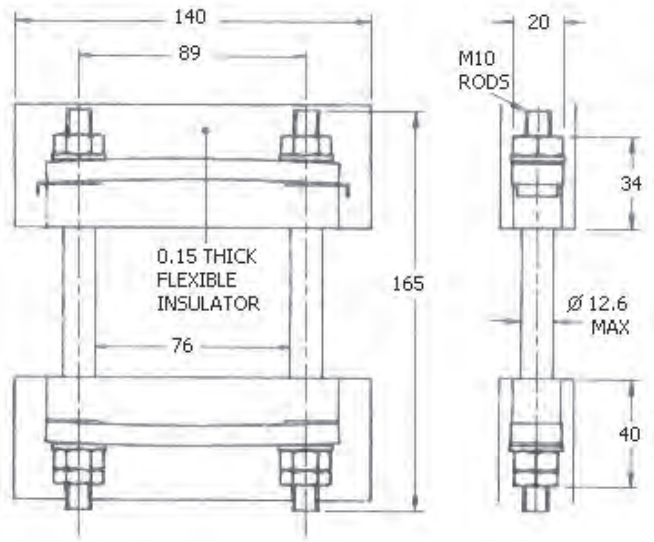

WC14 - XK1130SA076M

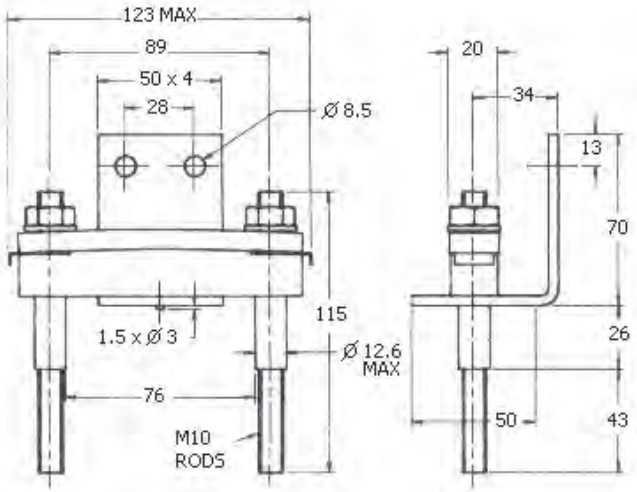

WC15 - XK1130DA076M

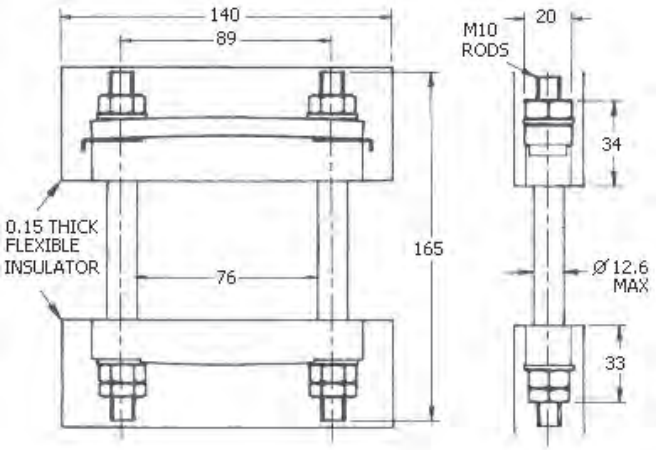

WC16 - XK1130DT076M

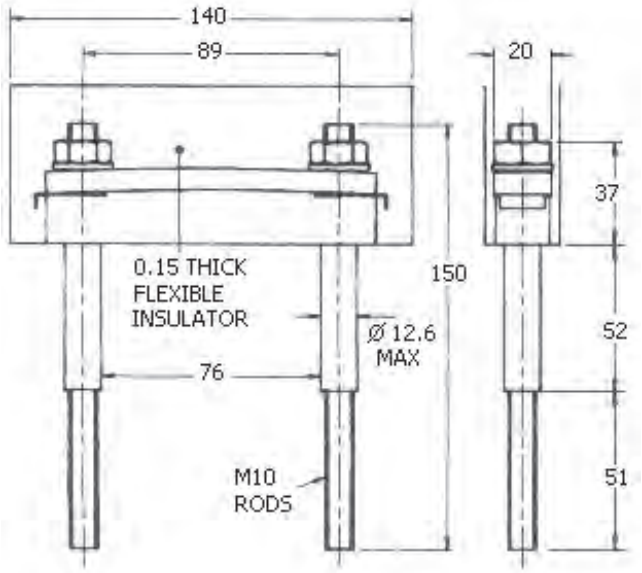

WC17 - XK1800SA076M

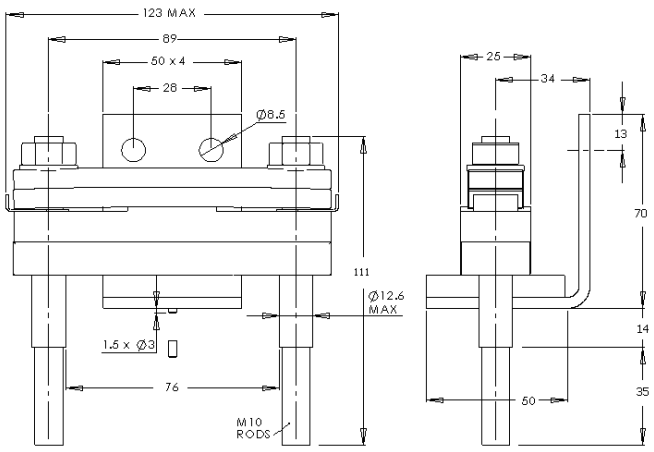

WC18 - XK1800DA076M

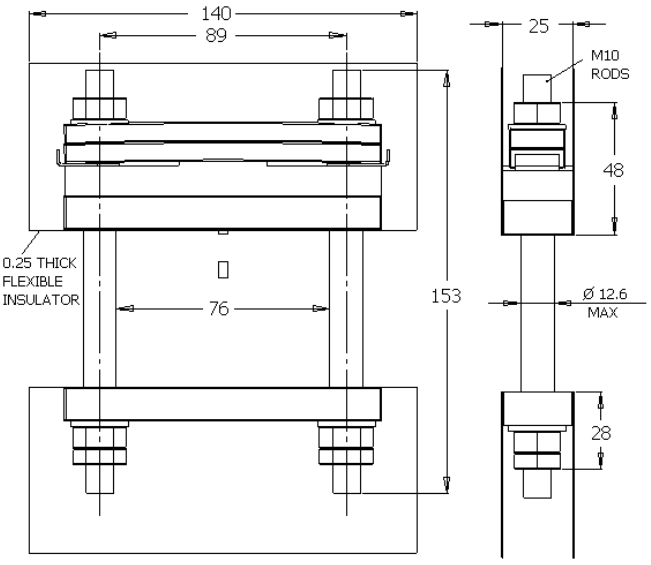

Outline drawings

Dimensions in mm and inches (1 mm = 0.0394“)

WC19 - XK1800DT076M

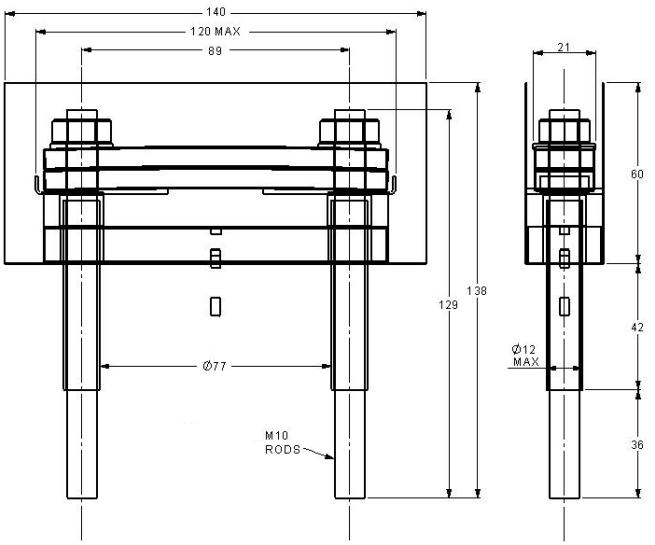

WC20 - XK2100SA076M/ML

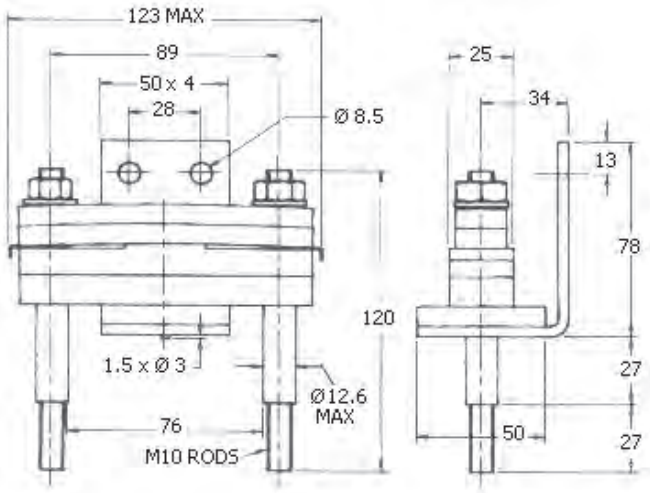

WC21 - XK2100DA076M/ML

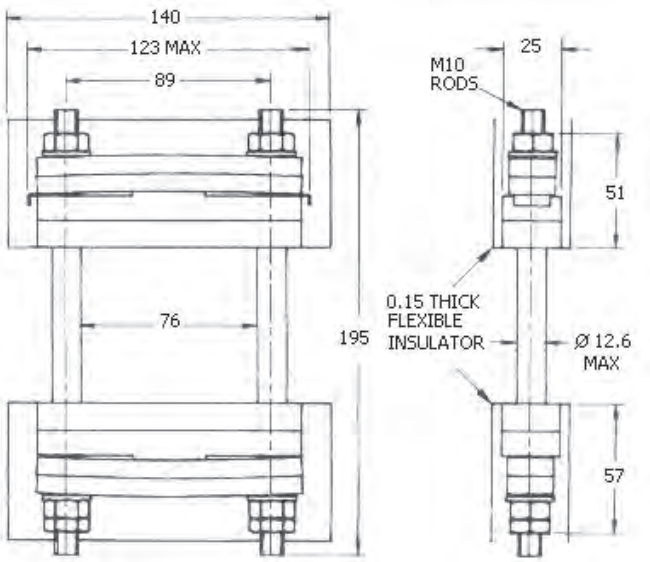

WC22 - XK2140SA076M/ML

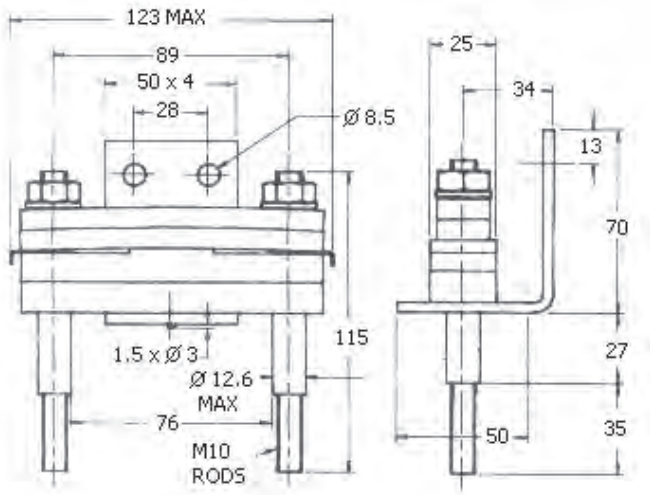

WC23 - XK2140DA076M/ML

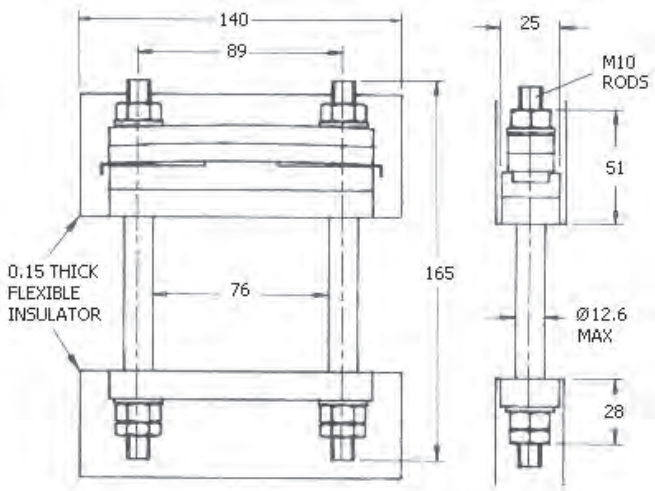

WC24 - XK2140DT076M/ML

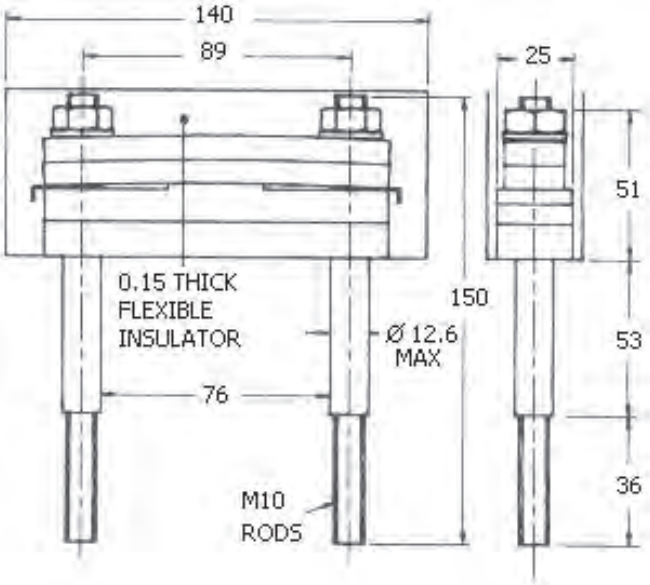

Outline drawings

Dimensions in mm and inches (1 mm = 0.0394“)

WC25 - XK2700SA076M

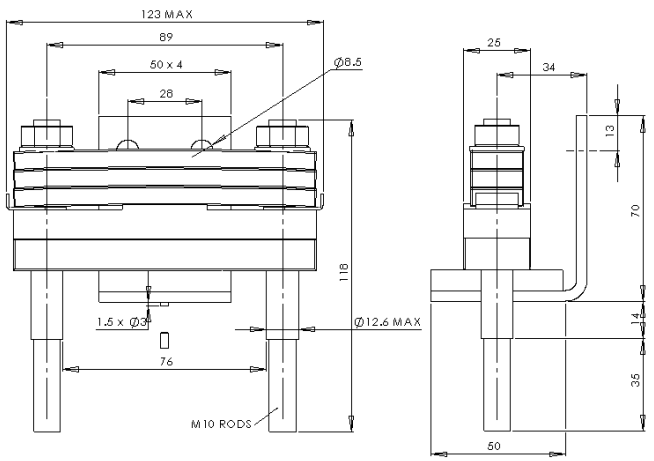

WC26 - XK2700DA076M

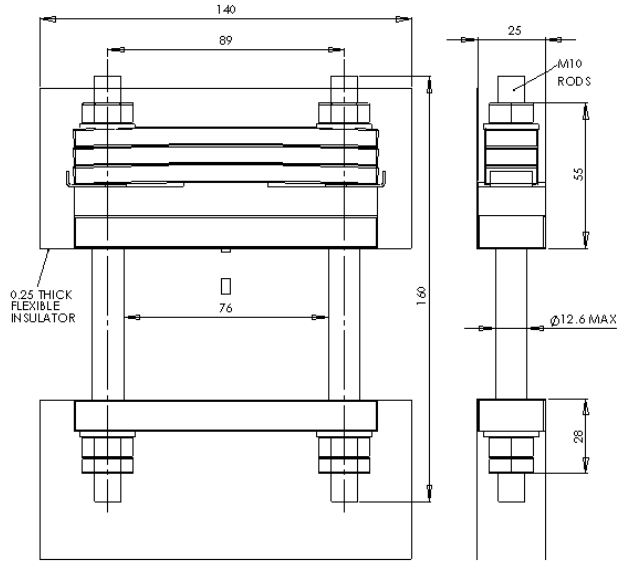

WC27 - XK2700DT076M

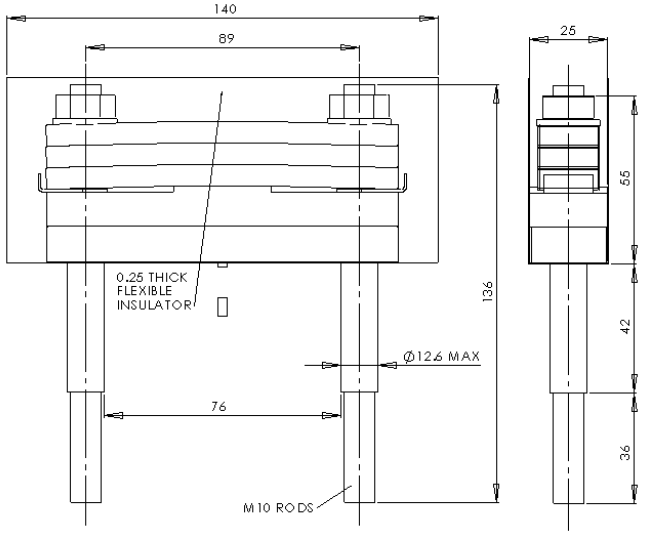

WC28 - XK2000SA114M

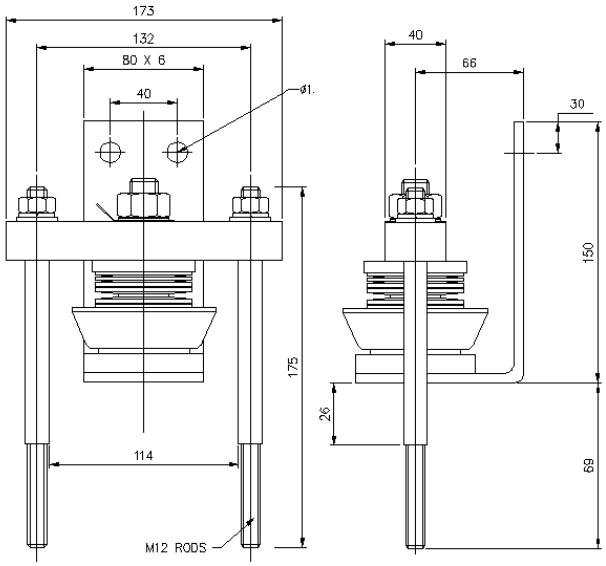

WC29 - XK2000DA114M

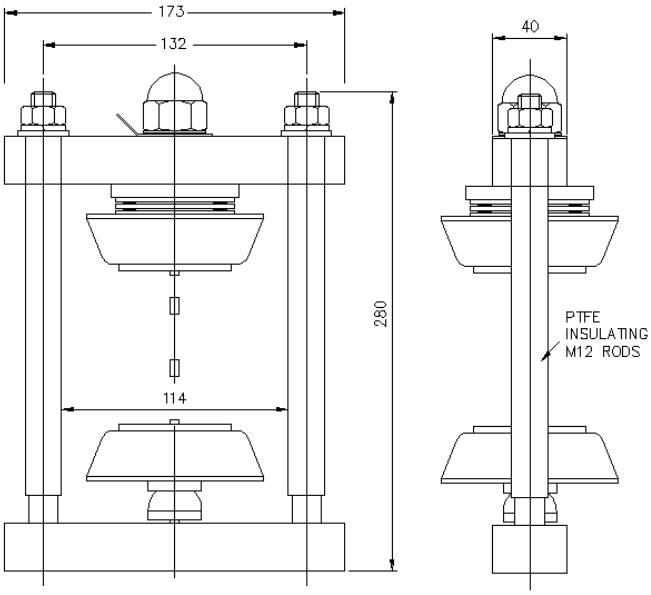

WC30 - XK2500SA114M

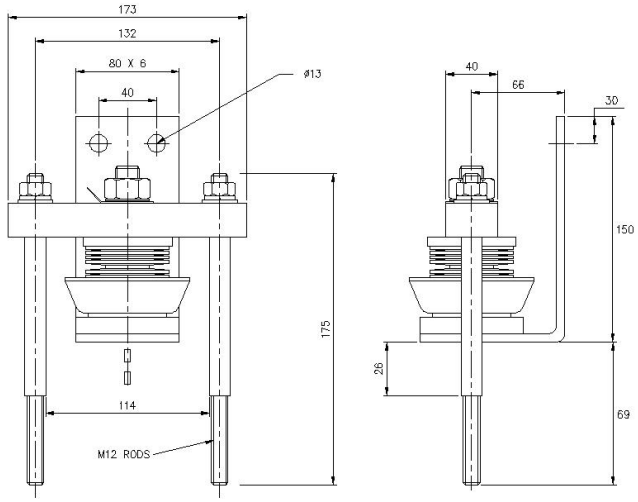

Outline drawings

Dimensions in mm and inches (1 mm = 0.0394“)

WC31 - XK2500DA114M

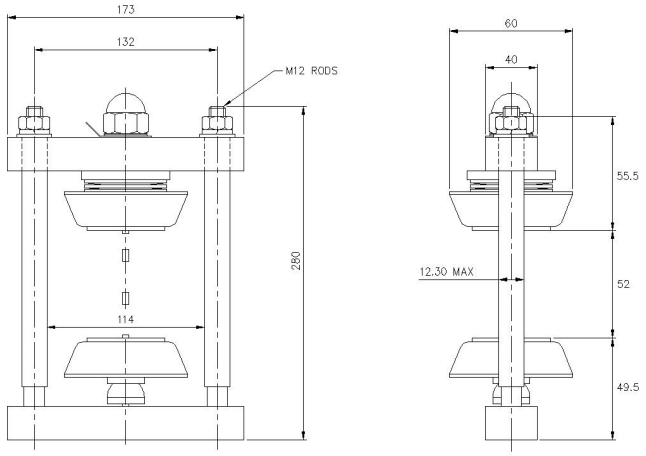

WC32 - XK2500SA116M/ML

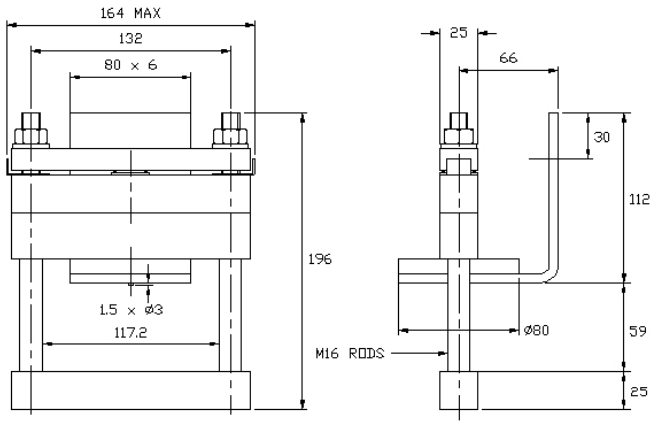

WC33 - XK2500DA116M/ML

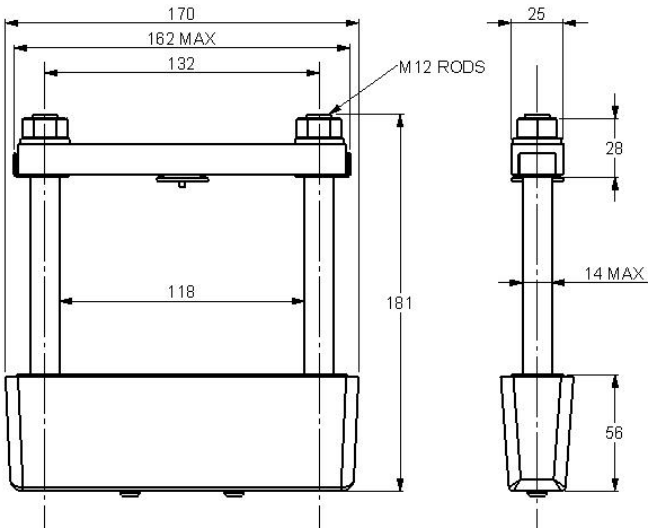

WC34 - XK3000SA116M/ML

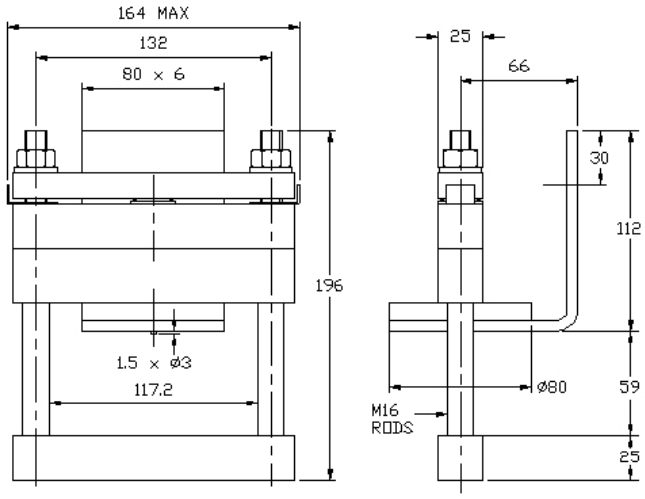

WC35 - XK3000DA116M/Mx

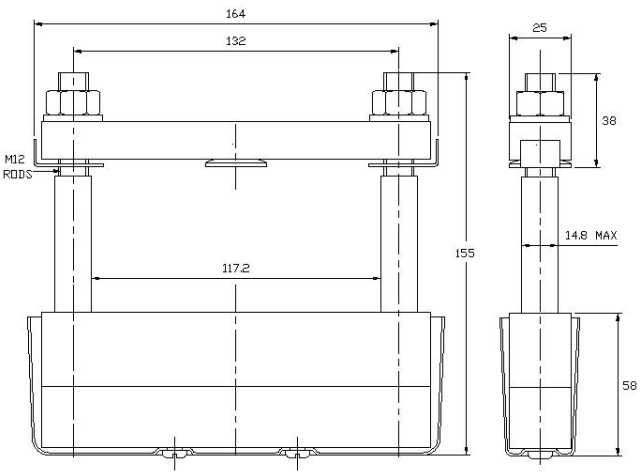

WC36 - XK3500SA116M/ML

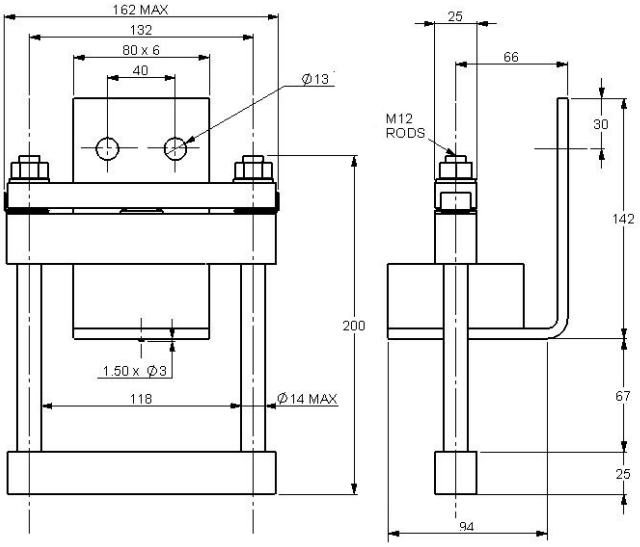

Outline drawings

Dimensions in mm and inches (1 mm = 0.0394“)

WC37 - XK3500DA116M/ML

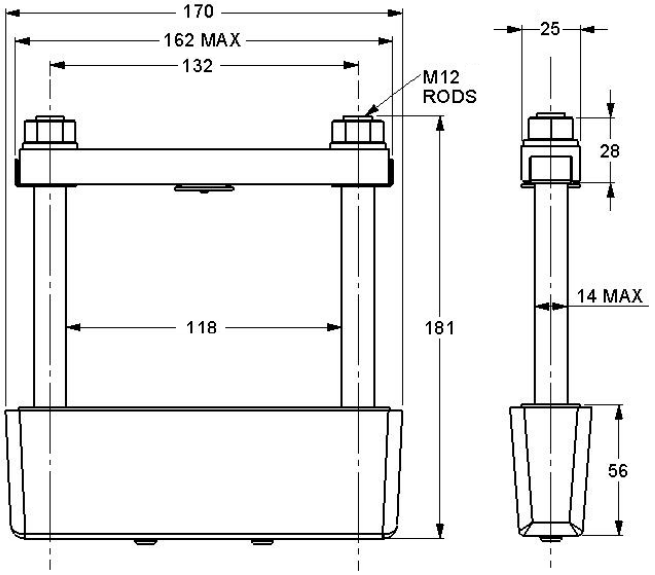

WC38 - XK4000SA116M/ML

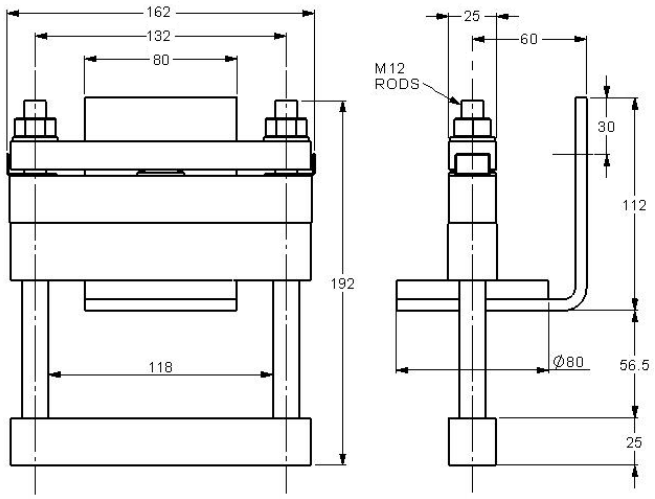

WC39 - XK4000DA116M/ML

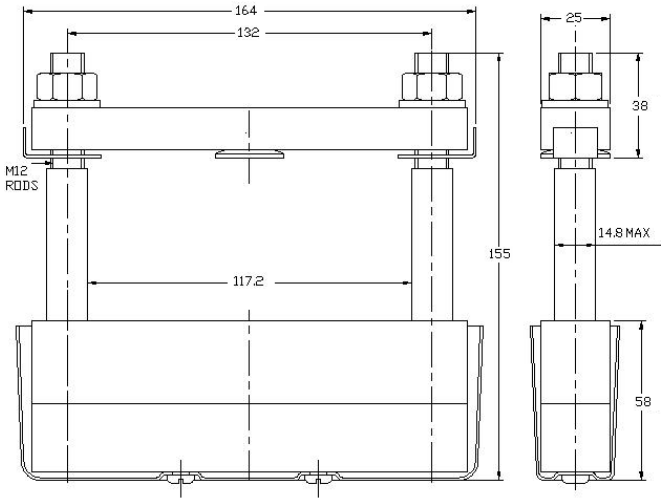

WC40 - XK5000DA128M/ML

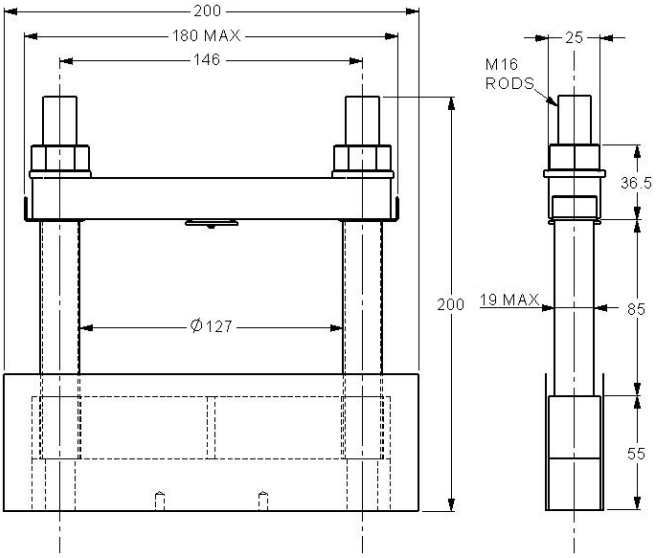

WC41 - XK7000DA128M/ML

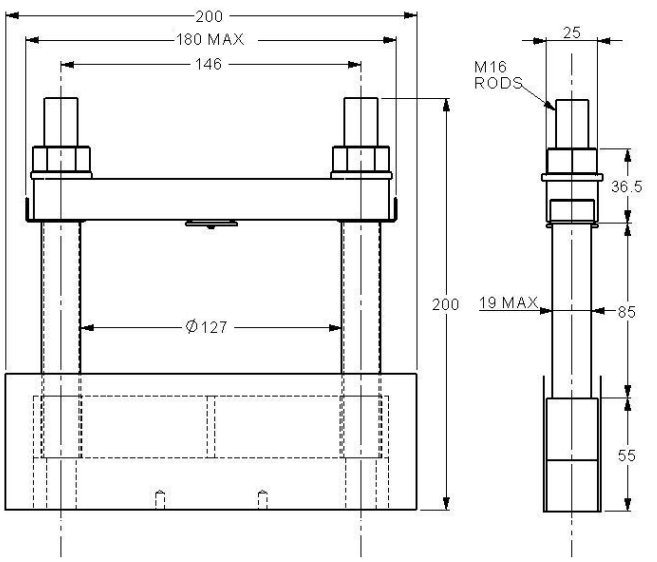

WC42 - XK3060SA140ML

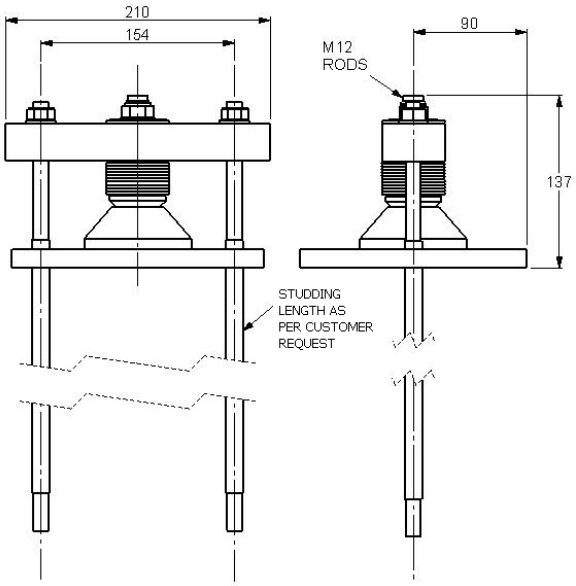

Outline drawings

Dimensions in mm and inches (1 mm = 0.0394“)

WC43 - XK3060DA140ML

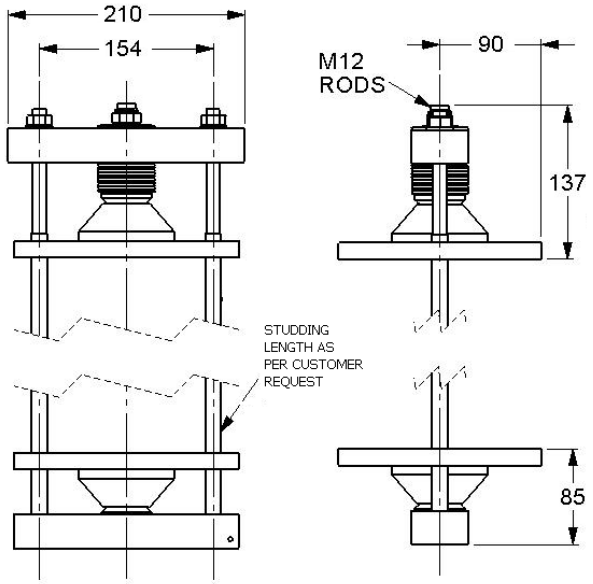

WC44 - XK9000SA160M/ML

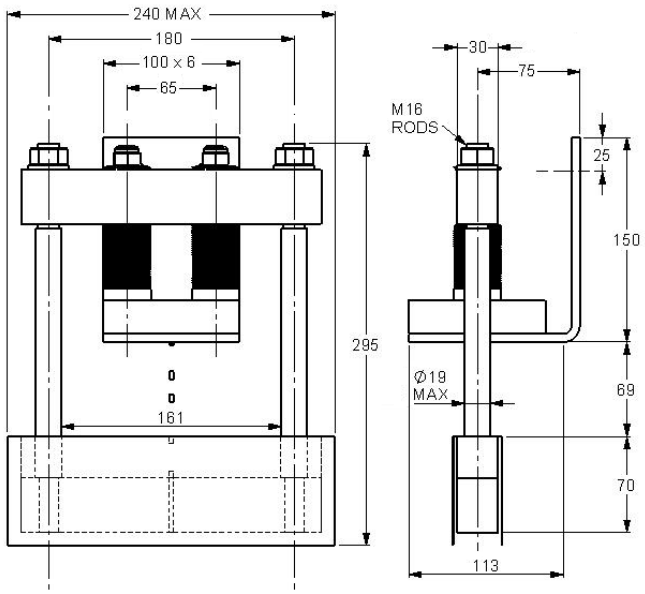

WC45 - XK9000DA160M/ML

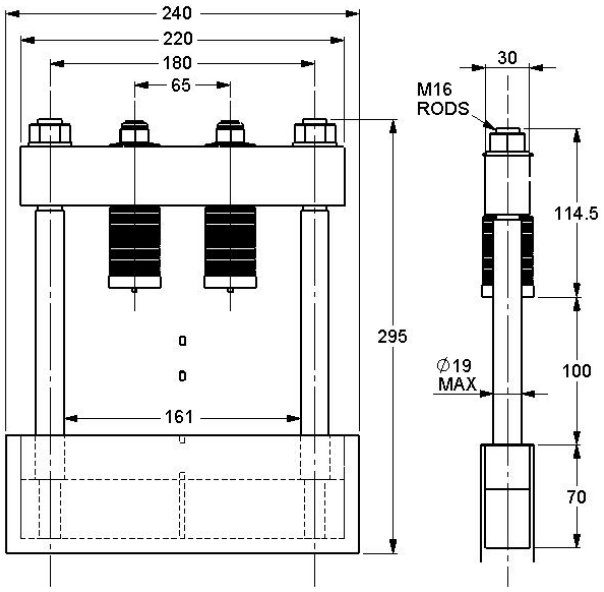

WC46 - XK6120DA180ML

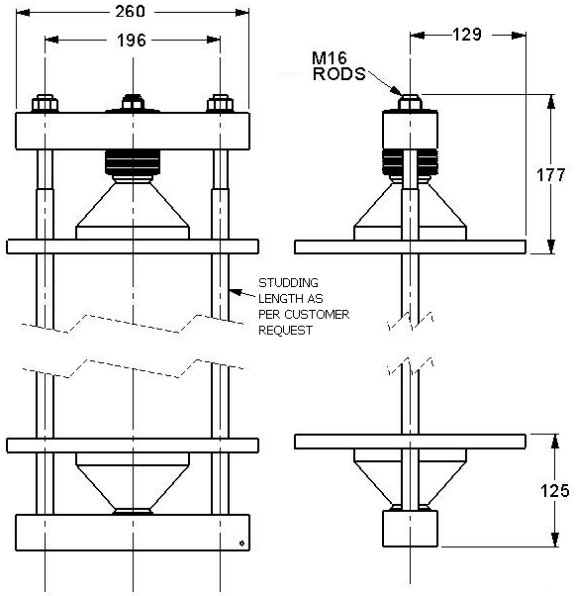

WC47 - XK6120SA180ML

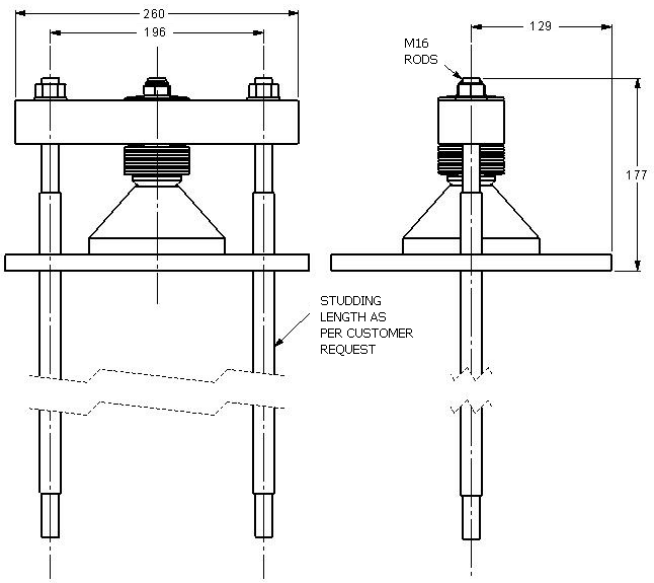

WC48 - XK0450xx019M

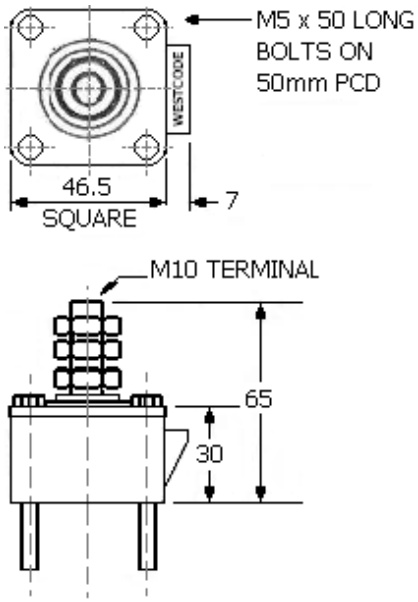

Outline drawings

Dimensions in mm and inches (1 mm = 0.0394“)

WC49 - XK####xx025M

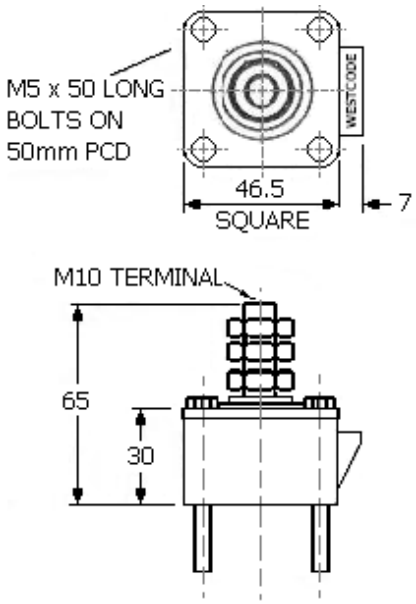

WC50 - XK1500BA034M

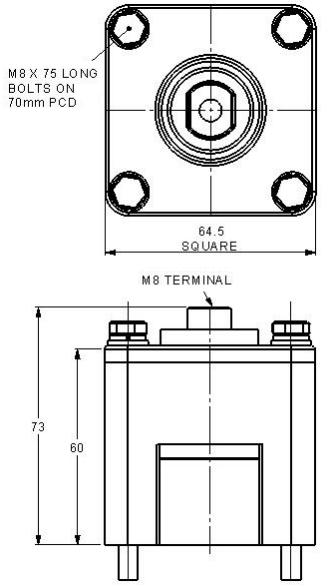

WC51 - XSK1500DA076xxx

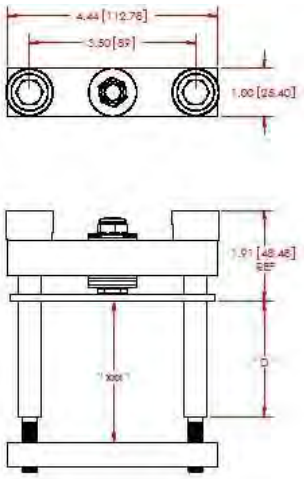

Notes:

1. DIMENSIONS IN INCHES [MILLIMETERS].
2. " Z " DIMENSION CAN BE CHANGED AS PER REQUIREMENT.
3. " D " DIMENSION CAN BE CHANGED AS PER REQUIREMENT.

WC52 - XSK2000DA076xxx

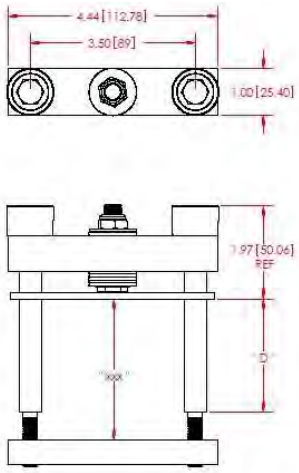

Notes:

1. DIMENSIONS IN INCHES [MILLIMETERS].
2. " Z " DIMENSION CAN BE CHANGED AS PER REQUIREMENT.
3. " D " DIMENSION CAN BE CHANGED AS PER REQUIREMENT.

WC53 - XSK3000DA076xxx

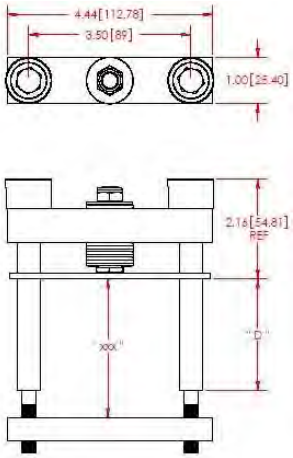

Notes:

1. DIMENSIONS IN INCHES [MILLIMETERS].
2. " Z " DIMENSION CAN BE CHANGED AS PER REQUIREMENT.
3. " D " DIMENSION CAN BE CHANGED AS PER REQUIREMENT.

WC54 - XSK3400DA076xxx

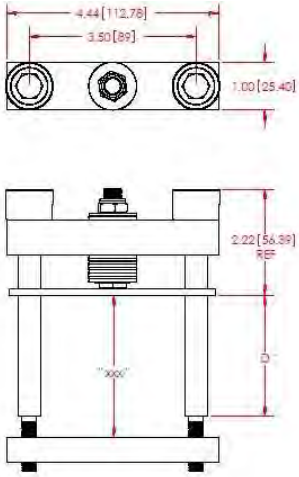

Notes:

1. DIMENSIONS IN INCHES [MILLIMETERS].
2. " Z " DIMENSION CAN BE CHANGED AS PER REQUIREMENT.
3. " D " DIMENSION CAN BE CHANGED AS PER REQUIREMENT.

Outline drawings

Dimensions in mm and inches (1 mm = 0.0394“)

WC55 - SK3800DA116Mxxx

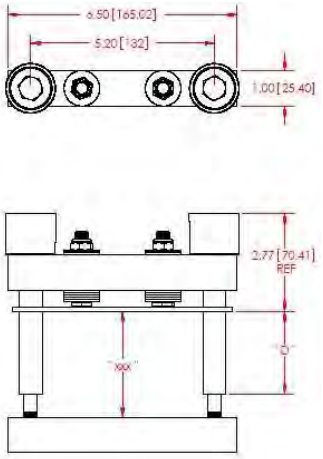

Notes:

1. DIMENSIONS IN INCHES [MILLIMETERS].
2. " Z " DIMENSION CAN BE CHANGED AS PER REQUIREMENT.
3. " D " DIMENSION CAN BE CHANGED AS PER REQUIREMENT.

WC56 - XSK4400DA116Mxxx

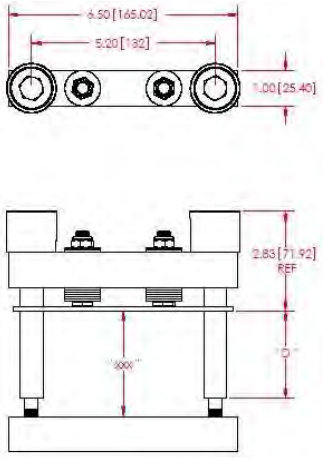

Notes:

1. DIMENSIONS IN INCHES [MILLIMETERS].
2. " Z " DIMENSION CAN BE CHANGED AS PER REQUIREMENT.
3. " D " DIMENSION CAN BE CHANGED AS PER REQUIREMENT.

WC57 - XSK6000DA116Mxxx

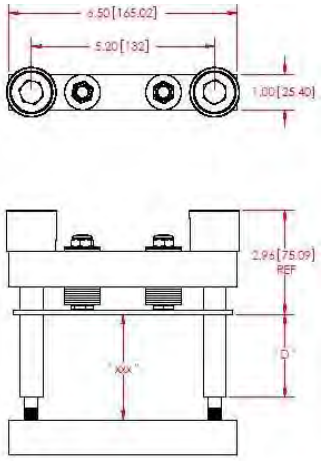

Notes:

1. DIMENSIONS IN INCHES [MILLIMETERS].
2. " Z " DIMENSION CAN BE CHANGED AS PER REQUIREMENT.
3. " D " DIMENSION CAN BE CHANGED AS PER REQUIREMENT.

WC58- DA

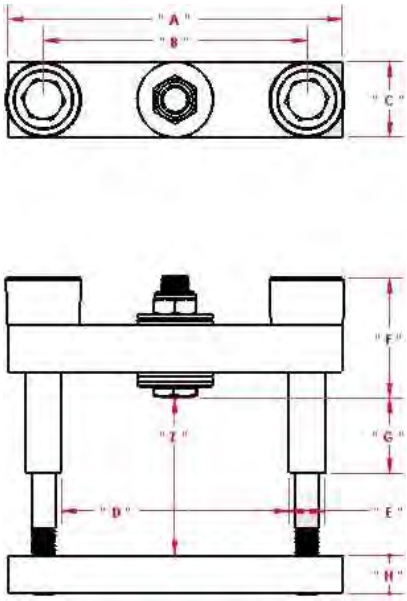

WC59 - DT

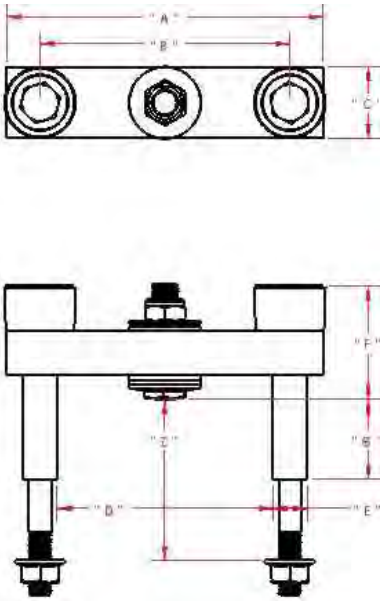

WC60 - DF

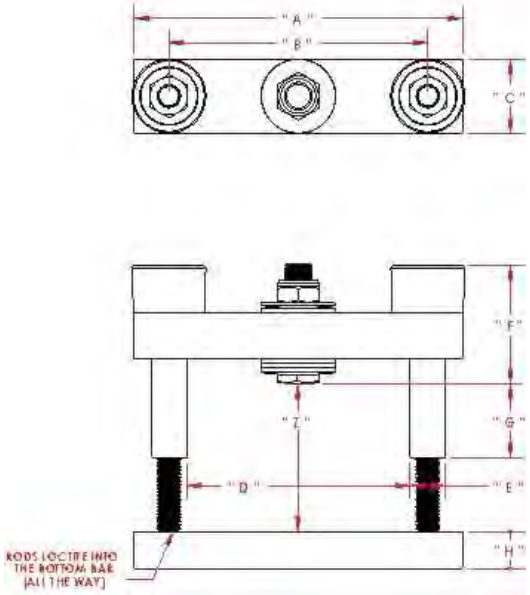

Outline drawings

Dimensions in mm and inches (1 mm = 0.0394“)

WC61 - DA

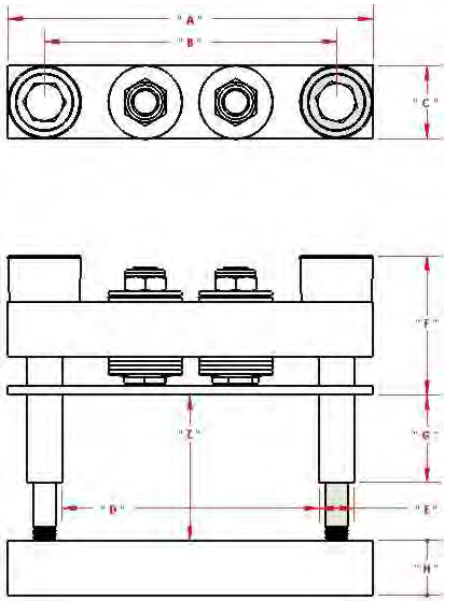

WC62 - DT

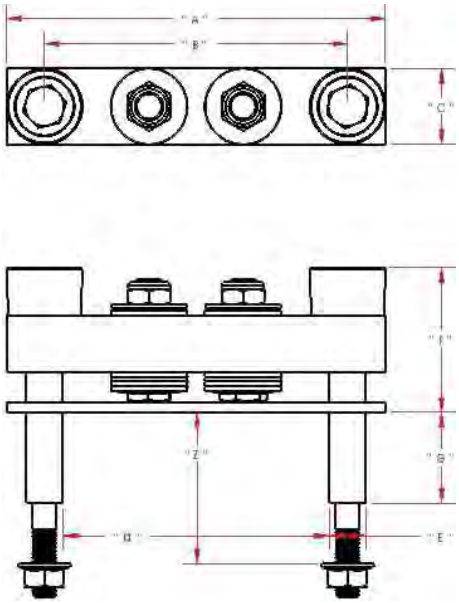

WC63 - DF

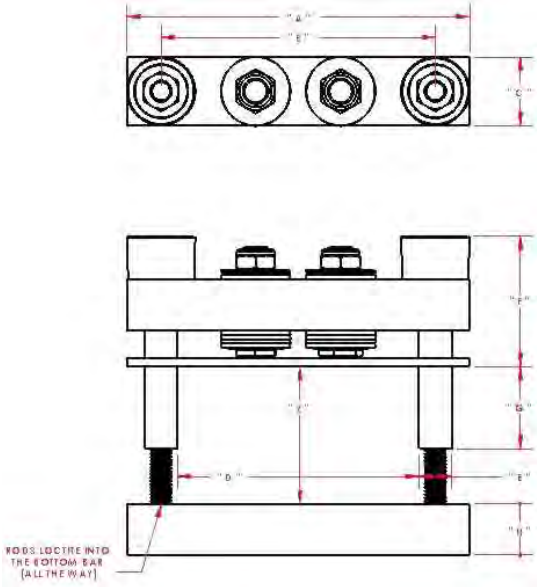

WC64 - XK1500CB034M

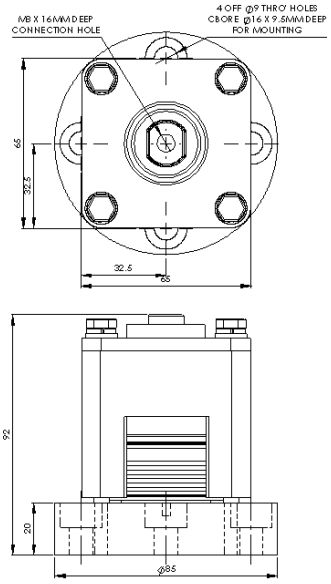

WC65 - XK1130SB076M

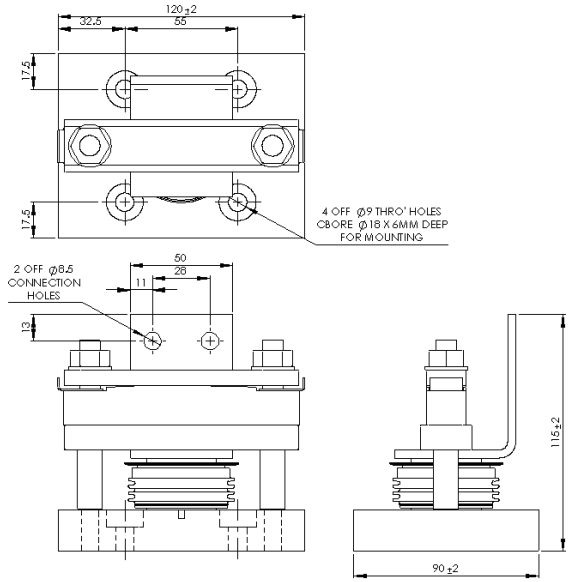

WC66 - XK2140SB076M

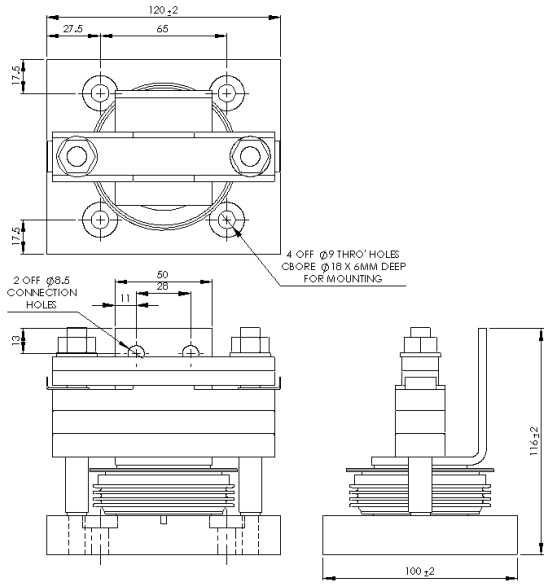

Outline drawings

Dimensions in mm and inches (1 mm = 0.0394“)

WH1 - G FIN

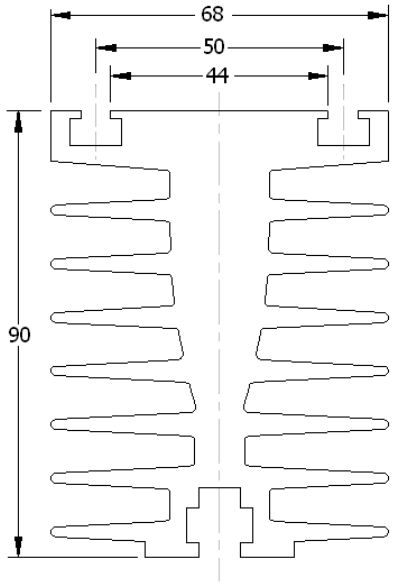

WH2 - GA FIN

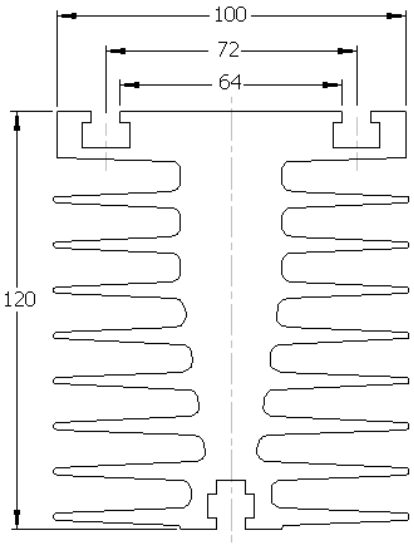

WH3 - H FIN

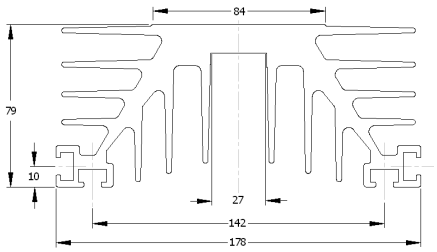

WH4 - T FIN

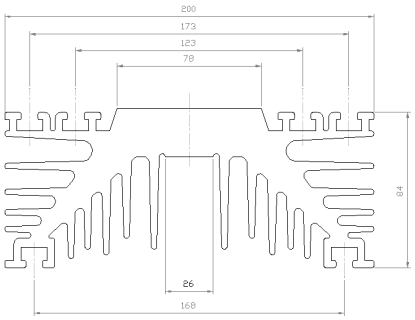

WH5 - TB FIN

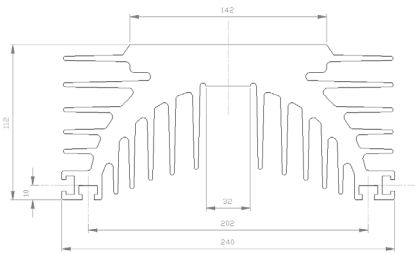

WH6 - TC FIN

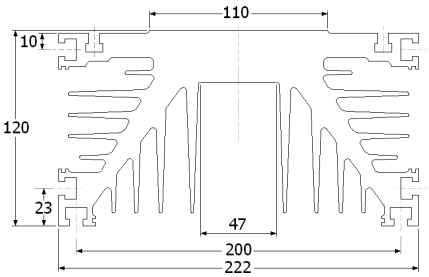

WH7 - LP100

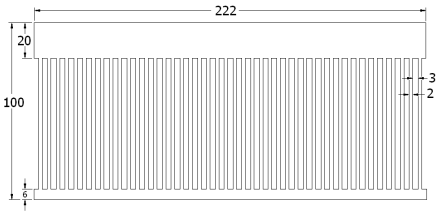

WH8 - WS46

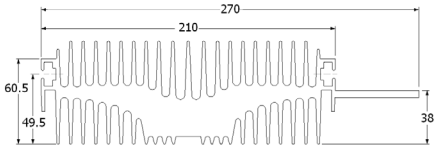

WH9 - WS30 - COPPER

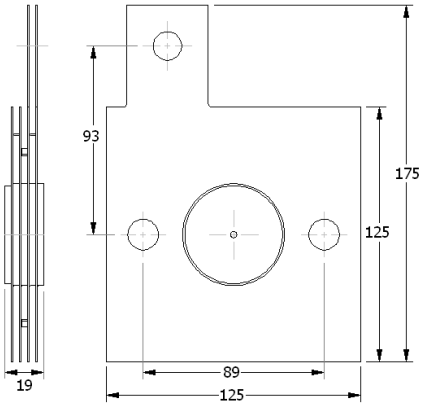

Outline drawings

Dimensions in mm and inches (1 mm = 0.0394“)

WCL1 - LK COOLER

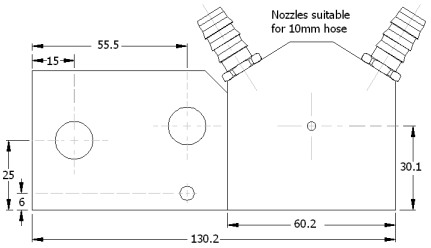

WCL2 - LKA COOLER

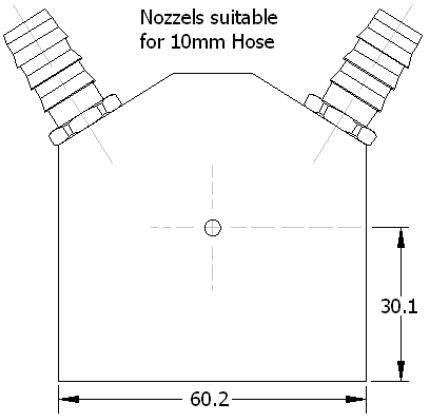

WCL3 - LKB COOLER

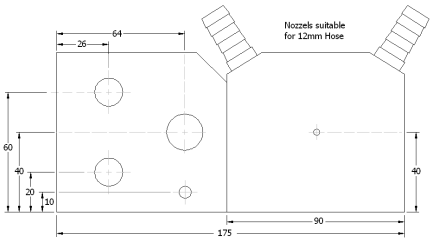

WCL4 - LKC COOLER

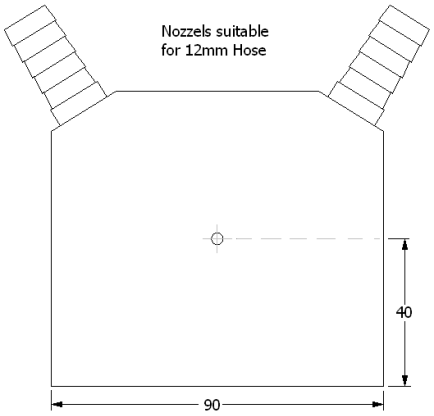

WCL5 - LKD COOLER

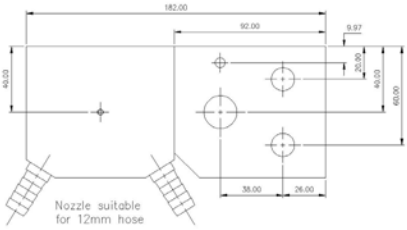

WCL6 - LKE COOLER

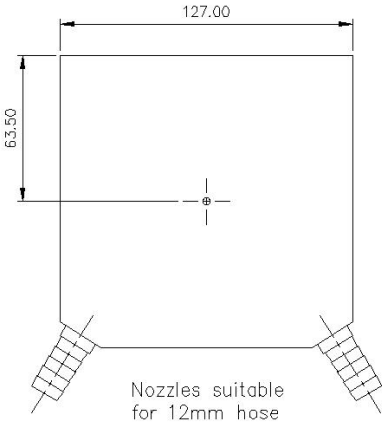

WCL7 - LKF

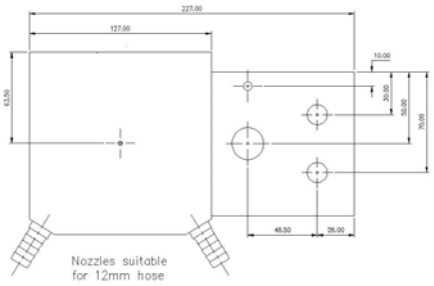

WCL8 - WS27

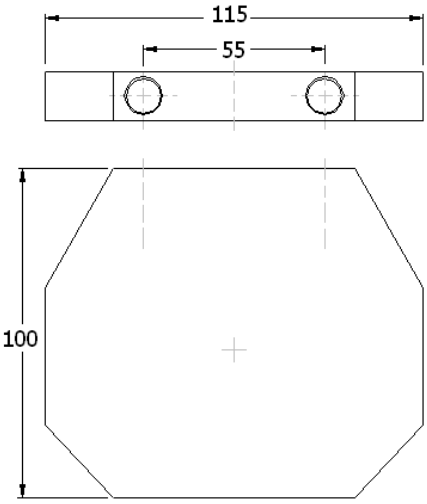

WCL9 - WS65 COOLER

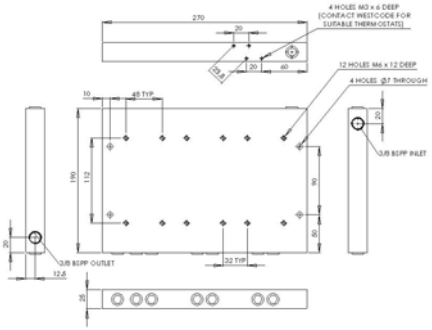

Outline drawings

Dimensions in mm and inches (1 mm = 0.0394“)

WCL10 - WS69 COOLER

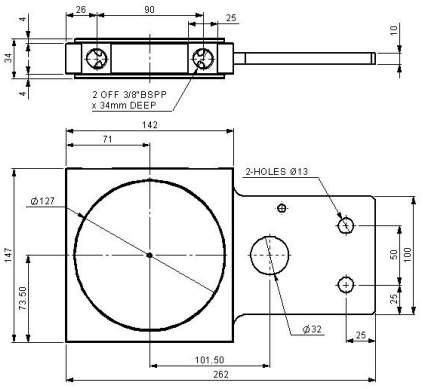

WCL11 - WS70 COOLER

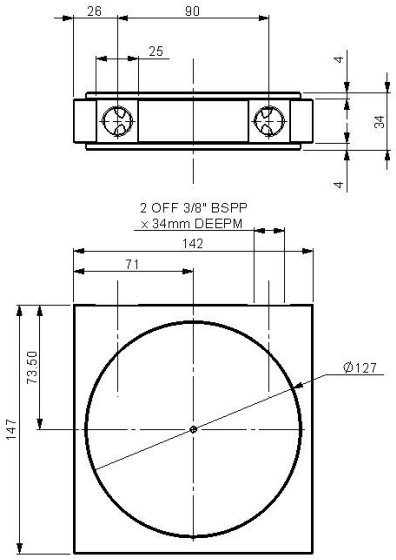

WCL12 - WS71-1 COOLER

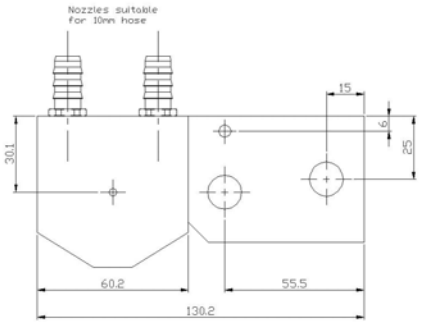

WCL13 - WS71-2 COOLER

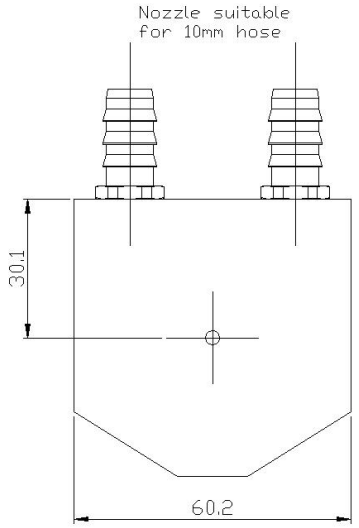

WCL14 - WS72-1 COOLER

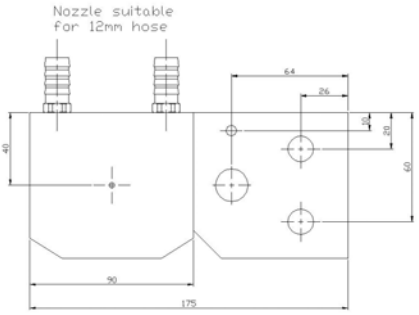

WCL15 - WS72-2 COOLER

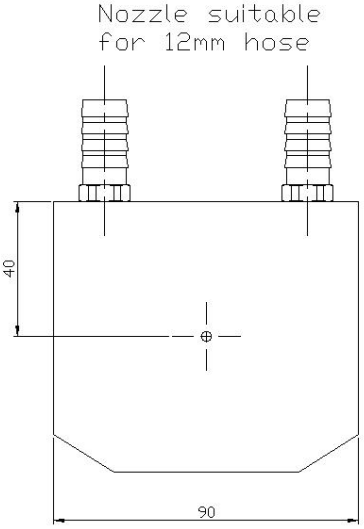

WCL16 - XW127ExxxA

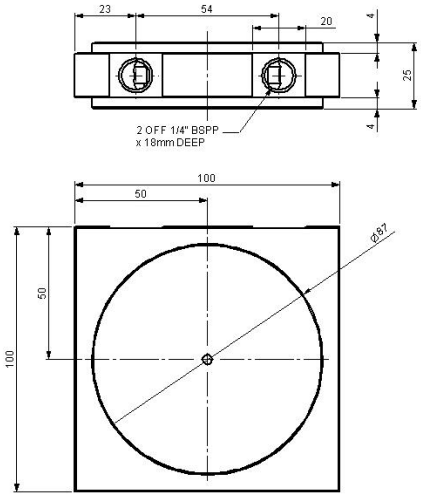

WCL17 - XW127ExxxB

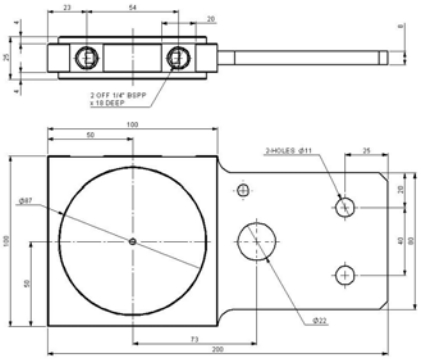

WCL18 - XW180GN25A

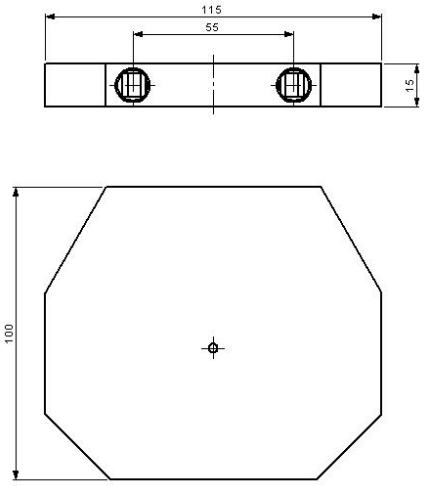

Outline drawings

Dimensions in mm and inches (1 mm = 0.0394“)

X003 TO-251 AA — Weight = 0.4 g

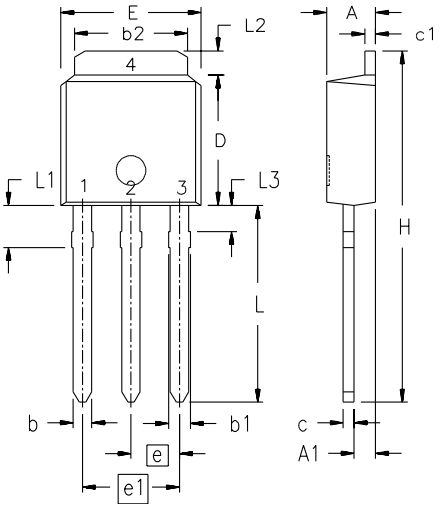

Dim.	Millimeters min	Millimeters max	Inches min	Inches max
A	2.19	2.38	0.086	0.094
A1	0.89	1.14	0.035	0.045
b	0.64	0.89	0.025	0.035
b1	0.76	1.14	0.030	0.045
b2	5.21	5.46	0.205	0.215
c	0.46	0.58	0.018	0.023
c1	0.46	0.58	0.018	0.023
D	5.97	6.22	0.235	0.245
E	6.35	6.73	0.250	0.265
e	2.28 BSC		0.090 BSC	
e1	4.57 BSC		0.180 BSC	
H	17.02	17.78	0.670	0.700
L	8.89	9.65	0.350	0.380
L1	1.91	2.28	0.075	0.090
L2	0.89	1.27	0.035	0.050
L3	1.15	1.52	0.045	0.060

X004 TO-252 AA (D PAK) — Weight = 0.3 g

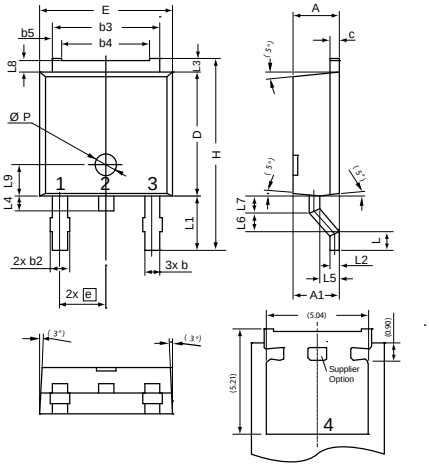

Dim.	Millimeters min	Millimeters max	Inches min	Inches max
A	2.20	2.40	0.087	0.094
A1	2.10	2.50	0.083	0.098
b	0.66	0.86	0.026	0.034
b2	-	0.96	-	0.038
b3	5.04	5.64	0.198	0.222
b4	4.34 BSC		0.171 BSC	
b5	0.50 BSC		0.020 BSC	
c	0.40	0.60	0.016	0.024
D	5.90	6.30	0.232	0.248
E	6.40	6.80	0.252	0.268
e	2.10	2.50	0.083	0.098
H	9.20	9.80	0.362	0.386
L	0.55	1.02	0.022	0.040
L1	2.50	2.90	0.098	0.114
L2	0.40	0.60	0.016	0.024
L3	0.50	0.90	0.020	0.035
L4	0.60	1.00	0.024	0.039
L5	0.82	1.22	0.032	0.048
L6	0.79	0.99	0.031	0.039
L7	0.81	1.01	0.032	0.040
L8	0.40	0.80	0.016	0.031
L9	1.50 BSC		0.059 BSC	
Ø P	1.00 BSC		0.039 BSC	

X004a TO-252 AA (D PAK HV) — Weight = 0.3 g

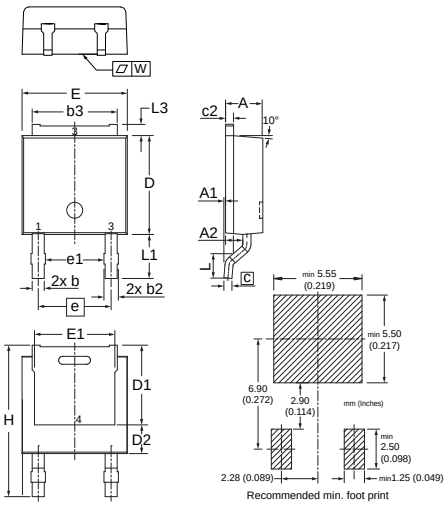

Dim.	Millimeters min	Millimeters max	Inches min	Inches max
A	2.18	2.39	0.086	0.094
A1	0.00	0.13	0.000	0.005
A2	0.97	1.17	0.038	0.046
b	0.64	0.89	0.025	0.035
b2	0.76	1.14	0.030	0.045
b3	5.08	5.59	0.200	0.220
c	0.46	0.61	0.018	0.024
c2	0.46	0.58	0.018	0.023
D	5.97	6.22	0.235	0.245
D1	4.57	5.21	0.180	0.205
D2	2.03		0.080	
E	6.35	6.73	0.250	0.265
E1	4.32	5.21	0.170	0.205
e	4.57		0.180	
e1	3.62		0.143	
H	9.15	10.34	0.360	0.407
L	1.40	1.78	0.055	0.070
L1	2.54	2.92	0.100	0.115
L3	0.64	1.02	0.025	0.040
W	typ. 0.02	0.040	typ. 0.0008	0.000

X005a TO-220 AB — Weight = 2 g

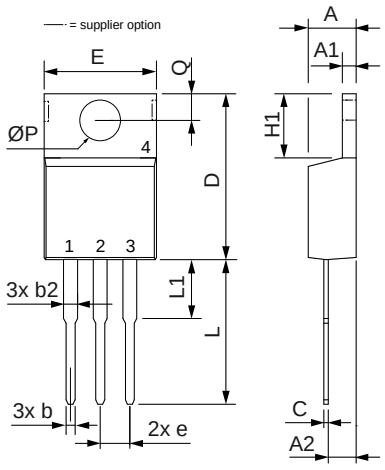

Dim.	Millimeters min	Millimeters max	Inches min	Inches max
A	4.32	4.82	0.170	0.190
A1	1.14	1.39	0.045	0.055
A2	2.29	2.79	0.090	0.110
b	0.64	1.01	0.025	0.040
b2	1.15	1.65	0.045	0.065
C	0.35	0.56	0.014	0.022
D	14.73	16.00	0.580	0.630
E	9.91	10.66	0.390	0.420
e	2.54 BSC		0.100 BSC	
H1	5.85	6.85	0.230	0.270
L	12.70	13.97	0.500	0.550
L1	2.79	5.84	0.110	0.230
Ø P	3.54	4.08	0.139	0.161
Q	2.54	3.18	0.100	0.125

X005b TO-220 AC — Weight = 2 g

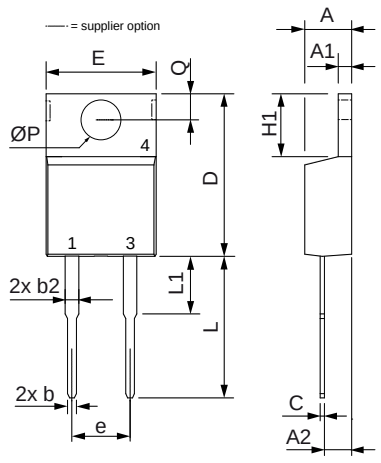

Dim.	Millimeters min	Millimeters max	Inches min	Inches max
A	4.32	4.82	0.170	0.190
A1	1.14	1.39	0.045	0.055
A2	2.29	2.79	0.090	0.110
b	0.64	1.01	0.025	0.040
b2	1.15	1.65	0.045	0.065
C	0.35	0.56	0.014	0.022
D	14.73	16.00	0.580	0.630
E	9.91	10.66	0.390	0.420
e	5.08 BSC		0.200 BSC	
H1	5.85	6.85	0.230	0.270
L	12.70	13.97	0.500	0.550
L1	2.79	5.84	0.110	0.230
Ø P	3.54	4.08	0.139	0.161
Q	2.54	3.18	0.100	0.125

X006 TO-220 (5) — Weight = 2 g

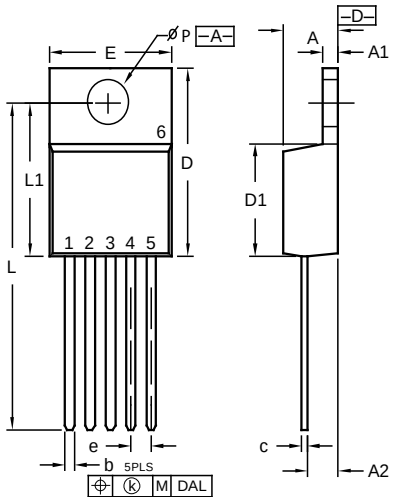

Dim.	Millimeters min	Millimeters max	Inches min	Inches max
A	4.32	4.82	0.170	0.190
A1	1.14	1.39	0.045	0.055
A2	2.29	2.79	0.090	0.110
b	0.64	1.01	0.025	0.040
c	0.38	0.64	0.015	0.025
D	14.73	15.75	0.580	0.620
D1	8.64	9.40	0.340	0.370
E	9.91	10.54	0.390	0.415
e	1.70 BSC		0.067 BSC	
k	0.00	0.36	0.000	0.014
L	25.27	26.54	0.995	1.045
L1	11.94	12.95	0.470	0.510
Ø P	3.53	3.96	0.139	0.156

Outline drawings

Dimensions in mm and inches (1 mm = 0.0394“)

X007a TO-220 ABFP

Weight = 2 g

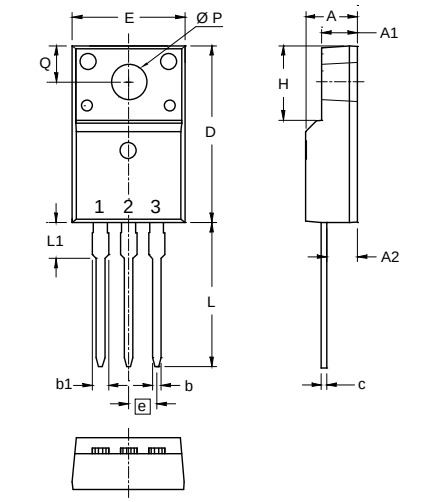

Dim.	Millimeters		Inches	
	min	max	min	max
A	4.50	4.90	0.177	0.193
A1	2.34	2.74	0.092	0.108
A2	2.56	2.96	0.101	0.117
b	0.70	0.90	0.028	0.035
b1	1.27	1.47	0.050	0.058
c	0.45	0.60	0.018	0.024
D	15.67	16.07	0.617	0.633
E	9.96	10.36	0.392	0.408
e	2.54 BSC		0.100 BSC	
H	6.48	6.88	0.255	0.271
L	12.68	13.28	0.499	0.523
L1	3.03	3.43	0.119	0.135
Ø P	3.08	3.28	0.121	0.129
Q	3.20	3.40	0.126	0.134

X007b TO-220 ACFP

Weight = 2 g

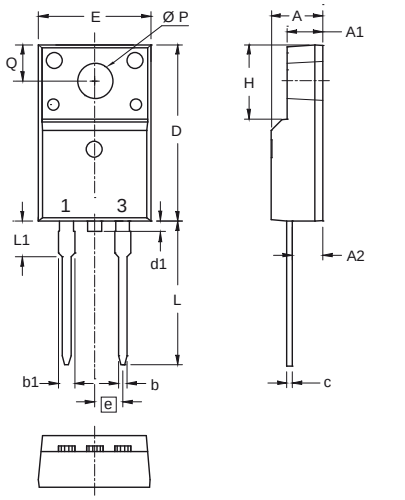

Dim.	Millimeters		Inches	
	min	max	min	max
A	4.50	4.90	0.177	0.193
A1	2.34	2.74	0.092	0.108
A2	2.56	2.96	0.101	0.117
b	0.70	0.90	0.028	0.035
b1	1.27	1.47	0.050	0.058
c	0.45	0.60	0.018	0.024
D	15.67	16.07	0.617	0.633
d1	0.00	1.10	0.000	0.043
E	9.96	10.36	0.392	0.408
e	2.54 BSC		0.100 BSC	
H	6.48	6.88	0.255	0.271
L	12.68	13.28	0.499	0.523
L1	3.03	3.43	0.119	0.135
Ø P	3.08	3.28	0.121	0.129
Q	3.20	3.40	0.126	0.134

X008a TO-262 I²PAK

Weight = 1.5 g

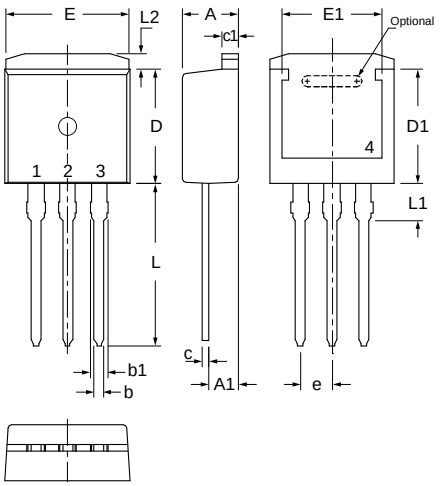

Dim.	Millimeters		Inches	
	min	max	min	max
A	4.30	4.70	0.169	0.185
A1	2.20	2.60	0.087	0.102
b	0.70	0.90	0.028	0.035
b1	1.37	1.57	0.054	0.062
c	0.45	0.60	0.018	0.024
c1	1.25	1.40	0.049	0.055
D	9.00	9.40	0.355	0.370
D1	7.20		0.284	
E	9.70	9.90	0.382	0.390
E1	7.00		0.276	
e	2.54 BSC		0.100 BSC	
L	12.88	13.28	0.507	0.523
L1	3.00	-	0.118	-
L2	1.00	1.40	0.039	0.055

X008b TO-262 I²PAK

Weight = 1.5 g

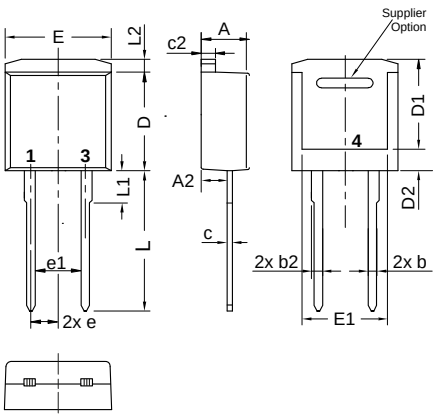

Dim.	Millimeters		Inches	
	min	max	min	max
A	4.06	4.83	0.160	0.190
A2	2.41		0.095	
b	0.51	0.99	0.020	0.039
b2	1.14	1.40	0.045	0.055
c	0.40	0.74	0.016	0.029
c2	1.14	1.40	0.045	0.055
D	8.38	9.40	0.330	0.370
D1	8.00	8.89	0.315	0.350
D2	2.5		0.098	
E	9.65	10.41	0.380	0.410
E1	6.22	8.50	0.245	0.335
e	2.54 BSC		0.100 BSC	
e1	4.28		0.169	
L	13.00	13.60	0.512	0.535
L1	2.90	3.10	0.114	0.122
L2	1.02	1.68	0.040	0.066

X009a PLUS220™

Weight = 2.5 g

b) middle leg cut

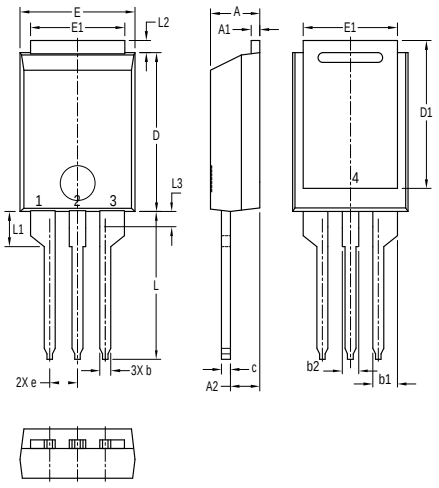

Dim.	Millimeters		Inches	
	min	max	min	max
A	4.30	4.70	0.169	0.185
A1	0.70	0.90	0.028	0.035
A2	2.50	3.00	0.098	0.118
b	0.90	1.20	0.035	0.047
b1	2.03	2.41	0.080	0.095
b2	1.37	1.63	0.054	0.064
c	0.70	0.90	0.028	0.035
D	14.00	15.00	0.551	0.591
D1	13.00	13.70	0.512	0.539
E	10.00	11.00	0.394	0.433
E1	8.40	8.80	0.331	0.346
e	2.54 BSC		0.100 BSC	
L	13.00	14.00	0.512	0.551
L1	3.00	3.50	0.118	0.138
L2	0.90	1.30	0.035	0.051
L3	1.20	1.50	0.047	0.059

X010a ISOPLUS220™ AB

Weight = 2.5 g

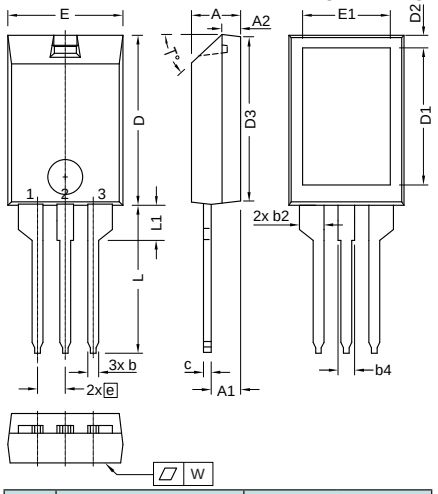

Dim.	Millimeters		Inches	
	min	max	min	max
A	4.00	5.00	0.157	0.197
A1	2.50	3.00	0.098	0.118
A2	1.60	1.80	0.063	0.071
b	0.90	1.30	0.035	0.051
b2	2.35	2.55	0.093	0.100
b4	1.25	1.65	0.049	0.065
c	0.70	1.00	0.028	0.039
D	15.00	16.00	0.591	0.630
D1	12.00	13.00	0.472	0.512
D2	1.10	1.50	0.043	0.059
D3	14.90	15.50	0.587	0.610
E	10.00	11.00	0.394	0.433
E1	7.50	8.50	0.295	0.335
e	2.54 BSC		0.100 BSC	
L	13.00	14.50	0.512	0.571
L1	3.00	3.50	0.118	0.138
T°	42.5	47.5		
W	-	0.10	-	0.004

Outline drawings

IXYS

Dimensions in mm and inches (1 mm = 0.0394“)

X010b ISOPLUS220™ AC Weight = 2.5 g

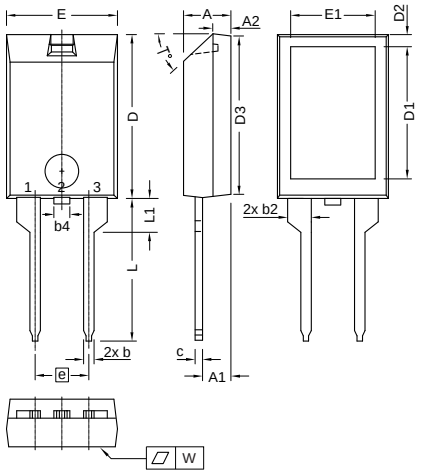

Dim.	Millimeters min	Millimeters max	Inches min	Inches max
A	4.00	5.00	0.157	0.197
A1	2.50	3.00	0.098	0.118
A2	1.60	1.80	0.063	0.071
b	0.90	1.30	0.035	0.051
b2	1.25	1.65	0.049	0.065
b4	2.35	2.55	0.093	0.100
c	0.70	1.00	0.028	0.039
D	15.00	16.00	0.591	0.630
D1	12.00	13.00	0.472	0.512
D2	1.10	1.50	0.043	0.059
D3	14.90	15.50	0.587	0.610
E	10.00	11.00	0.394	0.433
E1	7.50	8.50	0.295	0.335
e	5.08 BSC		0.200 BSC	
L	13.00	14.50	0.512	0.571
L1	3.00	3.50	0.118	0.138
T°	42.5	47.5		
W	-	0.10	-	0.004

X011a TO-263 AA (D²PAK) Weight = 1.5 g

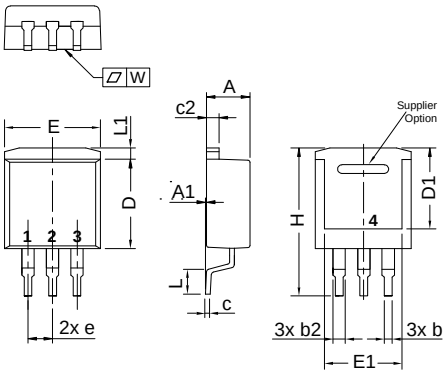

Dim.	Millimeter min	Millimeter max	Inches min	Inches max
A	4.06	4.83	0.160	0.190
A1	typ. 0.10		typ. 0.004	
b	0.51	0.99	0.020	0.039
b2	1.14	1.40	0.045	0.055
c	0.40	0.74	0.016	0.029
c2	1.14	1.40	0.045	0.055
D	8.38	9.40	0.330	0.370
D1	8.00	8.89	0.315	0.350
E	9.65	10.41	0.380	0.410
E1	6.22	8.13	0.245	0.320
e	2,54 BSC		0,100 BSC	
H	14.61	15.88	0.575	0.625
L	1.78	2.79	0.070	0.110
L1	1.02	1.68	0.040	0.066
W	typ. 0.02	0.040	typ. 0.0008	0.002

X011b TO-263 AB (D²PAK) Weight = 1.5 g

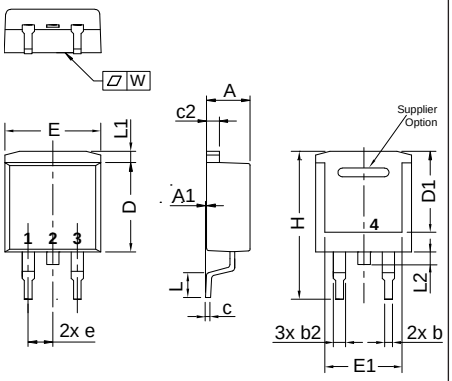

Dim.	Millimeter min	Millimeter max	Inches min	Inches max
A	4.06	4.83	0.160	0.190
A1	typ. 0.10		typ. 0.004	
b	0.51	0.99	0.020	0.039
b2	1.14	1.40	0.045	0.055
c	0.40	0.74	0.016	0.029
c2	1.14	1.40	0.045	0.055
D	8.38	9.40	0.330	0.370
D1	8.00	8.89	0.315	0.350
E	9.65	10.41	0.380	0.410
E1	6.22	8.13	0.245	0.320
e	2,54 BSC		0,100 BSC	
H	14.61	15.88	0.575	0.625
L	1.78	2.79	0.070	0.110
L1	1.02	1.68	0.040	0.066
W	typ. 0.02	0.040	typ. 0.0008	0.002

X011c TO-263 AB (D²PAK) Weight = ?? g

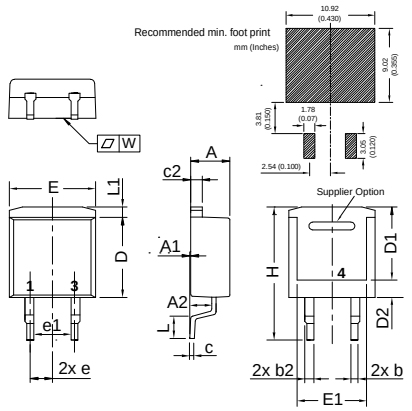

Dim.	Millimeters min	Millimeters max	Inches min	Inches max
A	4.06	4.83	0.160	0.190
A1	typ 0.10		typ 0.004	
A2	2.41		0.095	
b	0.51	0.99	0.020	0.039
b2	1.14	1.40	0.045	0.055
c	0.40	0.74	0.016	0.029
c2	1.14	1.40	0.045	0.055
D	8.38	9.40	0.330	0.370
D1	8.00	8.89	0.315	0.350
D2	2.5		0.098	
E	9.65	10.41	0.380	0.410
E1	6.22	8.50	0.245	0.335
e	2.54 BSC		0.100 BSC	
e1	4.28		0.169	
H	14.61	15.88	0.575	0.625
L	1.78	2.79	0.070	0.110
L2	1.02	1.68	0.040	0.066
W	typ 0.02	0.040	typ 0.0008	0.002

X012a TO-263 (5) Weight = 1.5 g

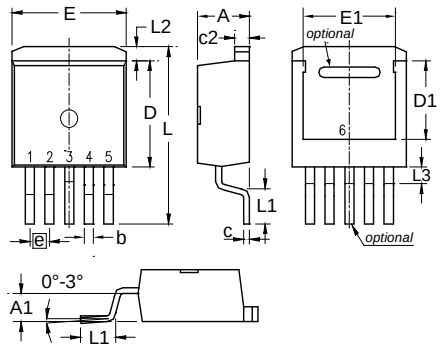

Dim.	Millimeter min	Millimeter max	Inches min	Inches max
A	4.20	4.80	0.160	0.190
A1	2.10	2.70	0.083	0.106
b	0.60	0.99	0.024	0.039
c	0.40	0.70	0.016	0.028
c2	1.20	1.40	0.047	0.055
D	8.80	9.50	0.346	0.374
D1	6.60	7.20	0.260	0.283
E	9.65	10.30	0.380	0.406
E1	7.50	8.20	0.295	0.323
e	1.70 BSC		0.067 BSC	
L	14.80	15.80	0.583	0.622
L1	2.24	2.84	0.088	0.112
L2	1.00	1.40	0.039	0.067
L3	1.20	1.70	0.047	0.067

X012b TO-263 (7) c) middle leg cut Weight = 2.5 g

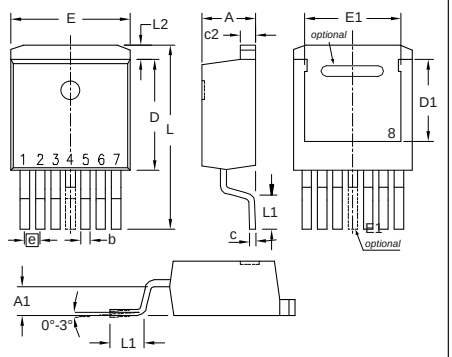

Dim.	Millimeter min	Millimeter max	Inches min	Inches max
A	4.20	4.60	0.165	0.181
A1	2.45	2.75	0.096	0.108
b	0.65	0.90	0.026	0.035
c	0.40	0.60	0.016	0.024
c2	1.14	1.40	0.045	0.055
D	8.38	8.64	0.330	0.340
D1	6.10	6.35	0.240	0.250
E	10.00	10.30	0.394	0.406
E1	7.34	8.00	0.290	0.315
e	1.27 BSC		0.050 BSC	
L	14.73	15.75	0.580	0.620
L1	2.24	2.84	0.088	0.112
L2	1.35	1.55	0.053	0.061

Outline drawings

IXYS

Dimensions in mm and inches (1 mm = 0.0394“)

X013 PLUS220™ (SMD) — Weight = 2 g

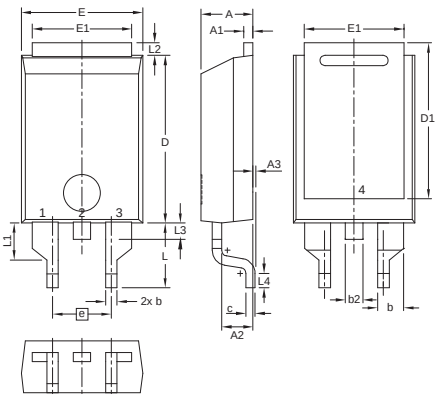

Dim.	Millimeter		Inches	
	min	max	min	max
A	4.30	4.70	0.169	0.185
A1	0.70	0.90	0.028	0.035
A2	2.50	3.00	0.098	0.118
A3	0.00	0.25	0.000	0.010
b	0.90	1.20	0.035	0.047
b1	2.03	2.41	0.080	0.095
b2	1.37	1.63	0.054	0.064
c	0.70	0.90	0.028	0.035
D	14.00	15.00	0.551	0.591
D1	13.00	13.70	0.512	0.539
E	10.00	11.00	0.394	0.433
E1	8.40	8.80	0.331	0.346
e	5.08 BSC		0.200 BSC	
L	5.30	5.80	0.209	0.228
L1	3.00	3.50	0.118	0.138
L2	0.90	1.30	0.035	0.051
L3	1.20	1.50	0.047	0.059
L4	1.00	1.50	0.039	0.059

X014a TO-247 AD — Weight = 6 g

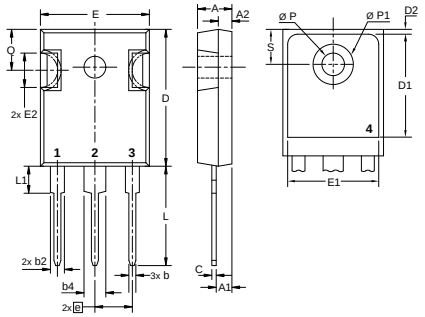

Dim.	Millimeter		Inches	
	min	max	min	max
A	4.70	5.30	0.185	0.209
A1	2.21	2.59	0.087	0.102
A2	1.50	2.49	0.059	0.098
b	0.99	1.40	0.039	0.055
b2	1.65	2.39	0.065	0.094
b4	2.59	3.43	0.102	0.135
c	0.38	0.89	0.015	0.035
D	20.79	21.45	0.819	0.845
D1	13.07	-	0.515	-
D2	0.51	1.35	0.020	0.053
E	15.48	16.24	0.610	0.640
E1	13.45	-	0.53	-
E2	4.31	5.48	0.170	0.216
e	5.45 BSC		0.215 BSC	
L	19.80	20.30	0.078	0.800
L1	-	4.49	-	0.177
Ø P	3.55	3.65	0.140	0.144
Ø P1	-	7.39	-	0.290
Q	5.38	6.19	0.212	0.244
S	6.14 BSC		0.242 BSC	

X014b TO-247 AD — Weight = 6 g

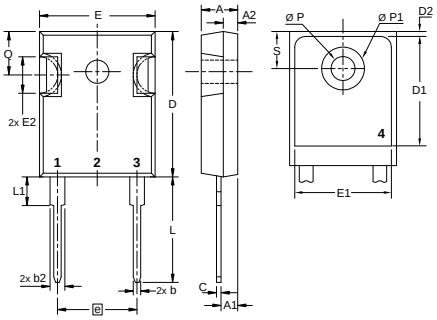

Dim.	Millimeter		Inches	
	min	max	min	max
A	4.70	5.30	0.185	0.209
A1	2.21	2.59	0.087	0.102
A2	1.50	2.49	0.059	0.098
b	0.99	1.40	0.039	0.055
b2	1.65	2.39	0.065	0.094
b4	2.59	3.43	0.102	0.135
c	0.38	0.89	0.015	0.035
D	20.79	21.45	0.819	0.845
D1	13.07	-	0.515	-
D2	0.51	1.35	0.020	0.053
E	15.48	16.24	0.610	0.640
E1	13.45	-	0.530	-
E2	4.31	5.48	0.170	0.216
e	10.90 BSC		0.430 BSC	
L	19.80	20.30	0.078	0.800
L1	-	4.49	-	0.177
Ø P	3.55	3.65	0.140	0.144
Ø P1	-	7.39	-	0.290
Q	5.38	6.19	0.212	0.244
S	6.14 BSC		0.242 BSC	

X014c TO-247 AD — Weight = 6 g

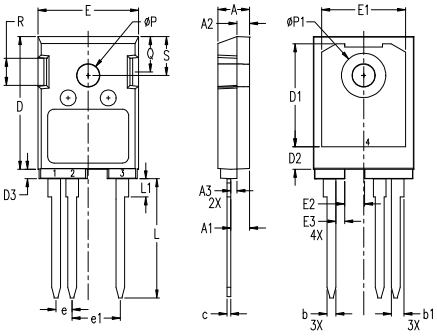

Dim.	Millimeter		Inches	
	min	max	min	max
A	4.90	5.10	0.193	0.201
A1	2.90	3.10	0.114	0.122
A2	1.90	2.10	0.075	0.083
A3	0.90	1.10	0.035	0.043
b	1.35	1.50	0.053	0.059
b1	1.90	2.10	0.075	0.083
c	0.55	0.75	0.022	0.030
D	20.80	21.40	0.819	0.843
D1	16.20	16.40	0.638	0.646
D2	3.40	3.70	0.134	0.146
D3	1.40	1.60	0.055	0.063
E	15.80	16.20	0.622	0.638
E1	13.20	13.40	0.520	0.528
E2	3.00	3.20	0.118	0.126
E3	1.30	1.50	0.051	0.059
e	2.54 BSC		0.100 BSC	
e1	7.62 BSC		0.300 BSC	
L	18.60	19.00	0.732	0.748
L1	2.70	3.00	0.106	0.118
Ø P	3.50	3.60	0.138	0.142
Ø P1	6.90	7.10	0.272	0.280
Q	5.50	5.70	0.216	0.224
R	4.20	4.30	0.165	0.169
S	6.10	6.30	0.240	0.248

X015a PLUS247™ — Weight = 7 g

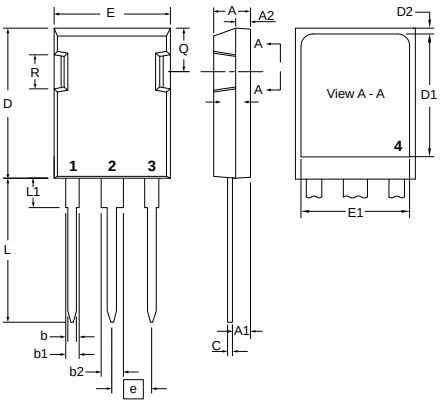

Dim.	Millimeter		Inches	
	min	max	min	max
A	4.83	5.21	0.190	0.205
A1	2.29	2.54	0.090	0.100
A2	1.91	2.16	0.075	0.085
b	1.14	1.40	0.045	0.055
b1	1.90	2.10	0.075	0.084
b2	2.92	3.12	0.115	0.123
C	0.60	0.80	0.024	0.031
D	20.80	21.34	0.819	0.840
E	15.75	16.13	0.620	0.635
e	5.45 BSC		0.215 BSC	
L	19.80	20.30	0.078	0.800
L1	3.80	4.30	0.150	0.170
Q	5.60	6.20	0.220	0.244
R	4.32	4.83	0.170	0.190

X015c PLUS247™ — Weight = 7 g

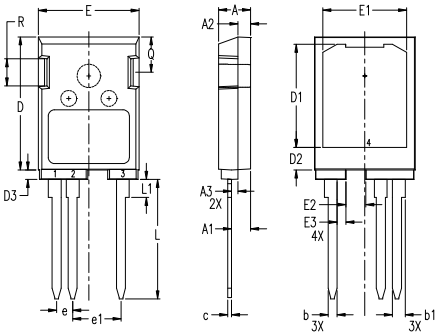

Dim.	Millimeter		Inches	
	min	max	min	max
A	4.90	5.10	0.193	0.201
A1	2.90	3.10	0.114	0.122
A2	1.90	2.10	0.075	0.083
A3	0.90	1.10	0.035	0.043
b	1.35	1.50	0.053	0.059
b1	1.90	2.10	0.075	0.083
c	0.55	0.75	0.022	0.030
D	20.80	21.40	0.819	0.843
D1	16.20	16.40	0.638	0.646
D2	3.40	3.70	0.134	0.146
D3	1.40	1.60	0.055	0.063
E	15.80	16.20	0.622	0.638
E1	13.20	13.40	0.520	0.528
E2	3.00	3.20	0.118	0.126
E3	1.30	1.50	0.051	0.059
e	2.54 BSC		0.100 BSC	
e1	7.62 BSC		0.300 BSC	
L	18.60	19.00	0.732	0.748
L1	2.70	3.00	0.106	0.118
Q	5.50	5.70	0.216	0.224
R	4.20	4.30	0.165	0.169

Outline drawings

IXYS

Dimensions in mm and inches (1 mm = 0.0394“)

X016a ISOPLUS247™ — Weight = 4.5 g

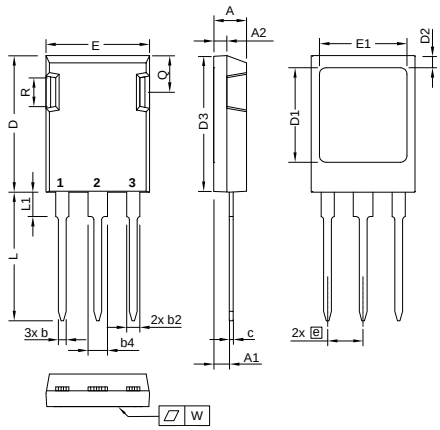

Dim.	Millimeter min	Millimeter max	Inches min	Inches max
A	4.83	5.21	0.190	0.205
A1	2.29	2.54	0.090	0.100
A2	1.91	2.16	0.075	0.085
b	1.14	1.40	0.045	0.055
b2	1.91	2.20	0.075	0.087
b4	2.92	3.24	0.115	0.128
c	0.61	0.83	0.024	0.033
D	20.80	21.34	0.819	0.840
D1	15.75	16.26	0.620	0.640
D2	1.65	2.15	0.065	0.085
D3	20.30	20.70	0.799	0.815
E	15.75	16.13	0.620	0.635
E1	13.21	13.72	0.520	0.540
e	5.45 BSC		0.215 BSC	
L	19.81	20.60	0.780	0.811
L1	3.81	4.38	0.150	0.172
Q	5.59	6.20	0.220	0.244
R	4.25	5.50	0.167	0.217
W	-	0.10	-	0.004

X016b ISOPLUS247™ — Weight = 4.5 g

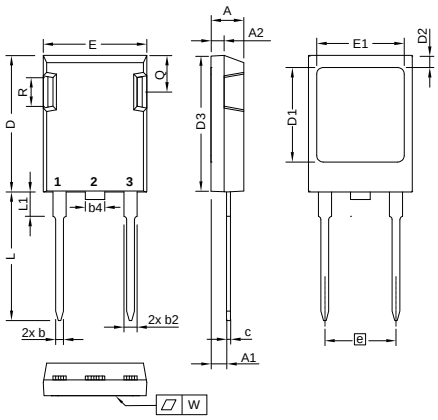

Dim.	Millimeter min	Millimeter max	Inches min	Inches max
A	4.83	5.21	0.190	0.205
A1	2.29	2.54	0.090	0.100
A2	1.91	2.16	0.075	0.085
b	1.14	1.40	0.045	0.055
b2	1.91	2.20	0.075	0.087
b4	2.92	3.24	0.115	0.128
c	0.61	0.83	0.024	0.033
D	20.80	21.34	0.819	0.840
D1	15.75	16.26	0.620	0.640
D2	1.65	2.15	0.065	0.085
D3	20.30	20.70	0.799	0.815
E	15.75	16.13	0.620	0.635
E1	13.21	13.72	0.520	0.540
e	10.90 BSC		0.430 BSC	
L	19.81	20.60	0.780	0.811
L1	3.81	4.38	0.150	0.172
Q	5.59	6.20	0.220	0.244
R	4.25	5.50	0.167	0.217
W	-	0.10	-	0.004

X016c ISO247™ — Weight = 4.5 g

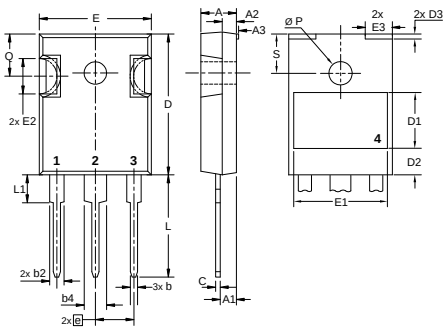

Dim.	Millimeter min	Millimeter max	Inches min	Inches max
A	4.70	5.30	0.185	0.209
A1	2.21	2.59	0.087	0.102
A2	1.50	2.49	0.059	0.098
b	0.99	1.40	0.039	0.055
b2	1.65	2.39	0.065	0.094
b4	2.59	3.43	0.102	0.135
c	0.38	0.89	0.015	0.035
D	20.79	21.45	0.819	0.844
E	15.49	16.24	0.610	0.639
E2	4.31	5.48	0.170	0.216
e	5.46 BSC		0.215 BSC	
L	19.80	20.30	0.780	0.799
L1	-	4.49	-	0.177
Ø P	3.55	3.65	0.140	0.144
Q	5.38	6.19	0.212	0.244

X016d ISO247™ — Weight = 4 g

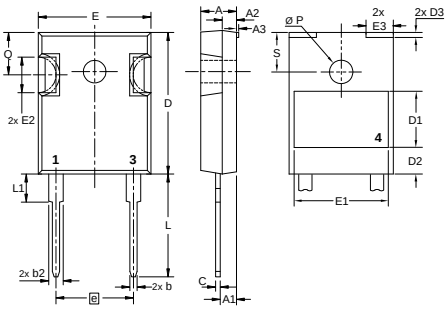

Dim.	Millimeter min	Millimeter max	Inches min	Inches max
A	19.81	20.32	0.780	0.800
B	20.80	21.46	0.819	0.845
C	15.75	16.26	0.610	0.640
D	3.55	3.65	0.140	0.144
E	4.32	5.49	0.170	0.216
F	5.40	6.20	0.212	0.244
G	1.65	2.13	0.065	0.084
H	-	4.50	-	0.177
J	1.00	1.40	0.040	0.055
K	10.80	11.00	0.426	0.433
L	4.70	5.30	0.185	0.209
M	0.40	0.80	0.016	0.031
N	1.50	2.49	0.087	0.102

X017a TO-3P — Weight = 5.5 g

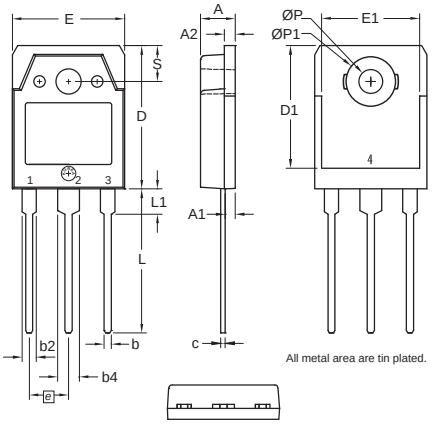

Dim.	Millimeter min	Millimeter max	Inches min	Inches max
A	4.70	4.90	0.185	0.193
A1	1.30	1.50	0.051	0.059
A2	1.45	1.65	0.057	0.065
b	0.90	1.15	0.035	0.045
b2	1.90	2.20	0.075	0.087
b4	2.90	3.20	0.114	0.126
c	0.55	0.80	0.022	0.031
D	19.80	20.10	0.780	0.791
D1	16.90	17.20	0.665	0.677
E	15.50	15.80	0.610	0.622
E1	13.50	13.70	0.531	0.539
e	5.45 BSC		0.215 BSC	
L	19.80	20.20	0.780	0.795
L1	3.40	3.60	0.134	0.142
Ø P	3.20	3.40	0.126	0.134
ØP1	6.90	7.10	0.272	0.280
S	4.90	5.10	0.193	0.201

X017b TO-3P — Weight = 5.5 g

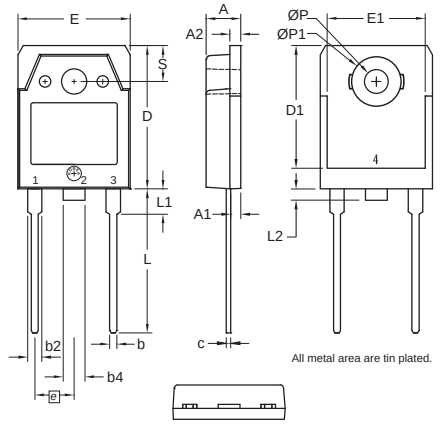

Dim.	Millimeter min	Millimeter max	Inches min	Inches max
A	4.70	4.90	0.185	0.193
A1	1.30	1.50	0.051	0.059
A2	1.45	1.65	0.057	0.065
b	0.90	1.15	0.035	0.045
b2	1.90	2.20	0.075	0.087
b4	2.90	3.20	0.114	0.126
c	0.55	0.80	0.022	0.031
D	19.80	20.10	0.780	0.791
D1	16.90	17.20	0.665	0.677
E	15.50	15.80	0.610	0.622
E1	13.50	13.70	0.531	0.539
e	5.45 BSC		0.215 BSC	
L	19.80	20.20	0.780	0.795
L1	3.40	3.60	0.134	0.142
L2	0.00	1.40	0.000	0.055
Ø P	3.20	3.40	0.126	0.134
ØP1	6.90	7.10	0.272	0.280
S	4.90	5.10	0.193	0.201

Outline drawings

IXYS

Dimensions in mm and inches (1 mm = 0.0394“)

X017c TO-3PFP — Weight = 5.5 g

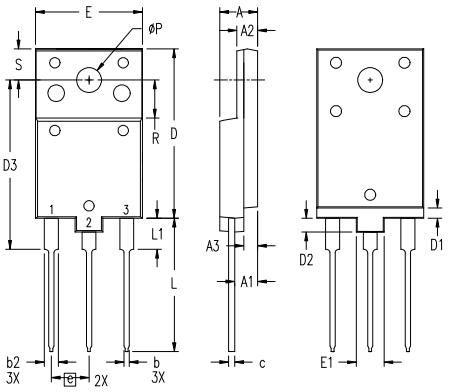

Note:
1. All metal area are matte pure tin plated.
2. All plastic area are isolated 2500 V AC from leads

Dim.	Millimeter		Inches	
	min	max	min	max
A	5.40	5.80	0.213	0.228
A1	3.10	3.50	0.122	0.138
A2	2.90	3.30	0.114	0.130
A3	1.90	2.30	0.075	0.091
b	0.65	0.95	0.026	0.037
b2	1.90	2.30	0.075	0.091
c	0.80	1.10	0.031	0.043
D	24.30	24.70	0.957	0.972
D1	1.30	1.70	0.051	0.067
D2	1.80	2.2	0.071	0.087
E	15.40	15.80	0.606	0.622
E1	3.90	4.30	0.154	0.169
e	5.45 BSC		0.215 BSC	
L	19.00	19.50	0.748	0.768
L1	4.30	4.70	0.169	0.185
Ø P	3.40	3.80	0.134	0.150
R	5.30	5.70	0.209	0.224
S	4.30	4.70	0.169	0.185

X017d TO-3PFP — Weight = 5.4 g

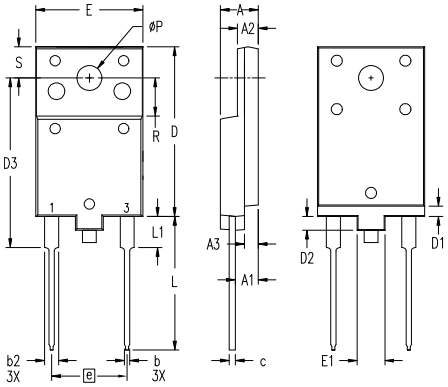

Note:
1. All metal area are matte pure tin plated.
2. All plastic area are isolated 2500 V AC from leads

Dim.	Millimeter		Inches	
	min	max	min	max
A	5.40	5.80	0.213	0.228
A1	3.10	3.50	0.122	0.138
A2	2.90	3.30	0.114	0.130
A3	1.90	2.30	0.075	0.091
b	0.65	0.95	0.026	0.037
b2	1.90	2.30	0.075	0.091
c	0.80	1.10	0.031	0.043
D	24.30	24.70	0.957	0.972
D1	1.30	1.70	0.051	0.067
D2	1.80	2.2	0.071	0.087
E	15.40	15.80	0.606	0.622
E1	3.90	4.30	0.154	0.169
e	10.9 BSC		0.430 BSC	
L	19.00	19.50	0.748	0.768
L1	4.30	4.70	0.169	0.185
Ø P	3.40	3.80	0.134	0.150
R	5.30	5.70	0.209	0.224
S	4.30	4.70	0.169	0.185

X018 TO-268 I³PAK — Weight = 4.5 g

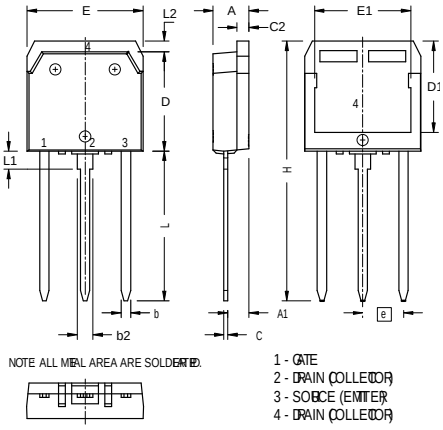

Dim.	Millimeter		Inches	
	min	max	min	max
A	4.90	5.10	0.193	0.201
A1	2.70	2.90	0.106	0.114
b	1.15	1.45	0.045	0.057
b2	1.90	2.10	0.075	0.083
C	0.40	0.65	0.016	0.026
C 2	1.45	1.60	0.057	0.063
D	13.80	14.00	0.543	0.551
D1	12.40	12.70	0.488	0.500
E	15.85	16.05	0.624	0.632
E1	13.30	13.60	0.524	0.535
e	5.45 BSC		0.215 BSC	
H	34.67	35.43	1.365	1.395
L	19.81	20.32	0.780	0.800
L1	2.00	2.30	0.079	0.091
L2	1.00	1.15	0.039	0.045

X019 TO-268 AA (D³PAK) — Weight = 4 g

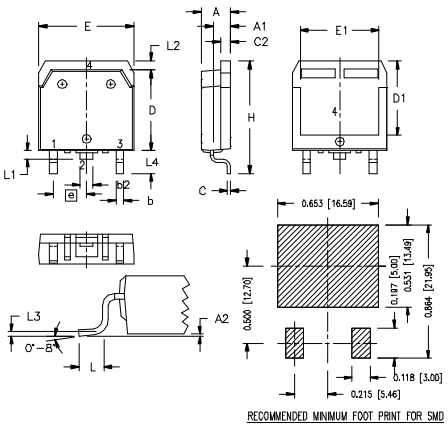

Dim.	Millimeter		Inches	
	min	max	min	max
A	4.90	5.10	0.193	0.201
A1	2.70	2.90	0.106	0.114
A2	0.02	0.25	0.001	0.100
b	1.15	1.45	0.045	0.057
b2	1.90	2.10	0.075	0.083
C	0.40	0.65	0.016	0.026
C 2	1.45	1.60	0.057	0.063
D	13.80	14.00	0.543	0.551
D1	12.40	12.70	0.488	0.500
E	15.85	16.05	0.624	0.632
E1	13.30	13.60	0.524	0.535
e	5.45 BSC		0.215 BSC	
H	18.70	19.10	0.736	0.752
L	2.40	2.70	0.094	0.106
L1	1.20	1.40	0.047	0.055
L2	1.00	1.15	0.039	0.045
L3	2.54 BSC		0.100 BSC	
L4	3.80	4.10	0.150	0.161

X019a TO-268 AA (D³PAK) — Weight = 4 g

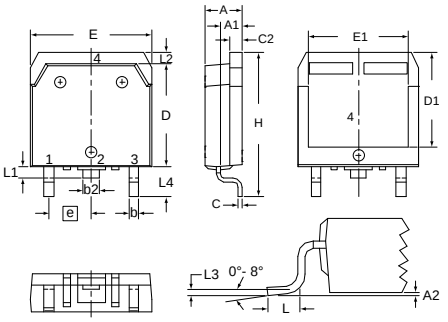

Dim.	Millimeter		Inches	
	min	max	min	max
A	4.90	5.10	0.193	0.201
A1	2.70	2.90	0.106	0.114
A2	0.02	0.25	0.001	0.100
b	1.15	1.45	0.045	0.057
C	0.40	0.65	0.016	0.026
C 2	1.45	1.60	0.057	0.063
D	13.80	14.00	0.543	0.551
D1	11.80	12.10	0.465	0.476
D2	7.50	7.80	0.295	0.307
D3	2.90	3.20	0.114	0.126
E	15.85	16.05	0.624	0.632
E1	13.30	13.60	0.524	0.535
e	5.45 BSC		0.215 BSC	
H	18.70	19.10	0.736	0.752
L	1.70	2.00	0.067	0.079
L2	1.00	1.15	0.039	0.045
L3	0.25 BSC		0.010 BSC	
L4	3.80	4.10	0.150	0.161

X020a TO-264 AA — Weight = 10 g

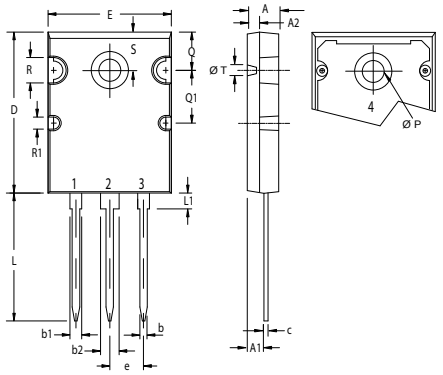

Dim.	Millimeter		Inches	
	min	max	min	max
A	4.82	5.13	0.190	0.202
A1	2.54	2.89	0.100	0.114
A2	2.00	2.10	0.079	0.083
b	1.12	1.42	0.044	0.056
b2	2.90	3.09	0.114	0.122
c	0.53	0.83	0.021	0.033
D	25.91	26.16	1.020	1.030
E	19.81	19.96	0.780	0.786
e	5.45 BSC		0.215 BSC	
J	0.00	0.25	0.000	0.010
K	0.00	0.25	0.000	0.010
L	20.32	20.83	0.800	0.820
L1	2.29	2.59	0.090	0.102
P	3.17	2.66	0.125	0.144
Q	6.07	6.27	0.239	0.247
Q1	8.38	8.69	0.330	0.342
R	3.81	4.32	0.150	0.170
R1	1.78	2.29	0.070	0.090
S	6.04	6.30	0.238	0.248
T	1.57	1.83	0.062	0.072

Outline drawings

IXYS

Dimensions in mm and inches (1 mm = 0.0394“)

X021a PLUS264™ Weight = 10 g

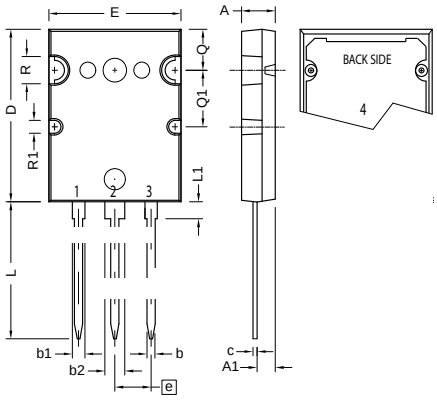

Dim.	Millimeter		Inches	
	min	max	min	max
A	4.70	5.31	0.185	0.209
A1	2.59	3.00	0.102	0.118
b	0.94	1.40	0.037	0.055
b1	2.21	2.59	0.087	0.102
b2	2.79	3.20	0.110	0.126
c	0.43	0.74	0.017	0.029
D	25.58	26.59	1.007	1.047
E	19.30	20.29	0.760	0.799
e	5.45 BSC		0.215 BSC	
L	19.79	21.39	0.779	0.842
L1	2.21	2.59	0.087	0.102
Q	6.10	6.50	0.240	0.256
Q1	8.38	8.79	0.330	0.346
Ø R	3.94	4.75	0.155	0.187
ØR1	2.16	2.36	0.085	0.093

X022a ISOPLUS264™ Weight = 7.5 g

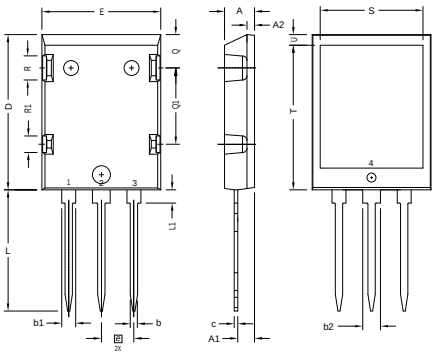

Dim.	Millimeter		Inches	
	min	max	min	max
A	4.83	5.21	0.190	0.205
A1	2.59	3.00	0.102	0.118
A2	1.17	1.40	0.046	0.055
b	1.14	1.40	0.045	0.055
b1	1.60	1.83	0.063	0.072
b2	2.54	2.79	0.100	0.110
b3	1.47	1.73	0.058	0.068
c	0.51	0.74	0.020	0.029
D	25.91	26.42	1.020	1.040
E	19.56	20.29	0.770	0.799
e	3.81 BSC		0.150 BSC	
L	19.81	21.83	0.780	0.820
L1	2.03	2.59	0.080	0.102
Q	5.33	5.97	0.210	0.235
Q1	12.45	13.03	0.490	0.513
R	3.81	4.57	0.150	0.180
R1	2.54	3.30	0.100	0.130
S	16.97	17.53	0.668	0.690
T	20.34	20.85	0.801	0.821
U	1.65	2.03	0.065	0.080

X022 ISOPLUS264™ Weight = 7.5 g

c) 5 pin
d) 3 (sym) w/o pin 2 & 4
e) 3 (HV) w/o pin 3 & 4
f) 2 (HV) w/o pin 2 & 3 & 4

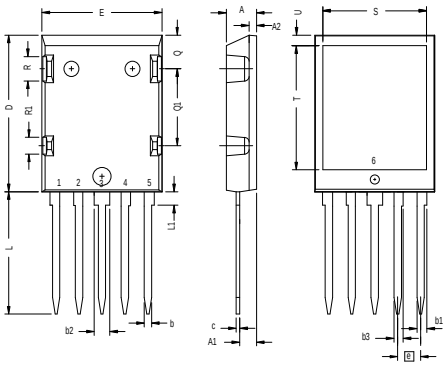

Dim.	Millimeter		Inches	
	min	max	min	max
A	4.83	5.21	0.190	0.205
A1	2.59	3.00	0.102	0.118
A2	1.17	1.40	0.046	0.055
b	1.14	1.40	0.045	0.055
b1	1.60	1.83	0.063	0.072
b2	2.54	2.79	0.100	0.110
b3	1.47	1.73	0.058	0.068
c	0.51	0.74	0.020	0.029
D	25.91	26.42	1.020	1.040
E	19.56	20.29	0.770	0.799
e	3.81 BSC		0.150 BSC	
L	19.81	21.83	0.780	0.820
L1	2.03	2.59	0.080	0.102
Q	5.33	5.97	0.210	0.235
Q1	12.45	13.03	0.490	0.513
R	3.81	4.57	0.150	0.180
R1	2.54	3.30	0.100	0.130
S	16.97	17.53	0.668	0.690
T	20.34	20.85	0.801	0.821
U	1.65	2.03	0.065	0.080

X024a ISOPLUS i4-PAC™ Weight = 6 g

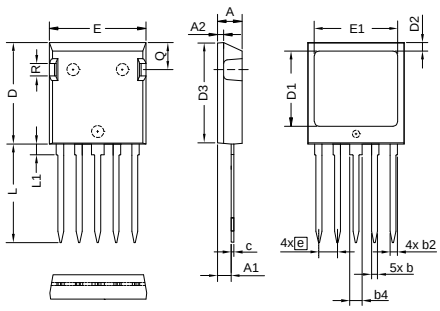

Dim.	Millimeter		Inches	
	min	max	min	max
A	4.83	5.21	0.190	0.205
A1	2.59	3.00	0.102	0.118
A2	1.17	2.16	0.046	0.085
b	1.14	1.40	0.045	0.055
b2	1.47	1.73	0.058	0.068
b4	2.54	2.79	0.100	0.110
c	0.51	0.74	0.020	0.029
D	20.80	21.34	0.819	0.840
D1	14.99	15.75	0.590	0.620
D2	1.65	2.03	0.065	0.080
D3	20.30	20.70	0.799	0.815
E	19.56	20.29	0.770	0.799
E1	16.76	17.53	0.660	0.690
e	3.81 BSC		0.150 BSC	
L	19.81	21.34	0.780	0.840
L1	2.11	2.59	0.083	0.102
Q	5.33	6.20	0.210	0.244
R	2.54	4.57	0.100	0.180
W	-	0.10	-	0.004

X024b ISOPLUS i4-PAC™ Weight = 5.5 g

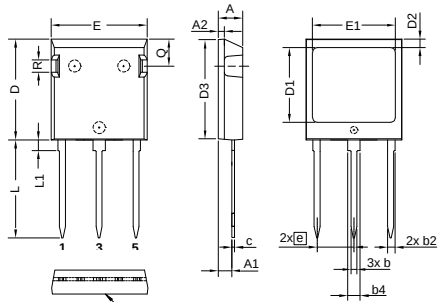

Dim.	Millimeter		Inches	
	min	max	min	max
A	4.83	5.21	0.190	0.205
A1	2.59	3.00	0.102	0.118
A2	1.17	2.16	0.046	0.085
b	1.14	1.40	0.045	0.055
b2	1.47	1.73	0.058	0.068
b4	2.54	2.79	0.100	0.110
c	0.51	0.74	0.020	0.029
D	20.80	21.34	0.819	0.840
D1	14.99	15.75	0.590	0.620
D2	1.65	2.03	0.065	0.080
D3	20.30	20.70	0.799	0.815
E	19.56	20.29	0.770	0.799
E1	16.76	17.53	0.660	0.690
e	7.62 BSC		0.300 BSC	
L	19.81	21.34	0.780	0.840
L1	2.11	2.59	0.083	0.102
Q	5.33	6.20	0.210	0.244
R	2.54	4.57	0.100	0.180
W	-	0.10	-	0.004

X024c ISOPLUS i4-PAC™ Weight = 5.5 g

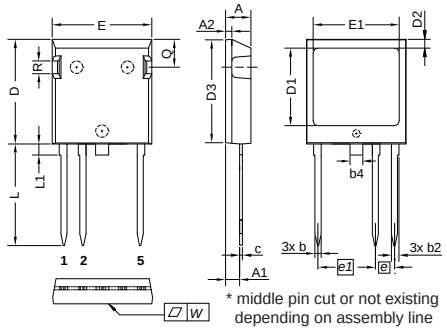

* middle pin cut or not existing depending on assembly line

Dim.	Millimeter		Inches	
	min	max	min	max
A	4.83	5.21	0.190	0.205
A1	2.59	3.00	0.102	0.118
A2	1.17	2.16	0.046	0.085
b	1.14	1.40	0.045	0.055
b2	1.47	1.73	0.058	0.068
b4*	2.54	2.79	0.100	0.110
c	0.51	0.74	0.020	0.029
D	20.80	21.34	0.819	0.840
D1	14.99	15.75	0.590	0.620
D2	1.65	2.03	0.065	0.080
D3	20.30	20.70	0.799	0.815
E	19.56	20.29	0.770	0.799
E1	16.76	17.53	0.660	0.690
e	3.81 BSC		0.150 BSC	
e1	11.43 BSC		0.450 BSC	
L	19.81	21.34	0.780	0.840
L1	2.11	2.59	0.083	0.102
Q	5.33	6.20	0.210	0.244
R	2.54	4.57	0.100	0.180
W	-	0.10	-	0.004

Outline drawings

Dimensions in mm and inches (1 mm = 0.0394“)

X024d ISOPLUS i4-PAC™ — Weight = 6 g

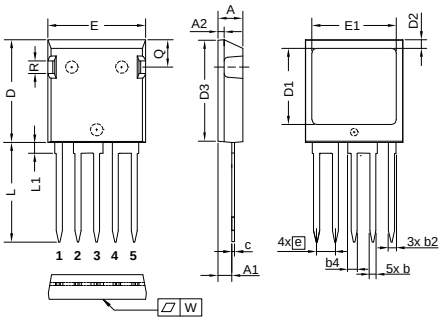

Dim.	Millimeter		Inches	
	min	max	min	max
A	4.83	5.21	0.190	0.205
A1	2.59	3.00	0.102	0.118
A2	1.17	2.16	0.046	0.085
b	1.14	1.40	0.045	0.055
b2	1.47	1.73	0.058	0.068
c	0.51	0.74	0.020	0.029
D	20.80	21.34	0.819	0.840
D1	14.99	15.75	0.590	0.620
D2	1.65	2.03	0.065	0.080
D3	20.30	20.70	0.799	0.815
E	19.56	20.29	0.770	0.799
E1	16.76	17.53	0.660	0.690
e	3.81 BSC		0.150 BSC	
L	19.81	21.34	0.780	0.840
L1	2.11	2.59	0.083	0.102
Q	5.33	6.20	0.210	0.244
R	2.54	4.57	0.100	0.180
W	-	0.10	-	0.004

X024e ISOPLUS i4-PAC™ — Weight = 6 g

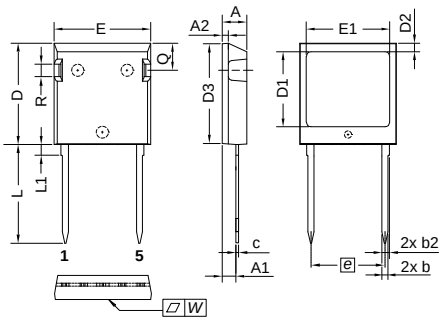

Dim.	Millimeter		Inches	
	min	max	min	max
A	4.83	5.21	0.190	0.205
A1	2.59	3.00	0.102	0.118
A2	1.17	2.16	0.046	0.085
b	1.14	1.40	0.045	0.055
b2	1.47	1.73	0.058	0.068
c	0.51	0.74	0.020	0.029
D	20.80	21.34	0.819	0.840
D1	14.99	15.75	0.590	0.620
D2	1.65	2.03	0.065	0.080
D3	20.30	20.70	0.799	0.815
E	19.56	20.29	0.770	0.799
E1	16.76	17.53	0.660	0.690
e	15.24 BSC		0.600 BSC	
L	19.81	21.34	0.780	0.840
L1	2.11	2.59	0.083	0.102
Q	5.33	6.20	0.210	0.244
R	2.54	4.57	0.100	0.180
W	-	0.10	-	0.004

X025a GBFP — Weight = 7 g

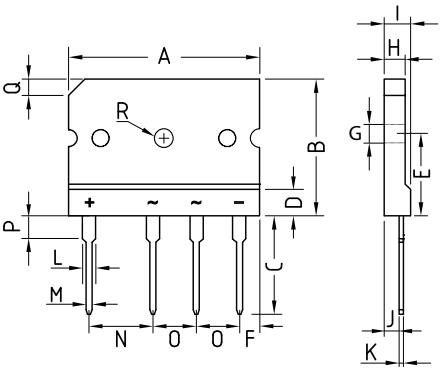

Dim.	Millimeter		Inches	
	min	max	min	max
A	29.70	30.30	1.170	1.194
B	19.70	20.30	0.776	0.800
C	17.00	18.00	0.670	0.709
D	4.70	4.90	0.185	0.193
E	10.80	11.20	0.426	0.441
F	2.30	2.70	0.091	0.106
G	3.10	3.40	0.122	0.134
H	3.40	3.80	0.134	0.150
I	4.40	4.80	0.173	0.189
J	2.50	2.90	0.099	0.114
K	0.60	0.80	0.024	0.032
L	2.00	2.40	0.079	0.095
M	0.90	1.10	0.035	0.043
N	9.80	10.20	0.386	0.402
O	7.30	7.70	0.288	0.303
P	3.80	4.20	0.150	0.165
Q	(3.0) x 45°		(0.118) x 45°	
Ø R	3.1	3.4	0.122	0.134

X025b GUFP — Weight = 8.5 g

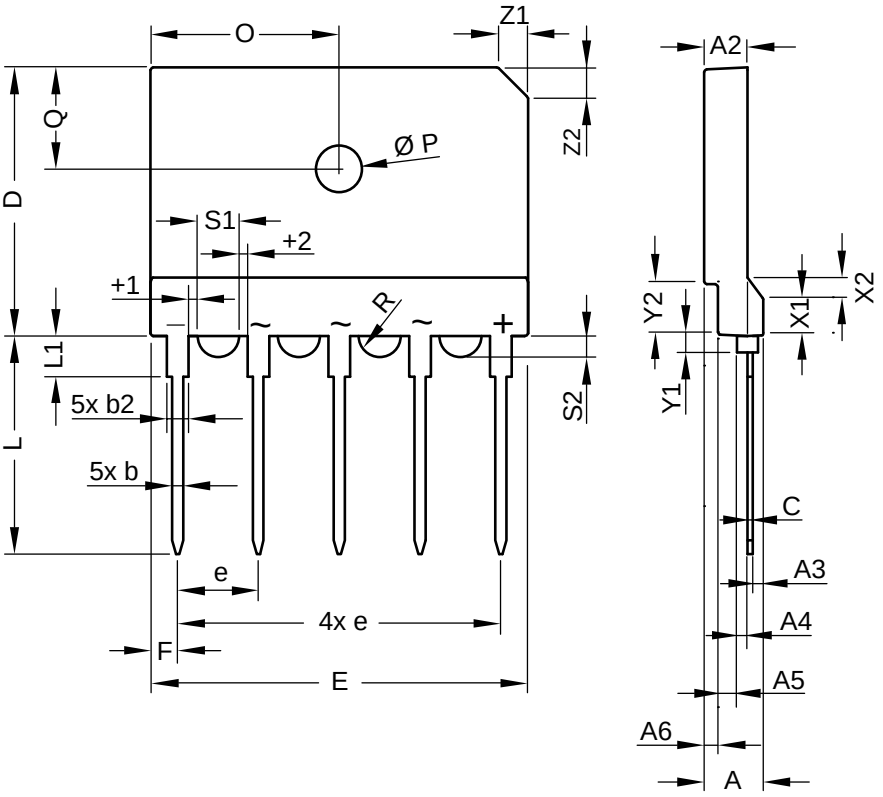

Dim.	Millimeter			Inches		
	min	typ.	max	min	typ.	max
A	5.40	5.50	5.60	0.213	0.217	0.221
A2	3.90	4.00	4.10	0.154	0.158	0.162
A3	0.95	1.00	1.10	0.037	0.039	0.043
A4	0.95	1.00	1.05	0.037	0.039	0.041
A5	1.60	1.70	1.80	0.063	0.067	0.071
A6	1.25	1.30	1.35	0.049	0.051	0.053
b	0.95	1.00	1.05	0.037	0.039	0.041
b2	1.95	2.00	2.05	0.077	0.079	0.081
C	0.45	0.50	0.55	0.018	0.020	0.022
D	24.80	25.00	25.20	0.977	0.985	0.993
E	34.70	35.00	35.30	1.367	1.379	1.391
e	BSC	7.50		BSC	0.296	
F	2.40	2.50	2.60	0.095	0.099	0.102
L	2.30	20.40	2.50	0.091	0.804	0.099
L1	3.70	3.75	3.80	0.146	0.148	0.150
O	17.40	17.50	17.60	0.686	0.690	0.693
Ø P	4.10	4.20	4.30	0.162	0.165	0.169
Q	9.20	9.30	9.40	0.362	0.366	0.370
$^{Ø}/_{2}$ R	-	1.77	-	-	0.070	-
s1	3.45	3.50	3.55	0.136	0.138	0.140
s2	1.45	1.50	1.55	0.057	0.059	0.061
t1	0.95	1.00	1.05	0.037	0.039	0.041
t2	0.95	1.00	1.05	0.037	0.039	0.041
x1	3.20	3.30	3.40	0.126	0.130	0.134
x2	1.90	2.00	2.10	0.075	0.079	0.083
y1	1.60	1.65	1.70	0.063	0.065	0.067
y2	4.65	4.70	4.75	0.183	0.185	0.187
z1	2.80	2.90	3.00	0.110	0.114	0.118

Outline drawings

Dimensions in mm and inches (1 mm = 0.0394“)

X026c ISOPLUS™-DIL (SMD)

Weight = 13 g

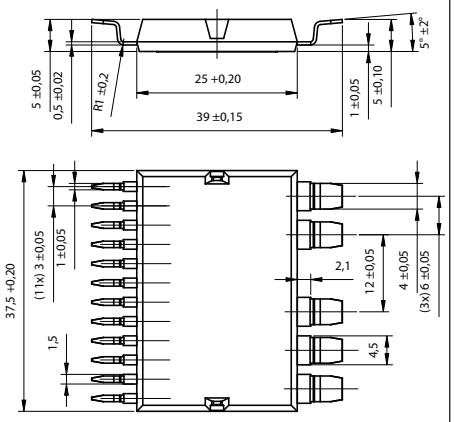

X026d ISOPLUS™-DIL (SMD)

Weight = 13 g

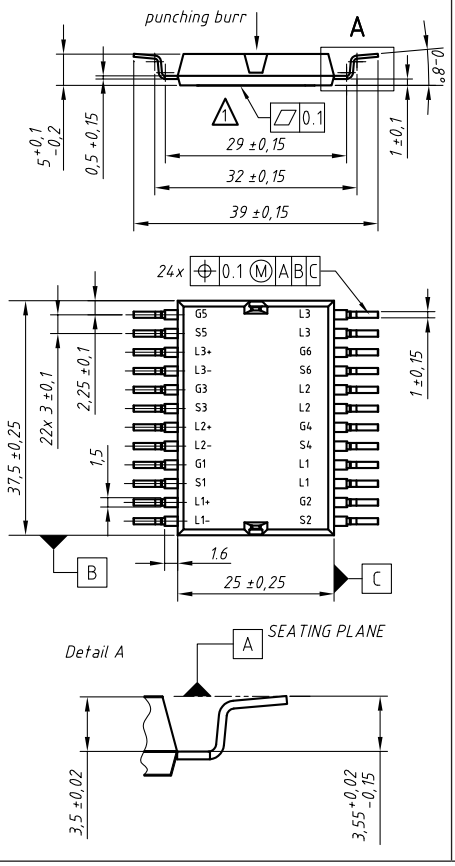

X027a SOT-227 B miniBLOC
X027b SOT-227 UI miniBLOC

Weight = 29 g

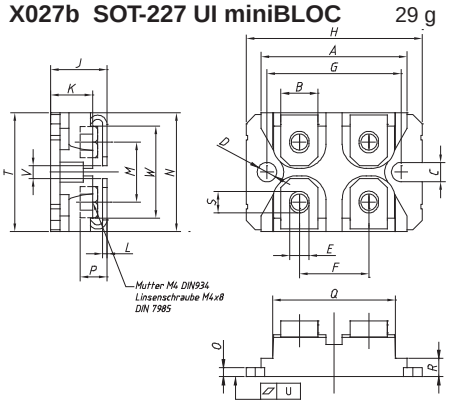

Dim.	Millimeter		Inches	
	min	max	min	max
A	31.50	31.88	1.240	1.255
B	7.80	8.20	0.307	0.323
C	4.09	4.29	0.161	0.169
D	4.09	4.29	0.161	0.169
E	4.09	4.29	0.161	0.169
F	14.91	15.11	0.587	0.595
G	30.12	30.30	1.186	1.193
H	37.80	38.23	1.488	1.505
J	11.68	12.22	0.460	0.481
K	8.92	9.60	0.351	0.378
L	0.74	0.84	0.029	0.033
M	12.50	13.10	0.492	0.516
N	25.15	25.42	0.990	1.001
O	1.95	2.13	0.077	0.084
P	4.95	6.20	0.195	0.244
Q	26.54	26.90	1.045	1.059
R	3.94	4.42	0.155	0.174
S	4.55	4.85	0.179	0.191
T	24.59	25.25	0.968	0.994
U	-0.05	0.10	-0.002	0.004
V	3.20	5.50	0.126	0.217
W	19.81	21.08	0.780	0.830
Z	2.50	2.70	0.098	0.106

X028 ISOPLUS227™

Weight = 19 g

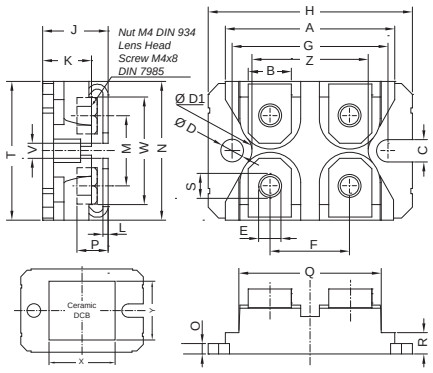

Dim.	Millimeter		Inches	
	min	max	min	max
A	31.50	32.26	1.240	1.270
B	7.87	8.38	0.310	0.330
C	3.94	4.19	0.155	0.165
D	3.94	4.19	0.155	0.165
D1	3.81	3.98	0.150	0.157
E	4.06	4.27	0.160	0.168
F	14.91	15.11	0.587	0.595
G	30.12	30.30	1.186	1.193
H	37.80	38.23	1.489	1.505
J	11.81	12.22	0.465	0.481
K	9.40	9.65	0.370	0.380
L	0.76	0.84	0.030	0.033
M	12.60	12.85	0.496	0.506
N	25.15	25.42	0.990	1.001
O	2.54	2.64	0.100	0.105
P	4.95	5.97	0.195	0.235
Q	26.54	26.90	1.045	1.059
R	4.06	4.32	0.160	0.170
S	4.72	4.85	0.186	0.191
T	24.59	25.07	0.968	0.987
U	-0.03	0.05	-0.001	0.002
V	3.30	4.06	0.130	0.160
W	19.81	21.08	0.780	0.830
X	19.56	20.57	0.770	0.810
Y	17.27	18.29	0.680	0.720
Z	22.48	22.66	0.885	0.892

X030a SMPD-B

Weight = 8.5 g

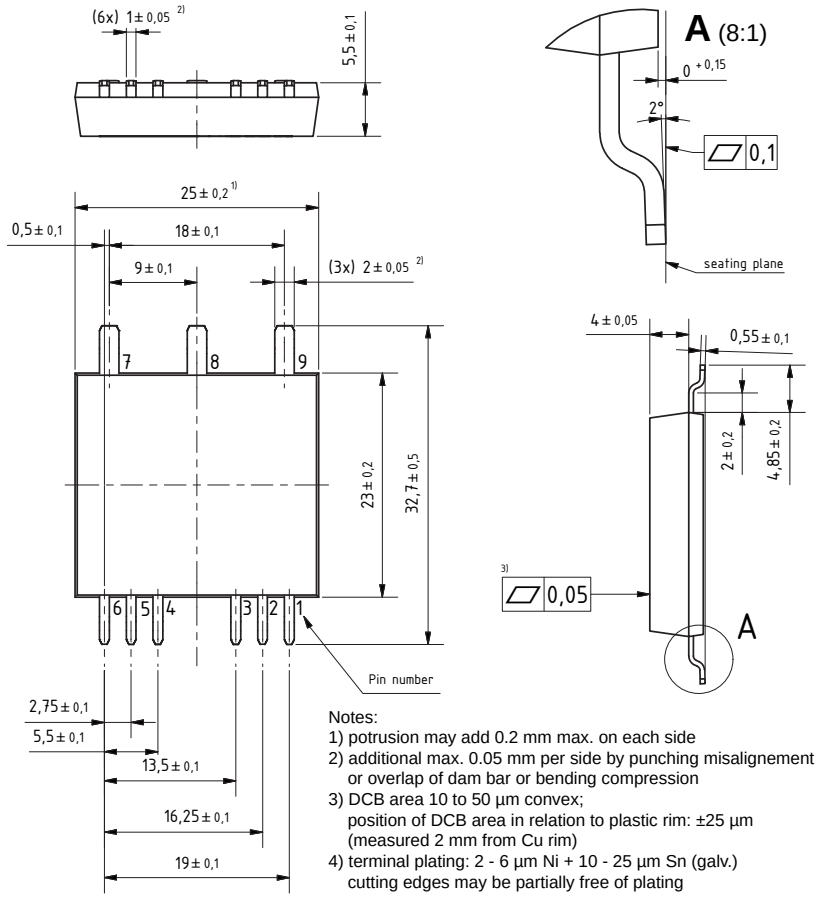

Notes:
1) potrusion may add 0.2 mm max. on each side
2) additional max. 0.05 mm per side by punching misalignement or overlap of dam bar or bending compression
3) DCB area 10 to 50 µm convex; position of DCB area in relation to plastic rim: ±25 µm (measured 2 mm from Cu rim)
4) terminal plating: 2 - 6 µm Ni + 10 - 25 µm Sn (galv.) cutting edges may be partially free of plating

Outline drawings

Dimensions in mm and inches (1 mm = 0.0394“)

X031...* SMPD-X * See data sheet for pin arrangement

Weight = 8.5 g*

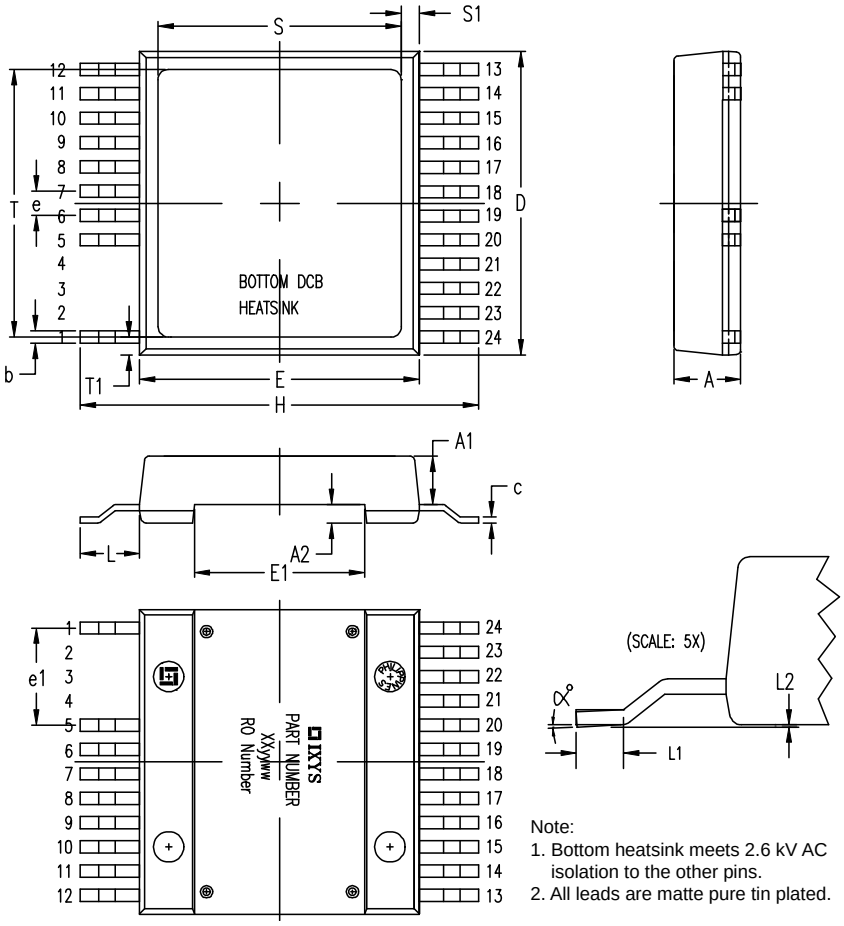

Dim.	Millimeter		Inches	
	min	max	min	max
A	5.30	5.70	0.209	0.224
A1	3.90	4.10	0.154	0.161
A2	1.40	1.60	0.055	0.063
b	0.90	1.15	0.035	0.045
c	0.45	0.65	0.018	0.026
D	24.80	25.25	0.976	0.994
E	22.80	23.25	0.898	0.915
E1	13.80	14.20	0.543	0.559
e	2.00	BSC	0.079	BSC
e1	8.00	BSC	0.315	BSC
H	32.30	33.30	1.272	1.311
L	4.60	5.30	0.181	0.209
L1	1.30	1.70	0.051	0.067
L2	0.00	0.15	0.000	0.006
S	18.85	20.12	0.742	0.792
S1	1.45	2.08	0.057	0.082
T	20.90	22.17	0.823	0.873
T1	1.42	2.03	0.056	0.080
a	4°	-	4°	-

Note:
1. Bottom heatsink meets 2.6 kV AC isolation to the other pins.
2. All leads are matte pure tin plated.

X032... MiniSMPD * See data sheet for pin arrangement

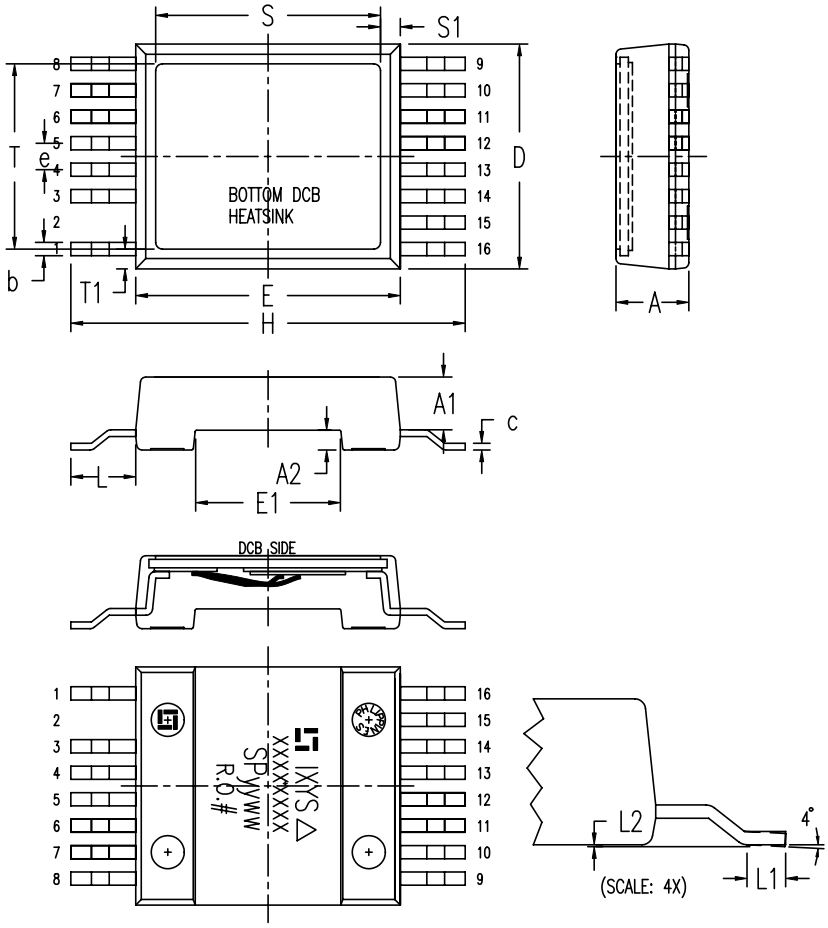

Dim.	Millimeter		Inches	
	min	max	min	max
A	5.30	5.70	0.209	0.224
A1	3.90	4.10	0.154	0.161
A2	1.40	1.60	0.055	0.063
b	0.90	1.15	0.035	0.045
c	0.45	0.65	0.018	0.026
D	16.80	17.20	0.661	0.677
E	19.80	20.20	0.780	0.795
E1	10.80	11.20	0.425	0.441
e	2.00 BSC		0.079 BSC	
H	29.50	30.10	1.161	1.185
L	4.60	5.30	0.181	0.209
L1	1.30	1.70	0.051	0.067
L2	0.00	0.15	0.000	0.006
S	16.80	17.20	0.661	0.677
S1	1.30	1.70	0.051	0.067
T	13.80	14.20	0.543	0.559
T1	1.30	1.70	0.051	0.067

NOTE:
1. All leads are matte pure tin plated.
2. Cu surface of bottom DCB is pre-Ni plated unless otherwise.
3. Cu surface of bottom DCB is electrically isolated 2.500V AC from all other leads.
4. Unless other specified, pin out are as follows:
   Pin #1 - Gate
   Pin #3 - Gate return or source
   Pin #4 through #8 - Source (emitter)
   Pin #9 through #16 - Drain (collector)

Outline drawings

Dimensions in mm and inches (1 mm = 0.0394“)

X101 ECO-PAC1 Weight = 19 g

See data sheet for pin arrangement

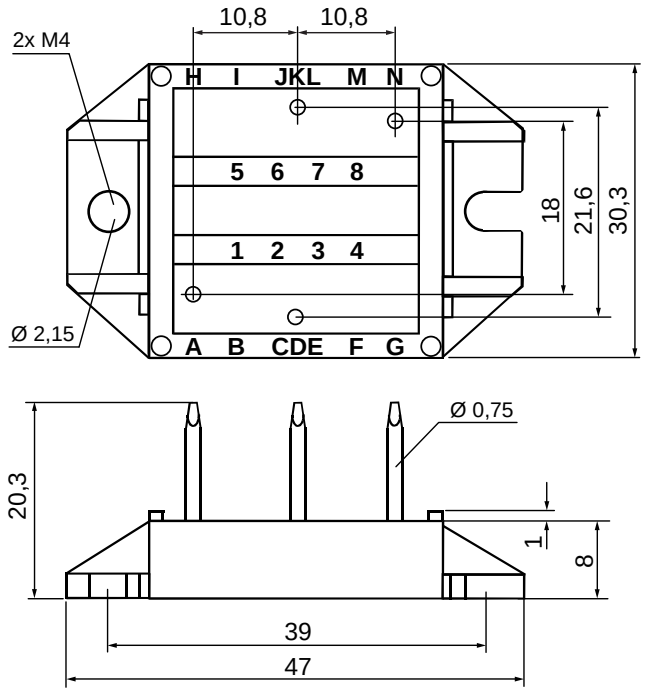

X102 ECO-PAC2 Weight = 23 g

See data sheet for pin arrangement

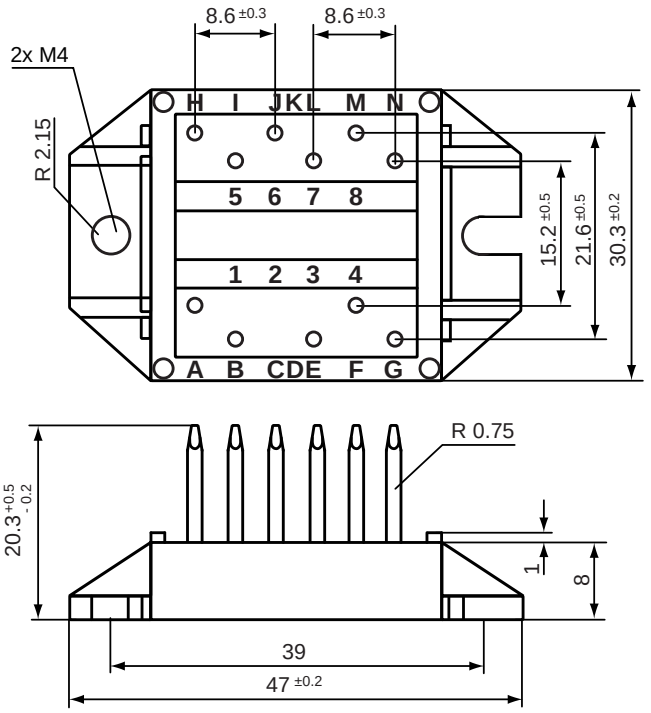

X103 V1-A-Pack Weight = 37 g

See data sheet for pin arrangement

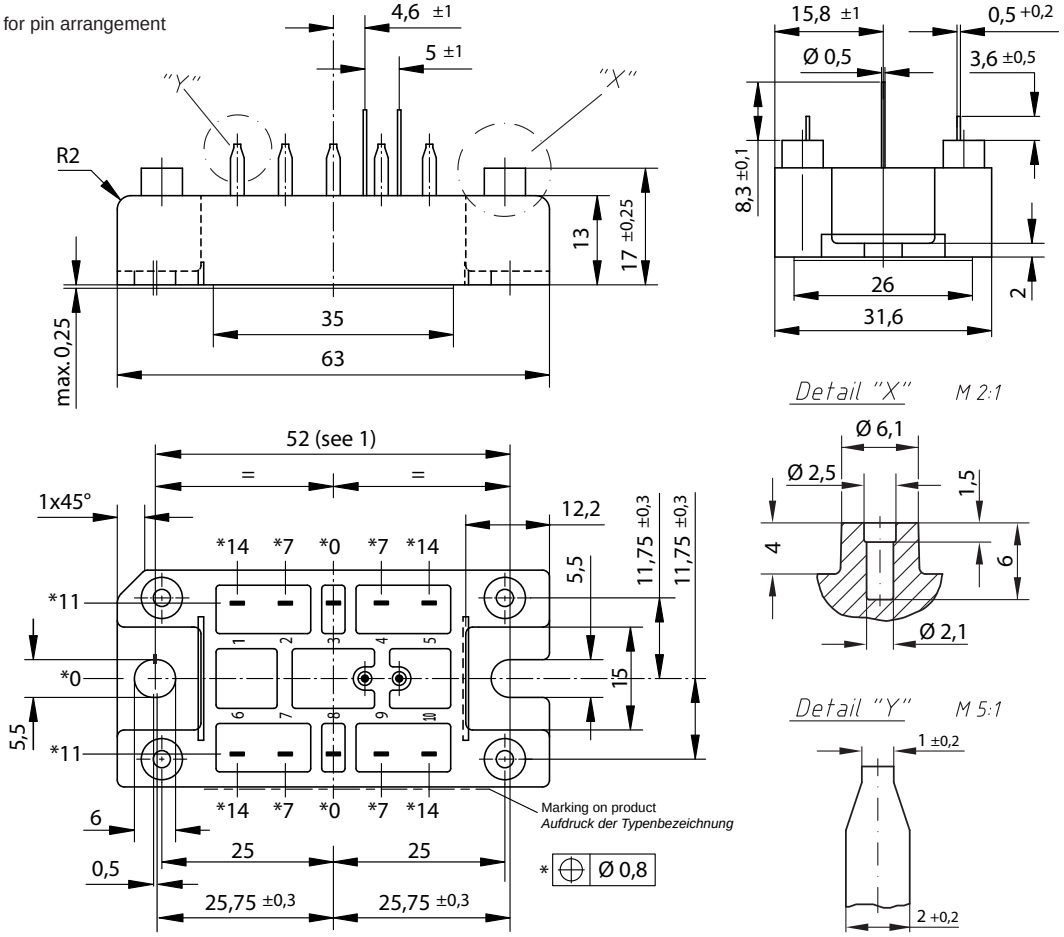

Dimensions in mm and inches (1 mm = 0.0394“)

X104 V2-Pack

Weight = 76 g

See data sheet for pin arrangement

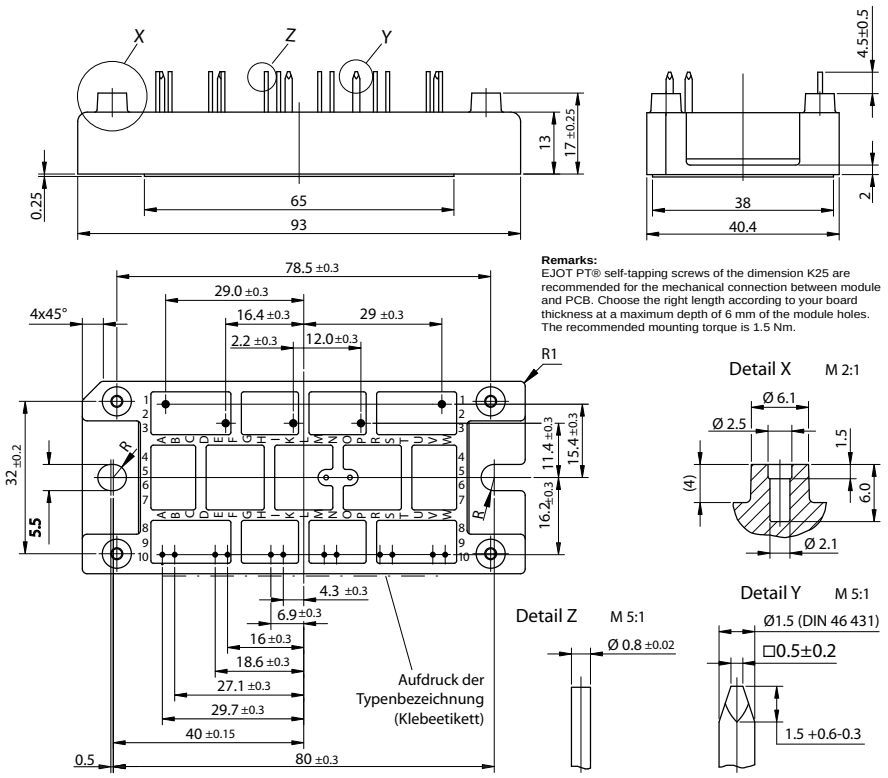

Remarks:
EJOT PT® self-tapping screws of the dimension K25 are recommended for the mechanical connection between module and PCB. Choose the right length according to your board thickness at a maximum depth of 6 mm of the module holes. The recommended mounting torque is 1.5 Nm.

X105 V1-B-Pack

Weight =
a: pin length = 31 mm 30 g
b: pin length = 16 mm 28 g

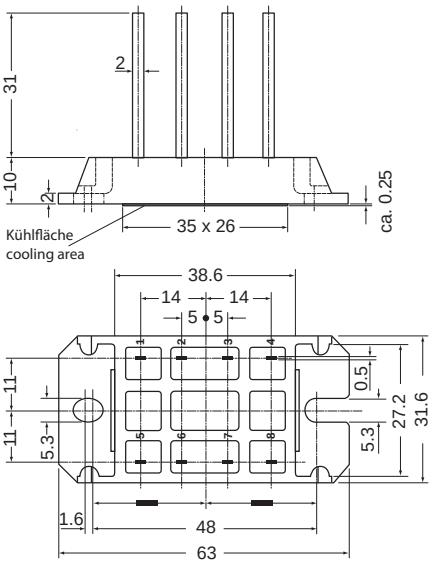

X109 Mini-Pack2B

Weight = 42 g

See data sheet for pin arrangement

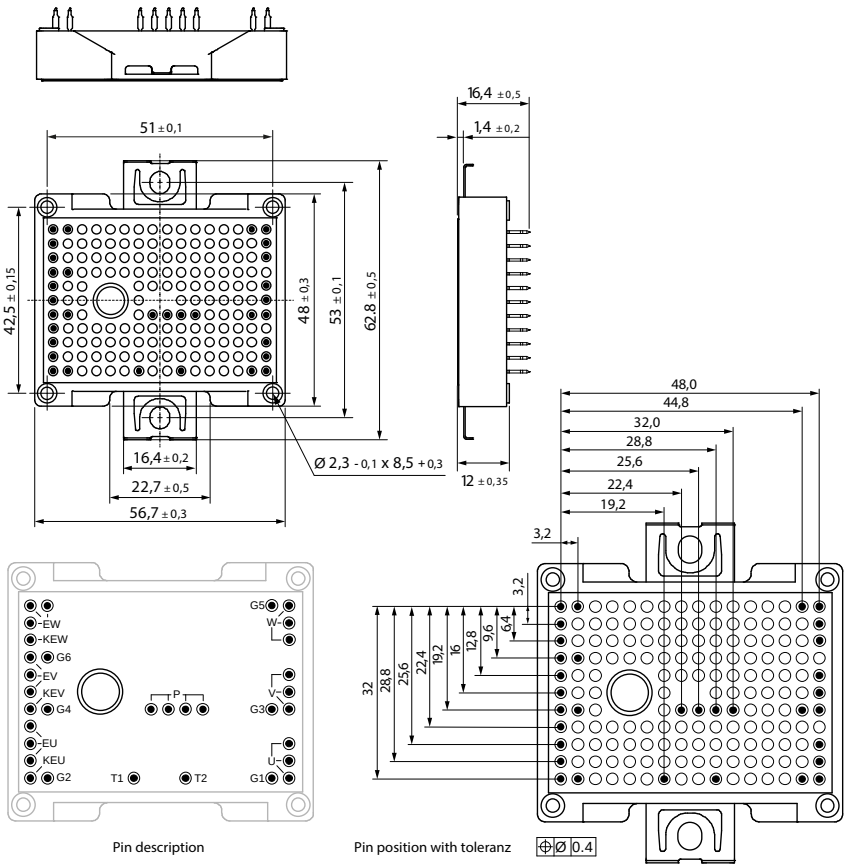

X105c V1-B-Pack

Weight = 25 g

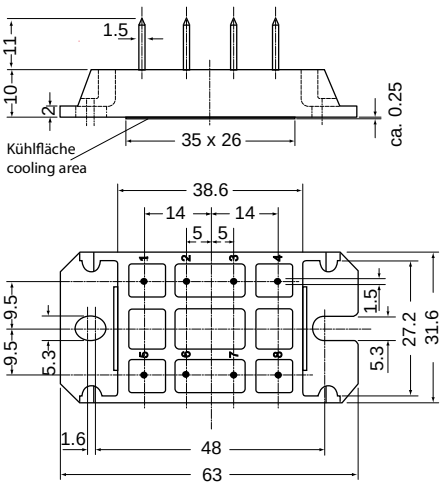

Outline drawings

Dimensions in mm and inches (1 mm = 0.0394“)

X112 E2-Pack Weight = 176 g

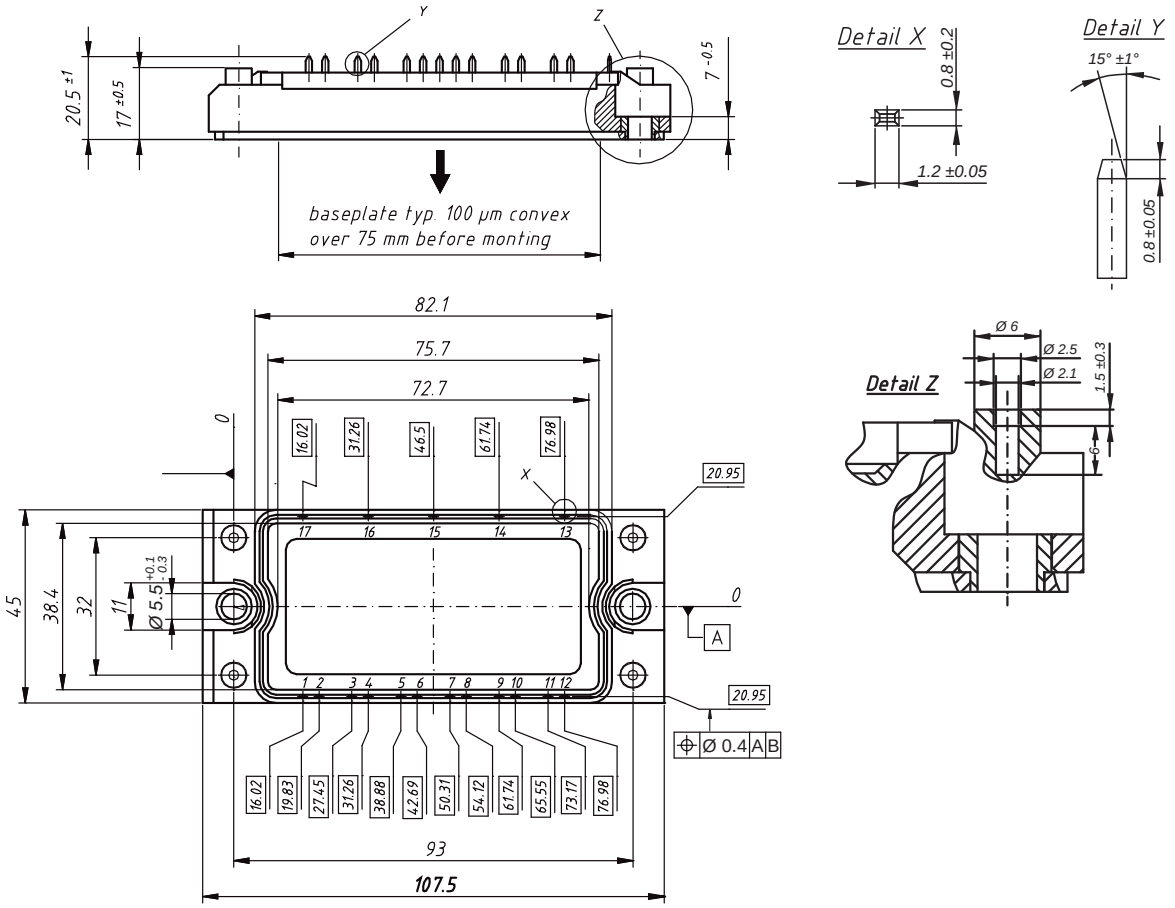

X112a E2-Pack PFP See data sheet for pin arrangement Weight = 176 g

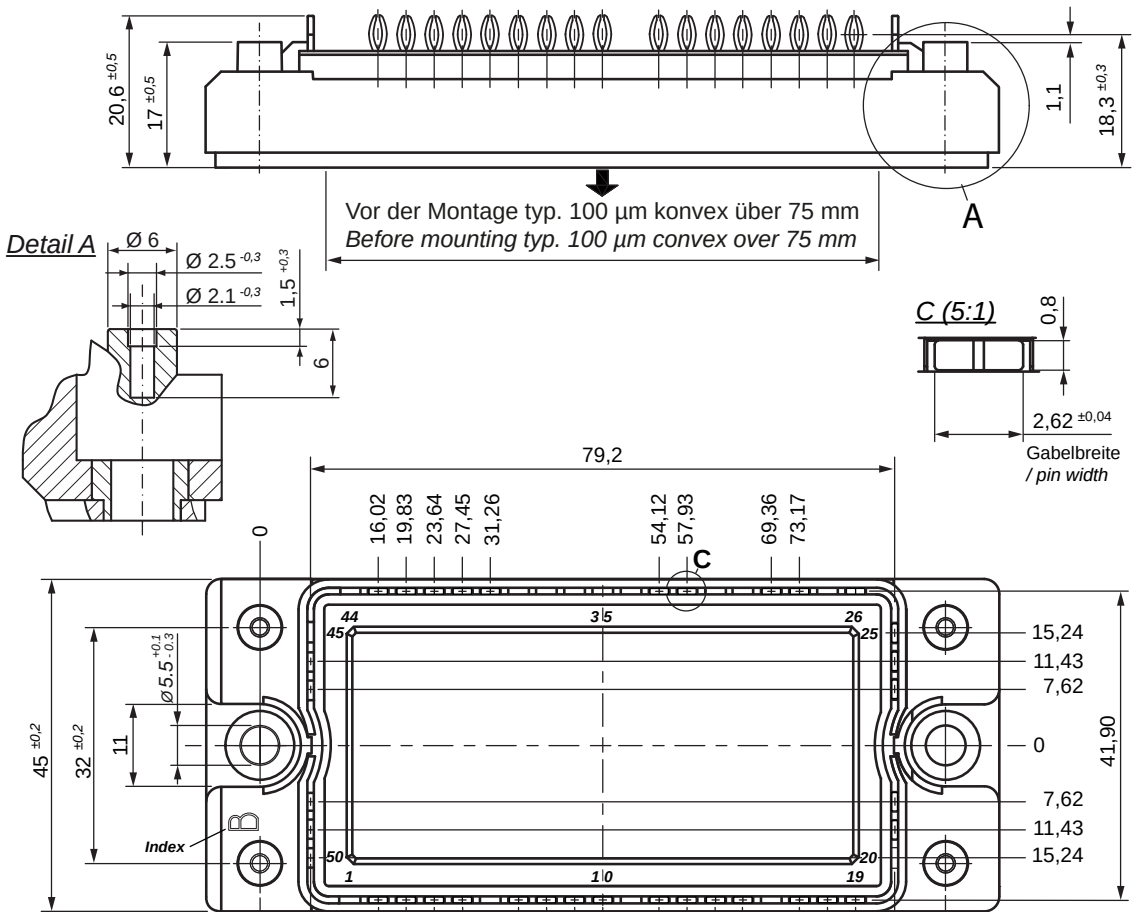

IXYS

Dimensions in mm and inches (1 mm = 0.0394“)

X113 E3-Pack

See data sheet for pin arrangement

Weight = 270 g

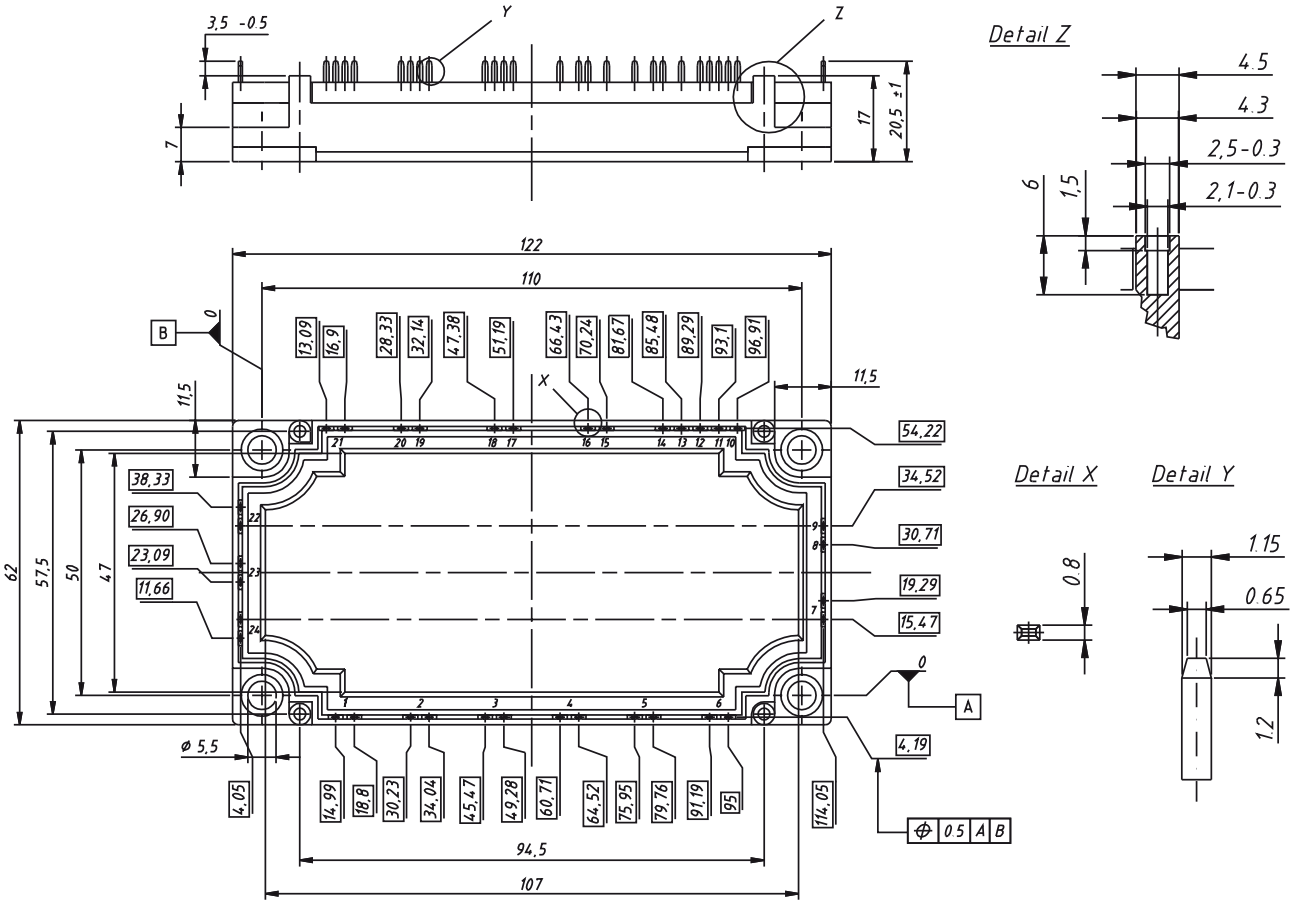

X113a E3-Pack PFP

See data sheet for pin arrangement

Weight = 270 g

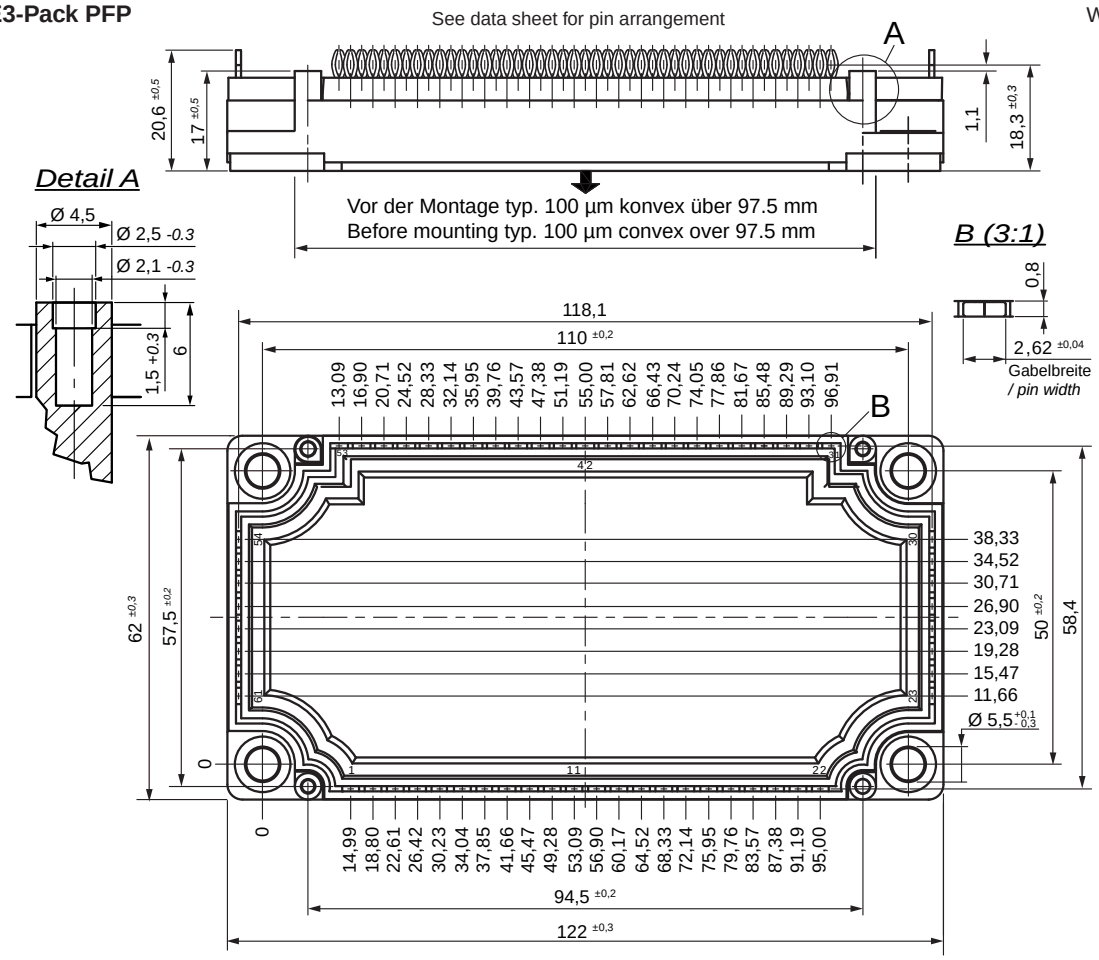

Outline drawings

Dimensions in mm and inches (1 mm = 0.0394“)

X115 FO-A Weight = 15 g

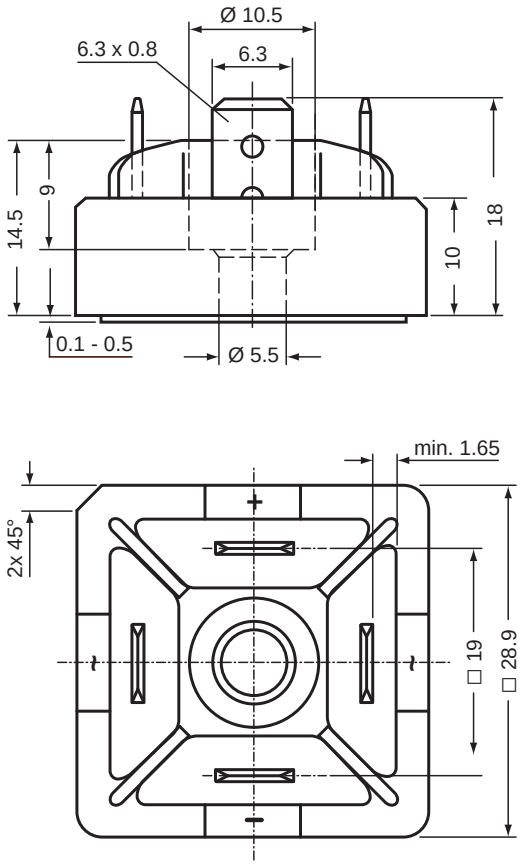

X116 FO-B Weight =
a: VUO 20 g
b: w/o terminal C (VBO) 19 g

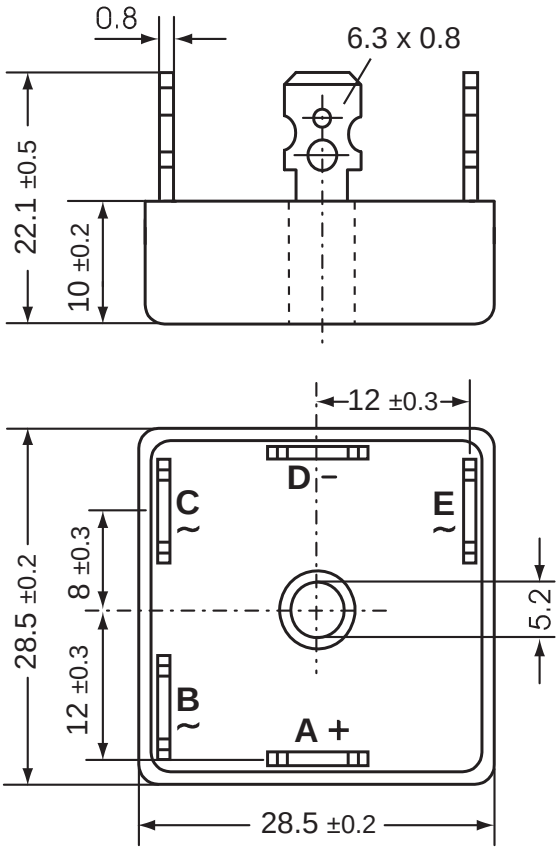

X117a FO-F-A Weight = 45 g

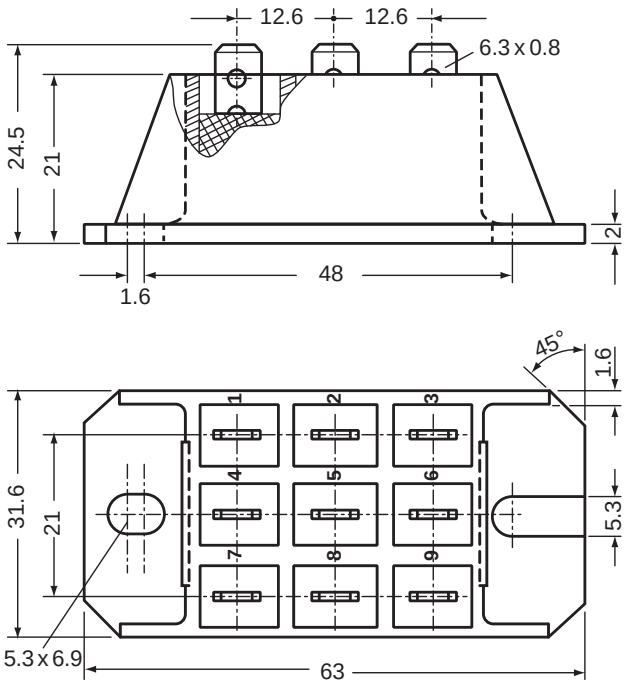

X117b FO-F-B Weight = 45 g

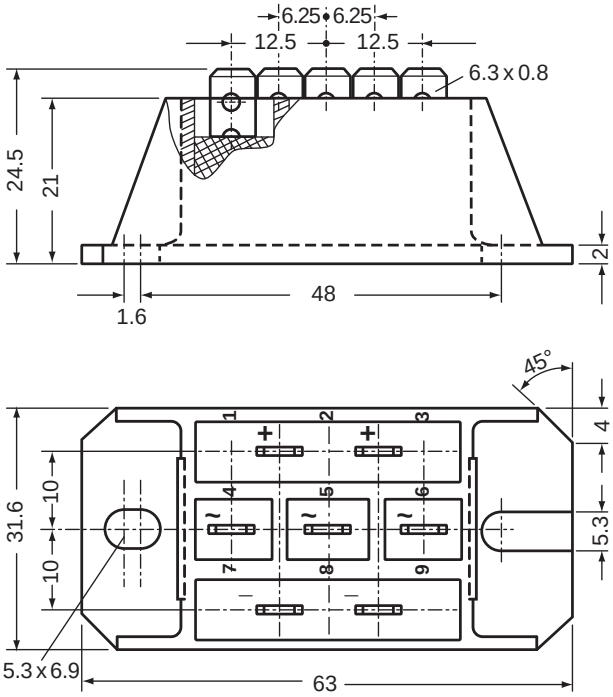

IXYS

Dimensions in mm and inches (1 mm = 0.0394“)

X118 FO-T-A

Weight = 104 g

c: w/o terminal 4, 5, & 6 (VVZ & VVZF)
d: w/o terminal 1, 2, 3, 4, 5, & 6 (VUO)

See data sheet for pin arrangement

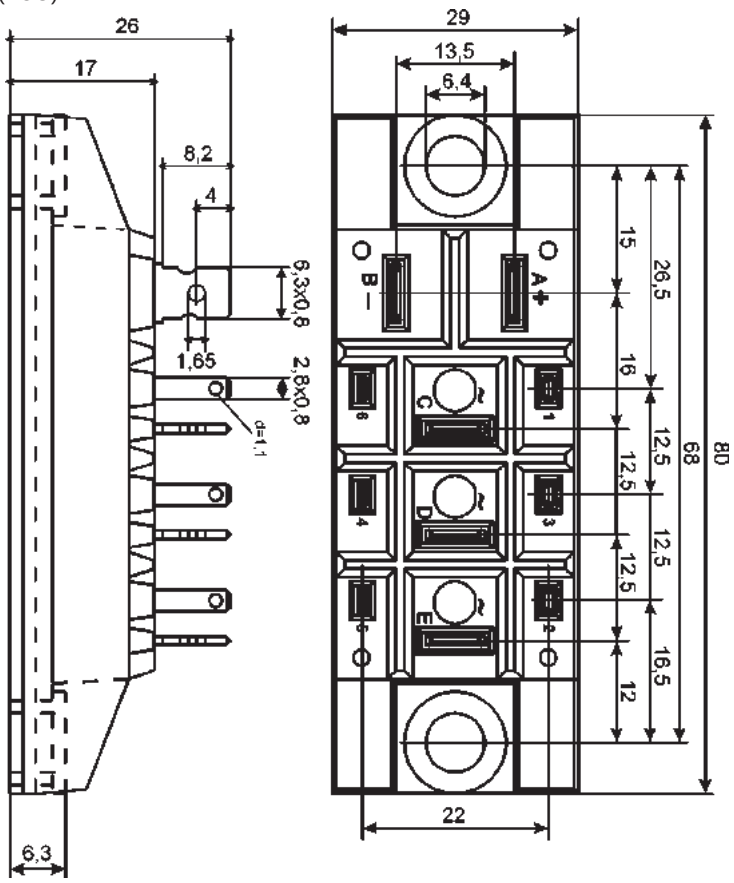

X119 PWS-A

Weight =
a: VUO 104 g
b: w/o terminal D (VBO) 100 g

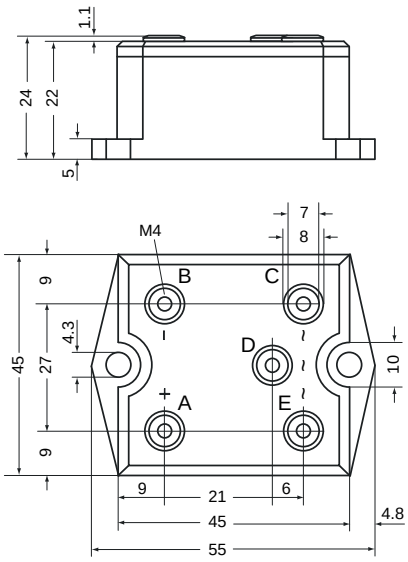

X120 PWS-B

Weight =
a: VUO 203 g
b: w/o terminal D (VBO) 193 g

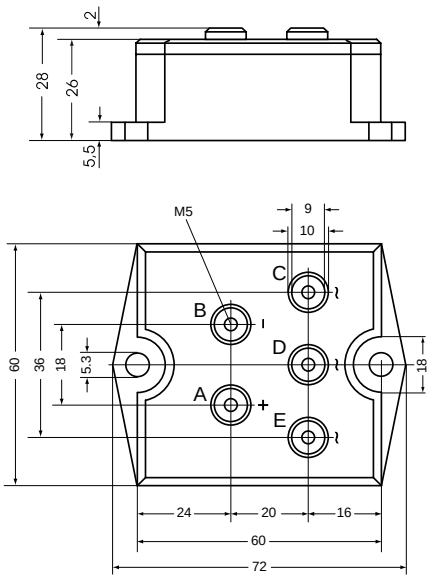

X121 PWS-C

Weight =
a: VUO 250 g
b: w/o terminal D (VBO) 237 g

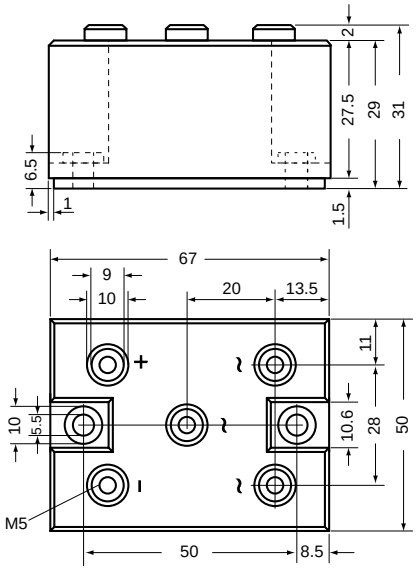

Outline drawings

IXYS

Dimensions in mm and inches (1 mm = 0.0394“)

X122 PWS-D Weight =

a: VUO	159 g
b: w/o terminal C (VBO)	153 g

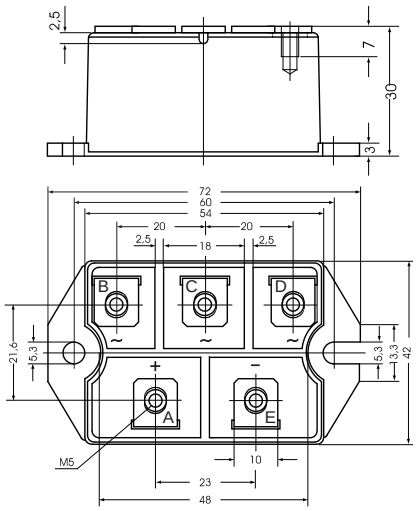

X122 PWS-D Flat Weight =

c: VUO	118 g

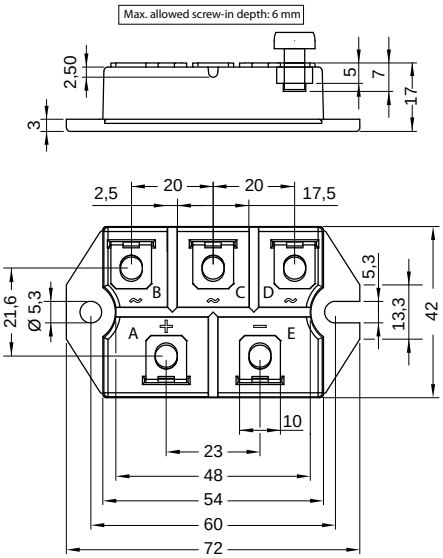

X123 PWS-E Weight =

a: VTO	284 g
b: w/o terminal 4, 5 & 6 (VVZ)	284 g
c: w/o terminal 1, 2, 3, 4, 5 & 6 (VUO)	284 g
d: w/o terminal D, 3, 4, 5 & 6 (VHF)	273 g
e: w/o terminal D, 1, 2, 3, 4, 5 & 6 (VBO)	273 g

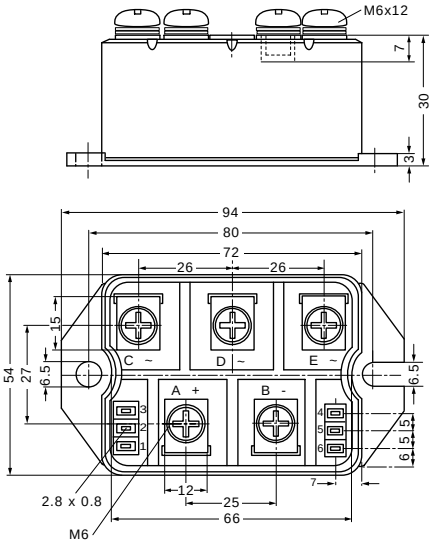

X123 PWS-E Flat Weight = 220 g

h: w/o terminal 1, 2, 3, 4, 5 & 6 (VUO)

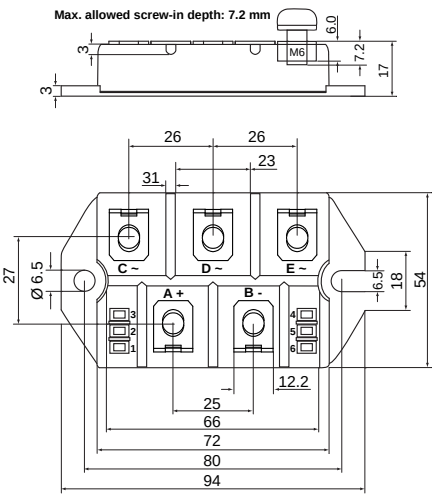

X125 TO-240 AA Weight =

a: + Kelvin contact (MCC)	81 g
b: + Kelvin contact, w/o pin 6 & 7 (MCD)	81 g
c: w/o Kelvin contact 4 & 7 (MCC)	81 g
d: w/o Kelvin contact 4, 7 & pin 6 (MCD)	81 g
e: w/o pin 4, 5, 6 & 7 (MDD)	81 g
f: w/o terminal 2 and pin 4 & 7 (VMO)	74 g
g: + Kelvin contact, w/o pin 7 (VMM)	81 g

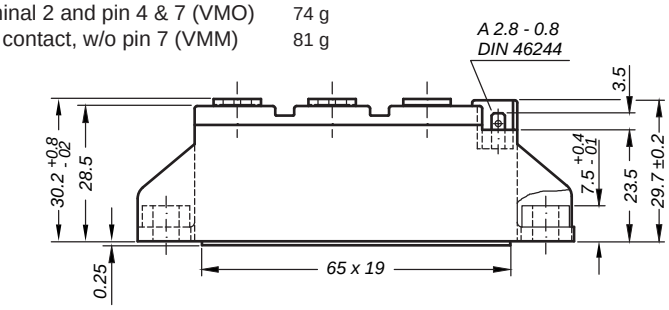

General tolerance: DIN ISO 2768 class „c“

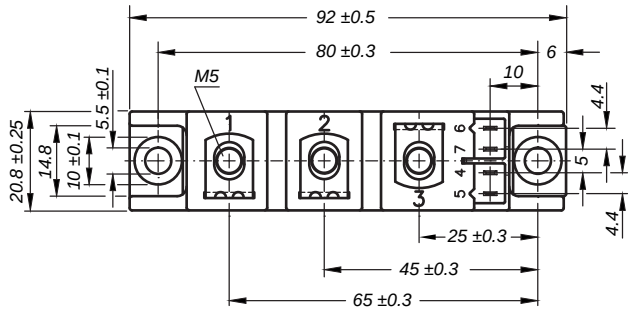

Optional accessories: Keyed gate/cathode twin plugs
Wire length: 350 mm, gate = white, cathode = red
UL 758, style 3751
*Type **ZY 200L** (L = Left for pin pair 4/5)*
*Type **ZY 200R** (R = Right for pin pair 6/7)*

Outline drawings

IXYS

Dimensions in mm and inches (1 mm = 0.0394“)

X126 Y4-M6

	Weight =
a: + Kelvin cont., w/o pin 8 up to 11 (MCC)	131 g
b: + Kelvin cont., w/o pin 6 up to 11 (MCD)	131 g
c: w/o pin 4 up to 11 (MDD)	126 g
d: w/o terminal 2 & pin 4 up to 11 (MEO)	108 g

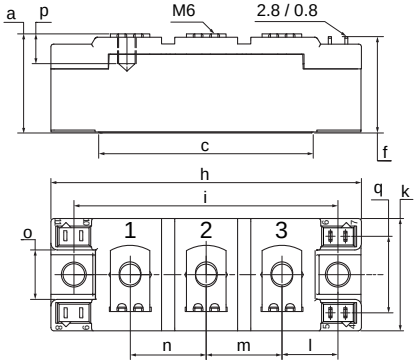

Dim.	Millimeter		Inches	
	min	max	min	max
a	30.0	30.6	1.181	1.205
c	64.0	65.0	2.520	2.559
f	28.6	29.2	1.126	1.150
h	93.5	94.5	3.681	3.720
i	79.5	80.5	3.130	3.169
j	4.8	5.2	0.189	0.205
k	33.4	34.0	1.315	1.339
l	16.7	17.3	0.657	0.681
m	22.7	23.3	0.894	0.917
n	22.7	23.3	0.894	0.917
o	14.0	15.0	0.551	0.591
p	typ. 10.5		typ. 0.413	
q	22.8	23.3	0.898	0.917

X127 Y4-M5

	Weight =
a: w/o pin 8 up to 11 (MII)	110 g
b: w/o pin 6 up to 11 (MID)	108 g
c: w/o pin 4, 5 & 8 up to 11 (MDI)	108 g

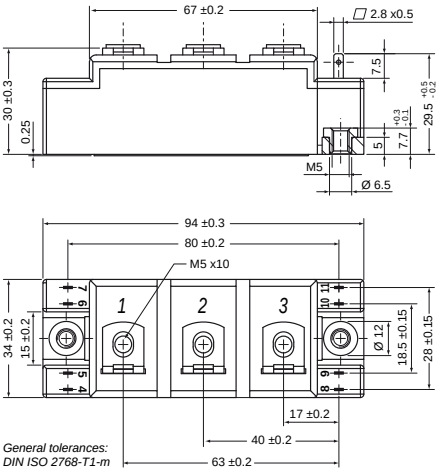

X127 Y4-M5-A

	Weight =
d: w/o pin 8 up to 11 (..PF..)	170 g
e: w/o pin 6 up to 11 (..RF..)	168 g
f: w/o pin 4, 5 & 8 up to 11 (..QF..)	166 g

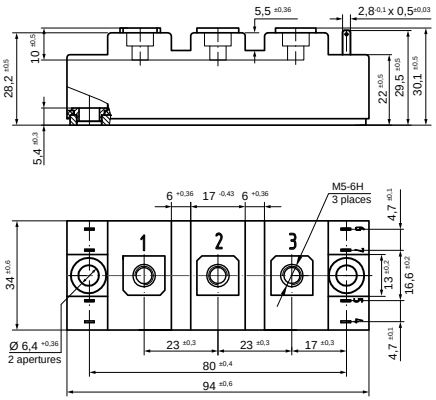

X128 Y3-DCB

	Weight =
a: w/o pin 4 up to 7 (VMM, MII)	222 g
b: w/o pin 4 up to 9 (MID)	220 g
c: w/o pin 4 up to 7, 10 & 11 (MDI)	220 g
d: w/o terminal 3 & pin 6 up to 11 (VMO)	200 g
e/f/g: see data sheet	

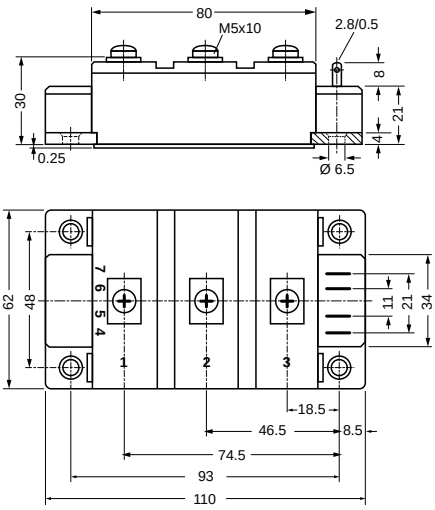

X129 Y2-DCB

	Weight =
a: + Kelvin contact (MCC)	245 g
b: + Kelvin contact, w/o pin 6 & 7 (MCD)	245 g
c: w/o pin 4, 5, 6 & 7 (MDD)	244 g

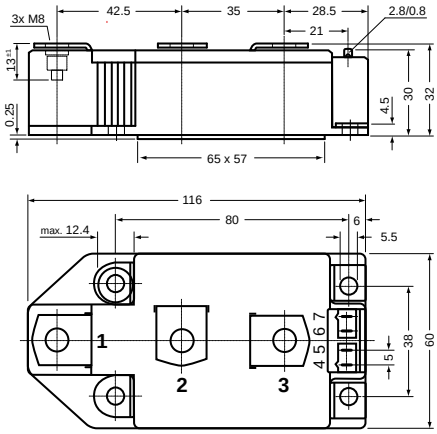

X130 Y3-Li

	Weight =
a: w/o pin 4-7, low inductance (VMM, MII)	226 g
b: w/o pin 4-9, low inductance (MID)	226 g
c: w/o pin 4-7, 10&11, low inductance (MDI)	226 g
d: w/o terminal 1&pin 6-11, low ind. (VMO)	206 g
e: w/o pin 4&5, low ind. (VMM, MII+NTC)	226 g
f: w/o pin 4, 5, 8 & 9, low ind. (MID+NTC)	226 g

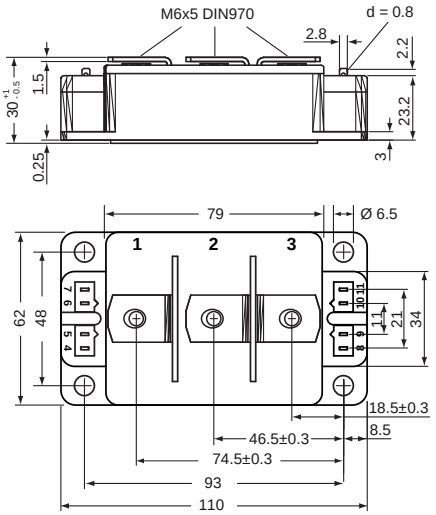

Outline drawings

Dimensions in mm and inches (1 mm = 0.0394“)

X131 Y1-CU Weight =

a: + Kelvin contact (MCC) 680 g
b: + Kelvin contact, w/o pin 6&7 (MCD) 680 g
c: w/o pin 4, 5, 6 & 7 (MDD) 680 g

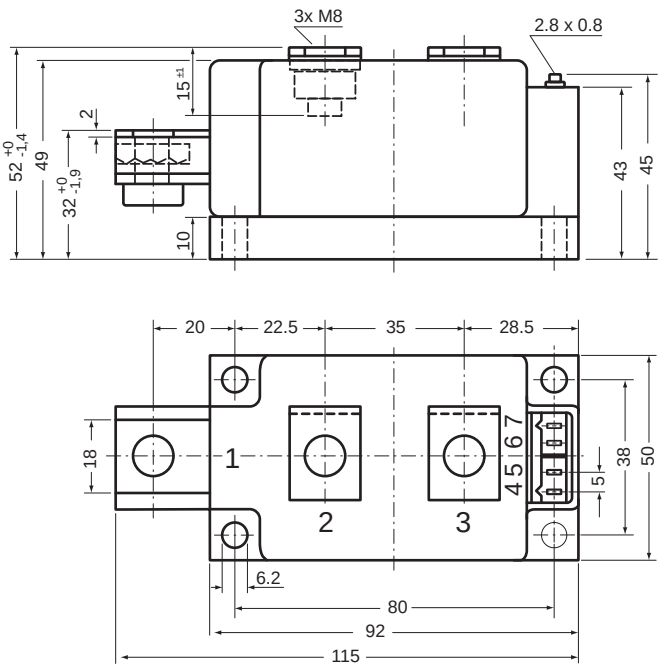

Optional accessories for modules
Keyed gate/cathode twin plugs with wire length = 350 mm, gate = white, cathode = red
Type ZY 180L (L = Left for pin pair 4/5) } UL 758, style 3751
Type ZY 180R (R = Right for pin pair 6/7) }

X132 Y1-2-CU Weight = 650 g

a: + Kelvin contact w/o pin 6&7 (MCO)
b: w/o pin 4, 5, 6 & 7 (MDO)

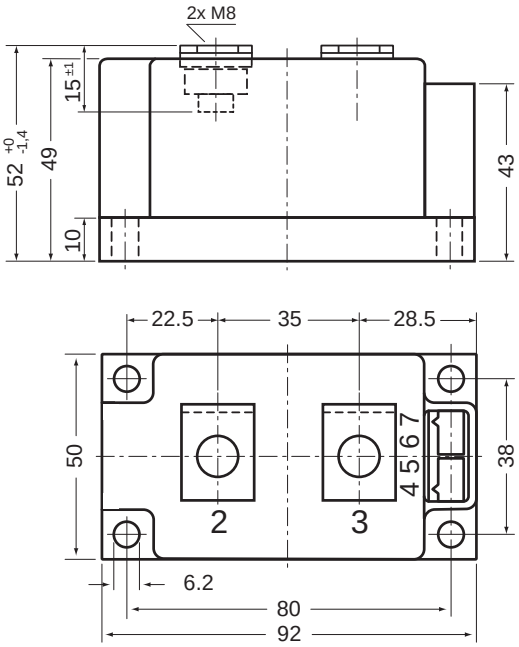

X141 SimBus A Weight = 152 g

a: + Kelvin contact (MCC)
b: + Kelvin contact, w/o pin 7 & 8 (MCD)
c: w/o pin 5, 6, 7 & 8 (MDD)

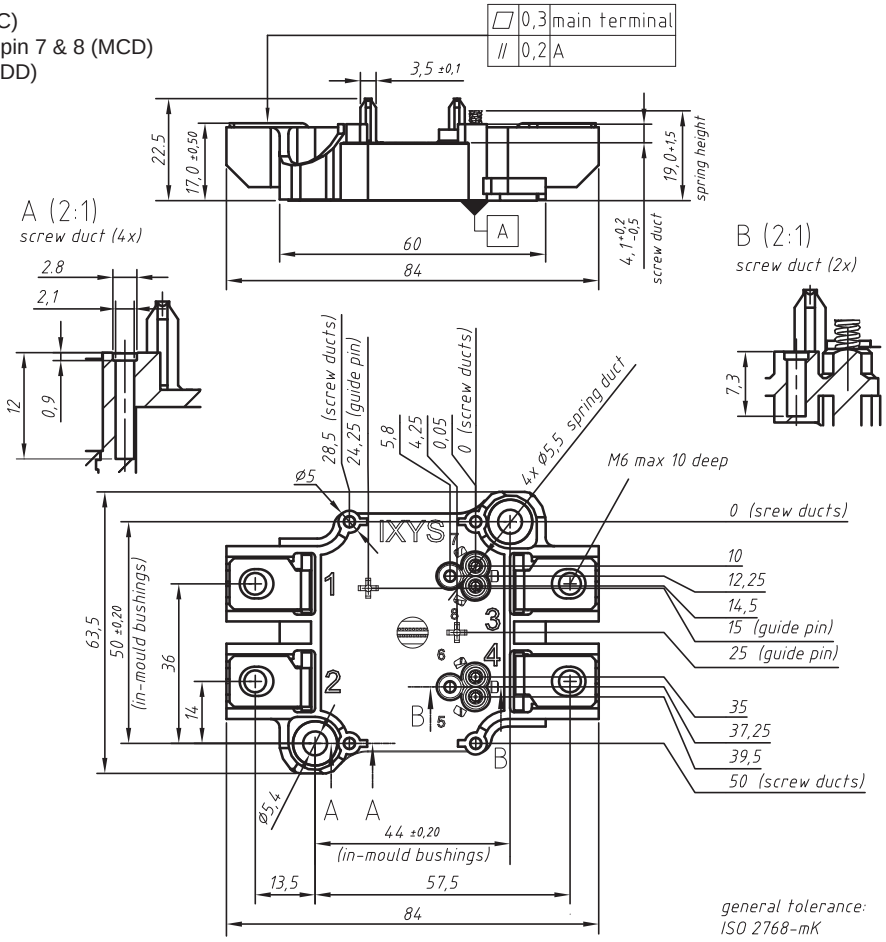

Dimensions in mm and inches (1 mm = 0.0394“)

X142 ComPack Weight = 500 g

a: + Kelvin contact (MCC)
b: + Kelvin contact, w/o pin 6 & 7 (MCD)
c: w/o pin 4, 5, 6 & 7 (MDD)

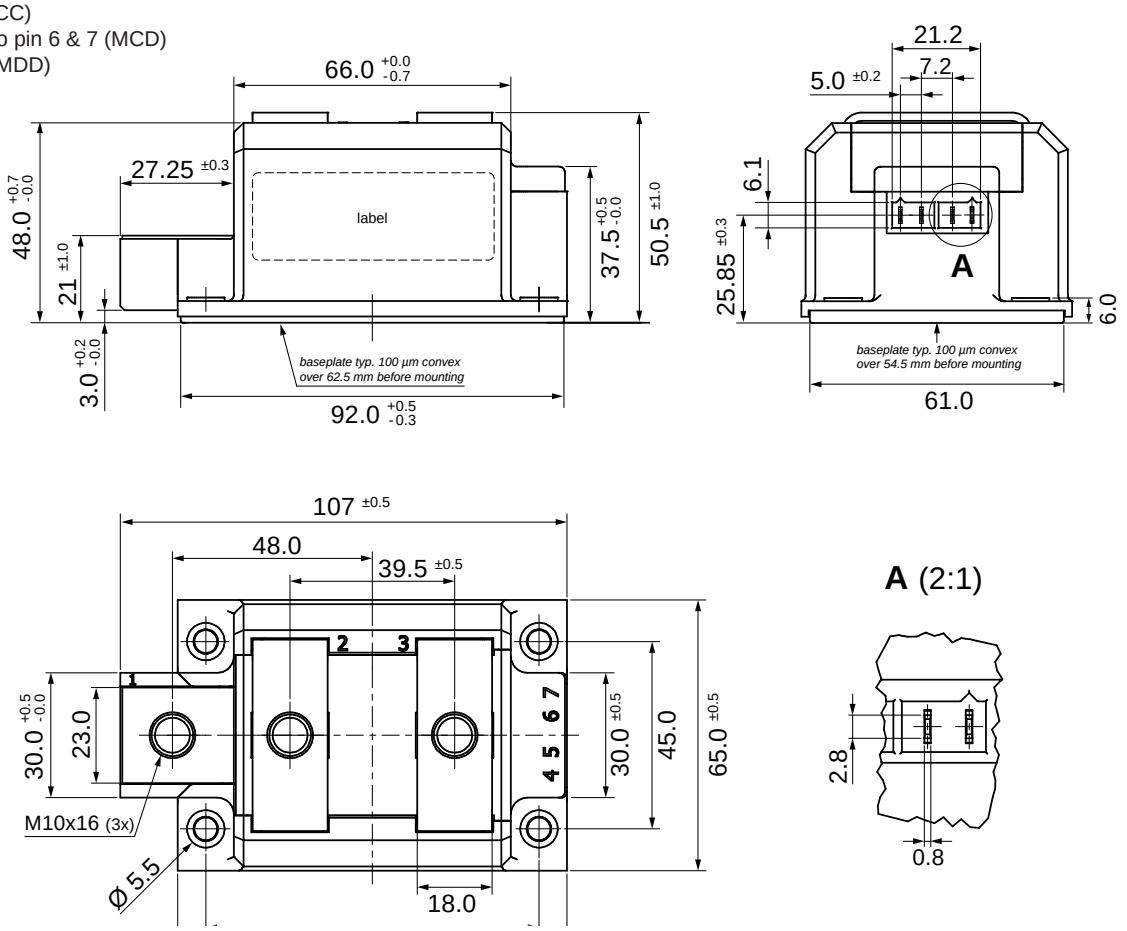

X143 SimBus F Pin configuration see data sheets Weight = 150 g

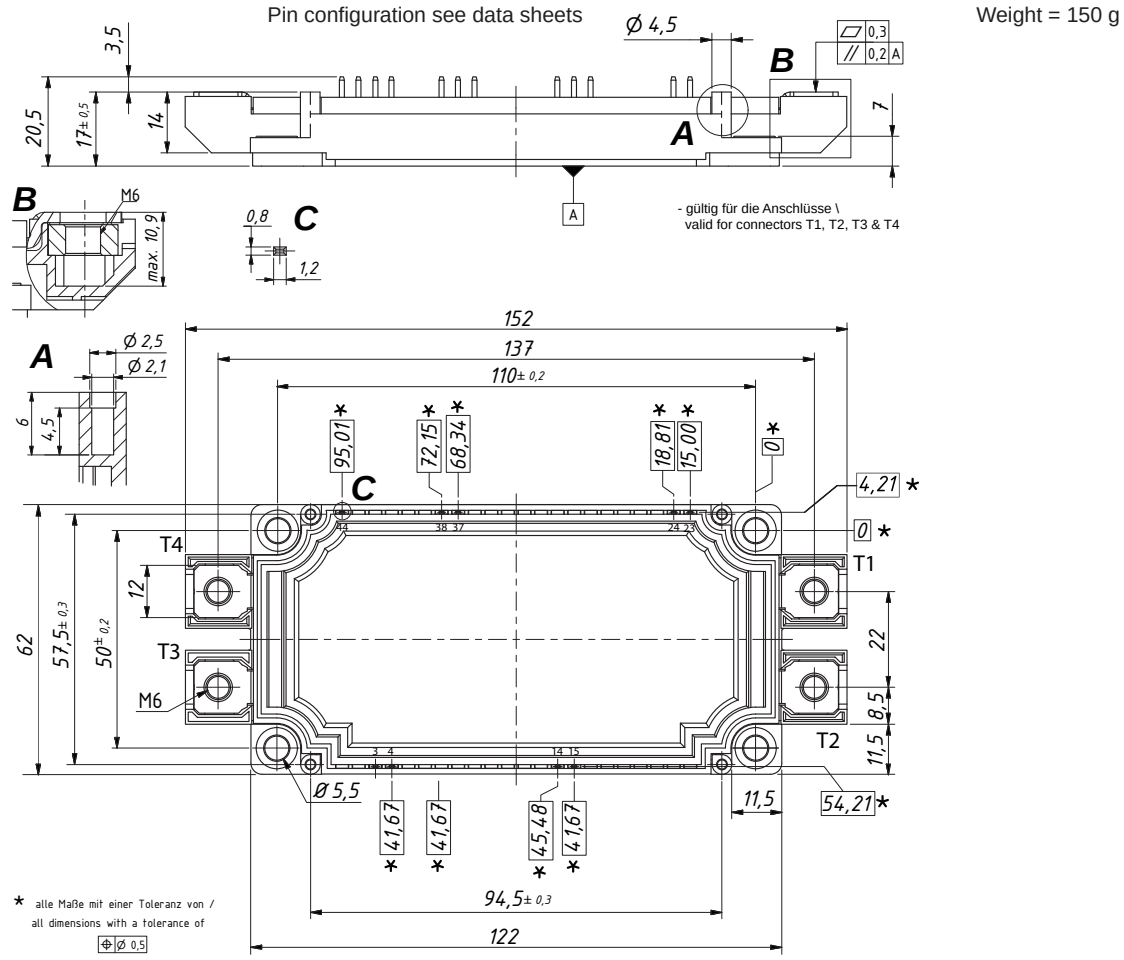

Outline drawings

Dimensions in mm and inches (1 mm = 0.0394“)

X143a SimBus F PFP Pin configuration see data sheets Weight = 150 g

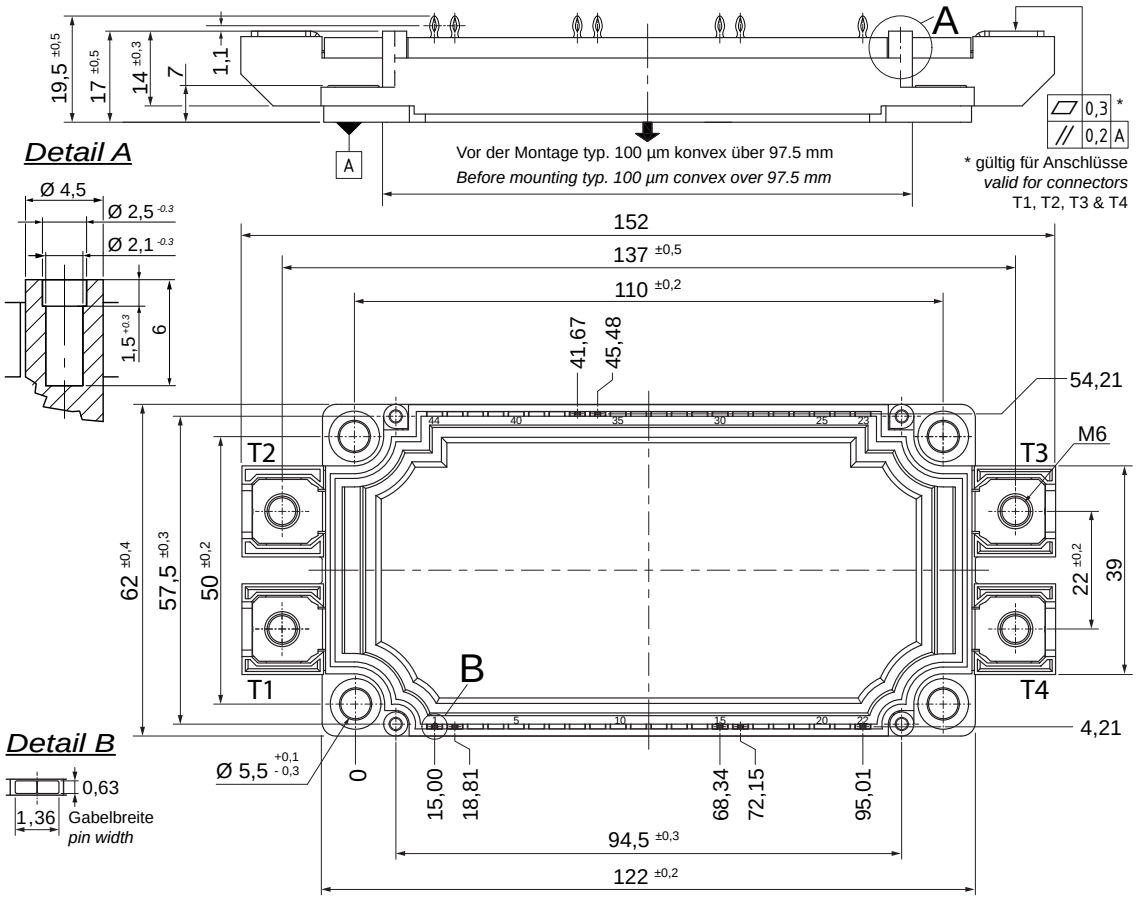

Outline drawings

Dimensions in mm and inches (1 mm = 0.0394“)

X200 Metal-can Weight = 2.5 g

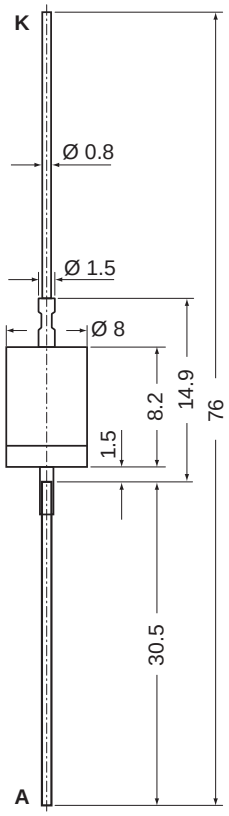

X201 FP-Case (oilproof) Weight = 0.9 g

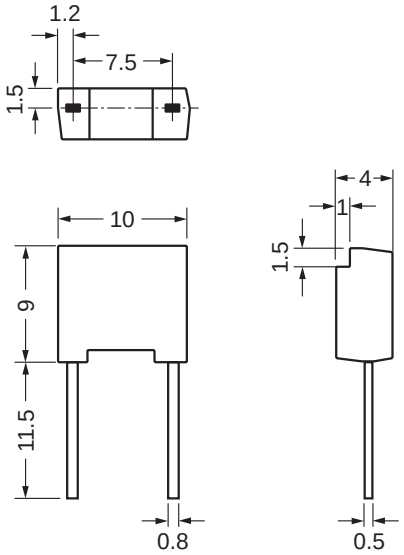

X202 BOD-Package Weight = 9.5 g

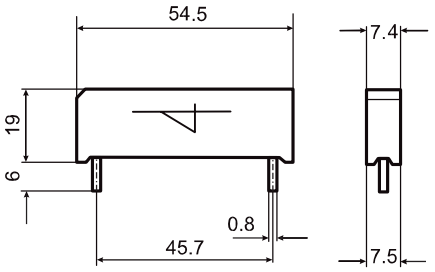

X204 DO-203 AA [M] (DO-4) Weight = 6 g

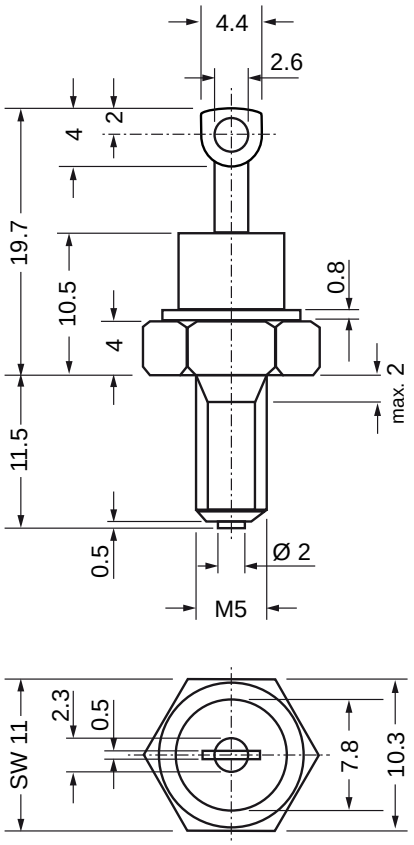

X205 DO-203 AA [UNF] (DO-4) Weight = 5.5 g

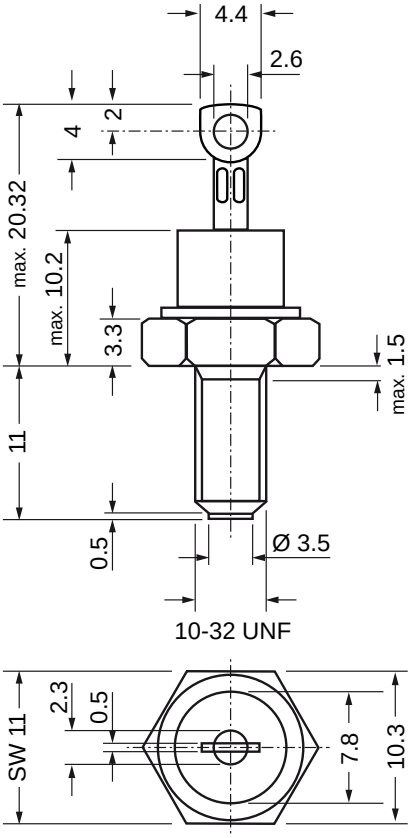

X206a DO-203 AB [UNF] (DO-5)
X206b DO-203 AB [M] (DO-5)
Weight = 14 g

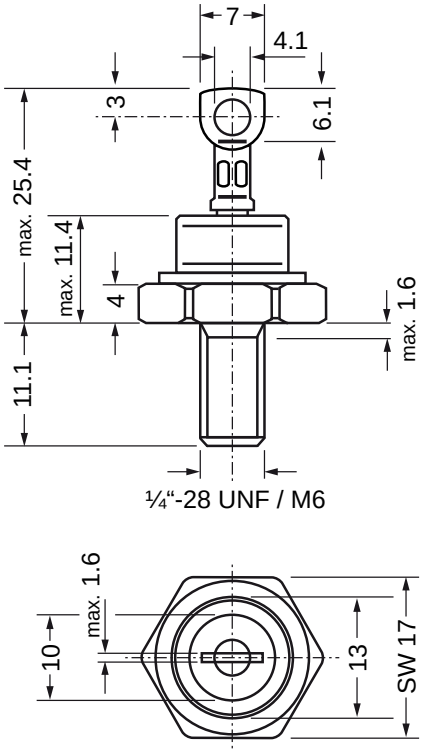

Outline drawings

Dimensions in mm and inches (1 mm = 0.0394“)

X207 DO-203 AB (DO-5) Weight = 20 g

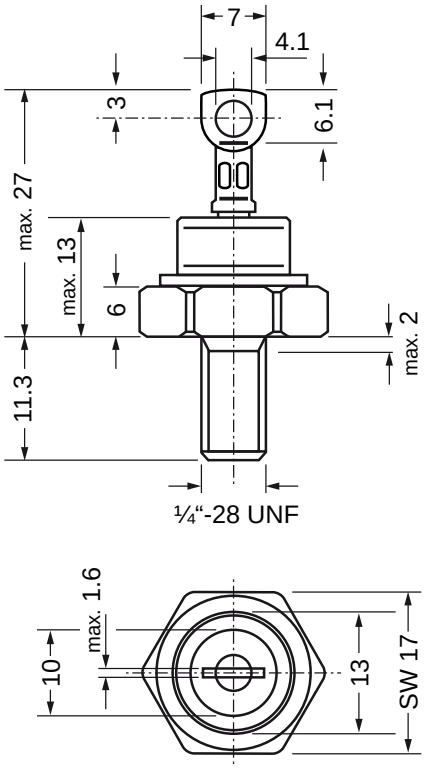

X209 TO-208 AA (TO-48) Weight = 11.6 g

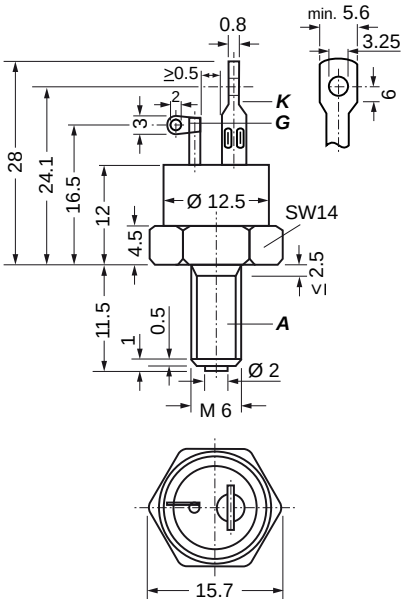

X210 TO-208 AC (TO-65) Weight = 21.7 g

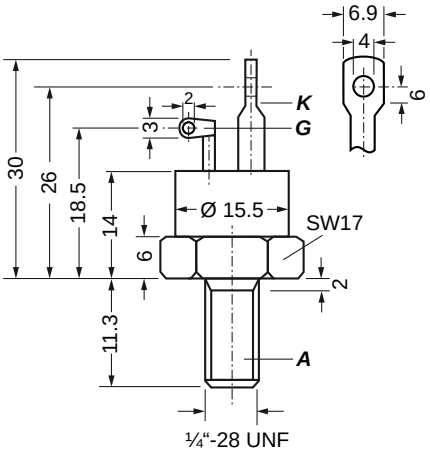

X251 UGE-single Weight = 125 g

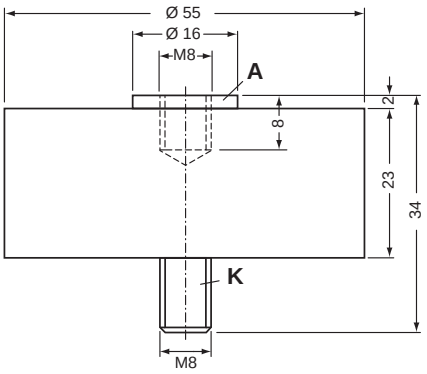

X252 UG Weight = 155 g

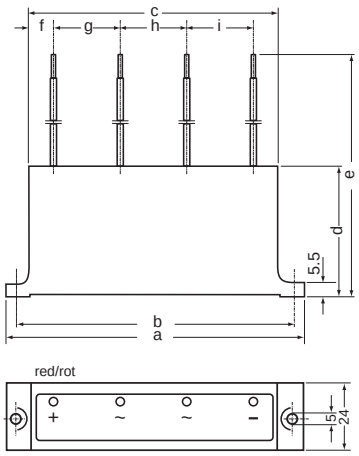

X253a UG Weight = 310 g

b: w/o middle terminal

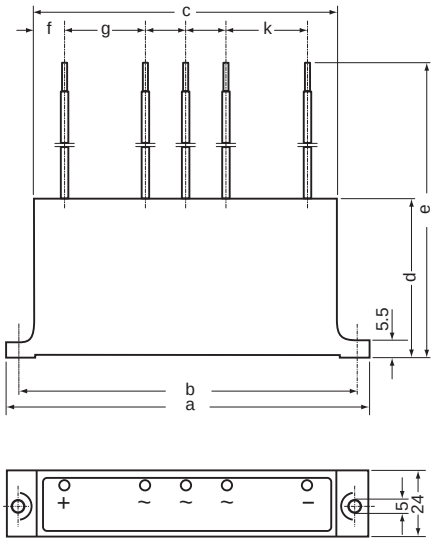

Type	a	b	c	d	e	f	g	h	i	k
UGB 3132 AD	80	70	57	58.5	260	6	15	15	15	
UGB 6124 AG	135	125	112	58.5	260	11	32.5	25	32.5	
UGD 6123 AG	135	125	112	58.5	260	8	30	18	18	30
UGD 8124 AG	135	125	112	58.5	260	8	30	18	18	30

Dimensions in mm

Outline drawings

Dimensions in mm and inches (1 mm = 0.0394“)

X254 VG-A Weight = 61 g

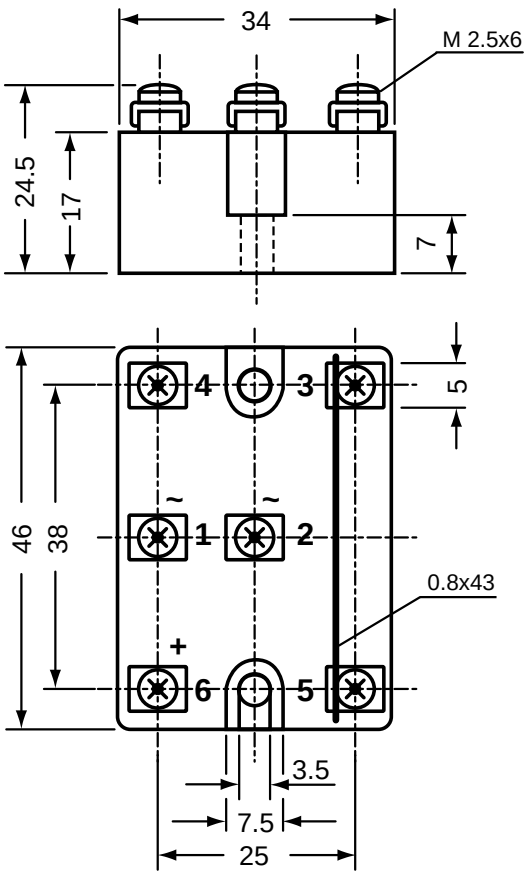

X255 VG-B Weight = 87 g

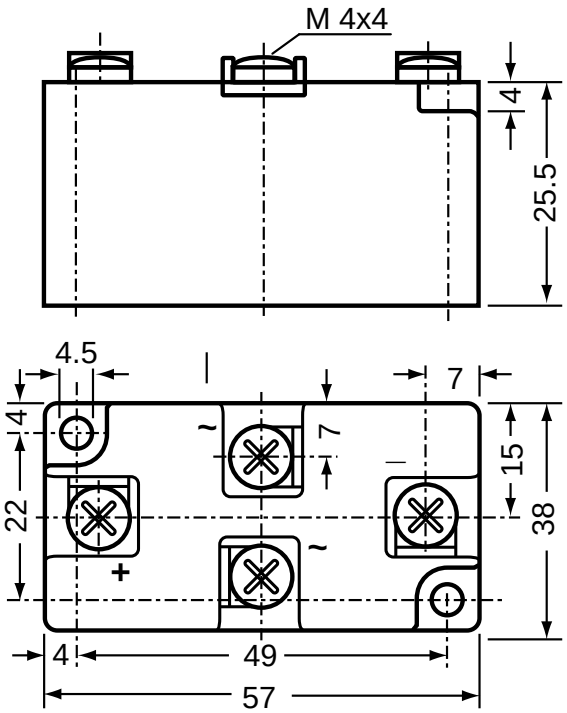

D5 DE475

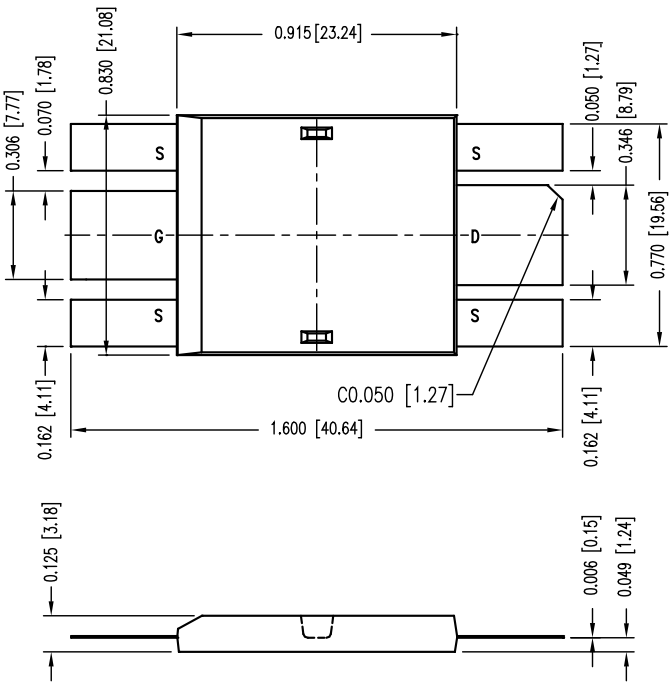

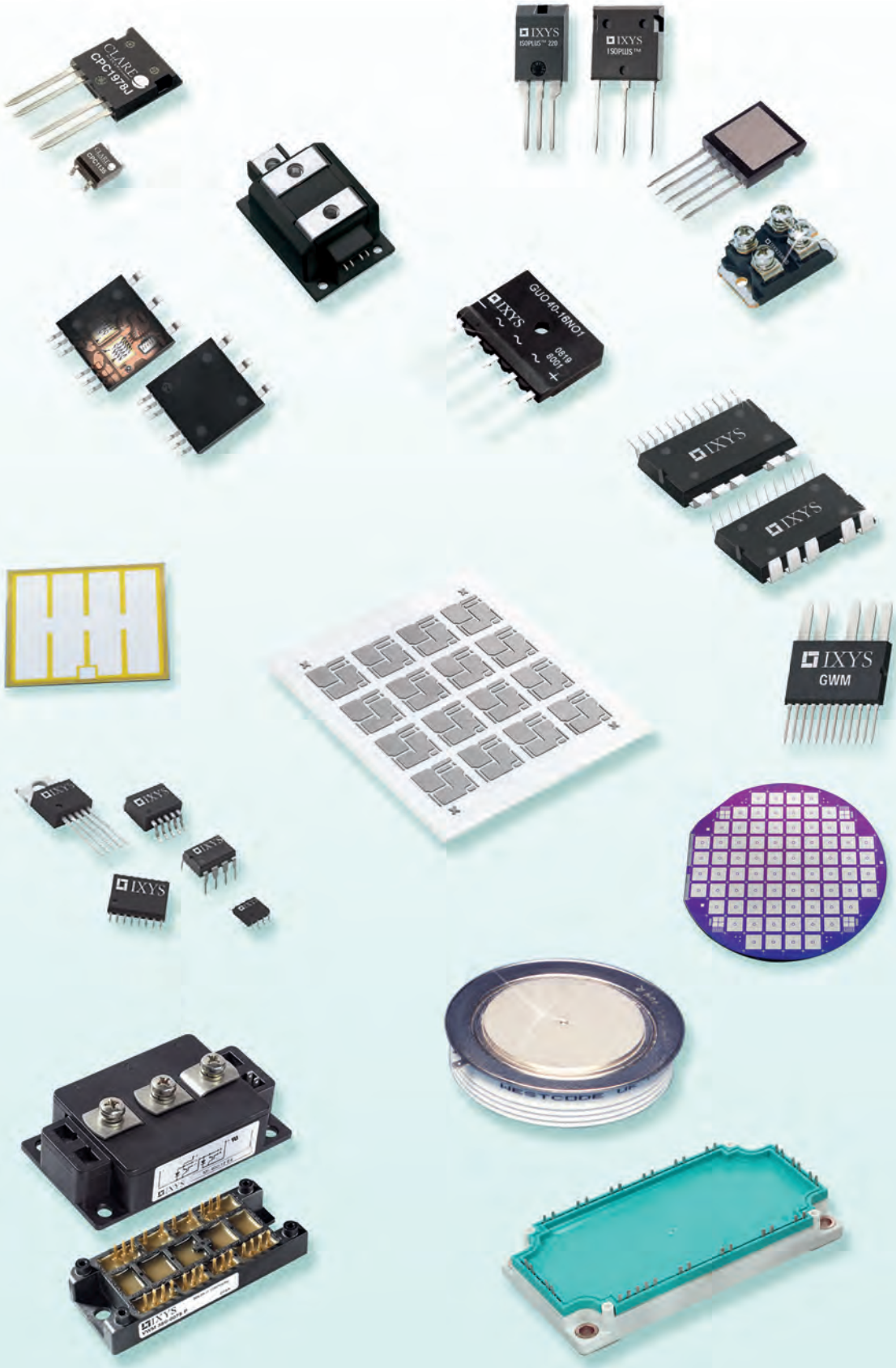
CLARE
CPC1978J
IXYS
ISOPLUS™ 220
IXYS
ISOPLUS™
IXYS
GUO 40-18NO1
IXYS
IXYS
IXYS
GWM
IXYS
IXYS
IXYS
IXYS

модуль ixys, igbt, мост Минск +375447584780
www.fotorele.net www.tiristor.by радиодетали, электронные компоненты
email minsk17@tut.by tel.+375 29 758 47 80 мтс

Мы не работаем с частными (физическими) лицами.
Мы работаем только с юридическими лицами(организациями) и ИП и только по безналичному расчёту.
каталог, описание, технические, характеристики, datasheet, параметры, маркировка,габариты, фото

IXYS КАТАЛОГ 2017г. Минск

IGBT, MOSFET модуль

SiC

IPM (SKiiP)

тиристорно - диодный модуль

мост диодный, однофазный, трёхфазный,

диоды, тиристоры,

драйверы

охладители, радиатор

каталог документация, datasheet, описание, технические характеристики скачать