модуль, igbt, мост диодный Минск +375447584780

www.fotorele.net www.tiristor.by радиодетали, электронные компоненты

email minsk17@tut.by tel.+375 29 758 47 80 мтс

Мы не работаем с частными (физическими) лицами.

Мы работаем только с юридическими лицами(организациями) и ИП и только по безналичному расчёту.

каталог, описание, технические, характеристики, datasheet, параметры, маркировка,габариты, фото

КАТАЛОГ МИНСК

модуль, igbt, модуль диодный

купить, продажа

L1-Series & L-Series 6-Pac & 7-Pac 600V Intelligent Power Modules,

(Refer to device datasheets at www.pwrx.com for test test conditions.)

PM50RL1C060

PM50CL1A060, PM50RL1A060, PM75CL1A060, PM75RL1A060, PM100CL1A060, PM100RL1A060, PM150CL1A060, PM150RL1A060

PM50CL1B060, PM50RL1B060, PM75CL1B060, PM75RL1B060, PM100CL1B060, PM100RL1B060, PM150CL1B060, PM150RL1B060

MAXIMUM RATINGS (IGBT Inverter Sector)					ELECTRICAL CHARACTERISTICS (IGBT Inverter Sector)										PROTECTION TRIP LEVELS			THERMAL CHARACTERISTICS				Outline Drawings	
									Brake	Inductive Load Switching Times									IGBT	DIODES			
Type	V_{CES} Volts	I_C Amperes	P_d Watts	V_{RMS} Isolation Volts	Typ. $V_{CE(SAT)}$ Volts	V_{EC} Volts	I_{CES} mA	$V_{CC(PROT)}$ Volts	I_C Amperes	$t_{(on)}$ µsec	t_{rr} µsec	$t_{c(on)}$ µsec	$t_{(off)}$ µsec	$t_{c(off)}$ µsec	SC Amperes	OT °C	UV Volts	$R_{th(c-f)}$ °C/W	$R_{th(j-c)}$ °C/W	$R_{th(j-c)}$ °C/W	Weight Grams	Number	Page
L1-Series Modules																							
PM50CL1A060	600	50	284	2500	1.75	1.70	1.0	400	–	0.8	0.4	0.4	1.0	0.3	100	135	12	0.038	0.44	0.75	380	1	D-6
PM50CL1B060	600	50	284	2500	1.75	1.70	1.0	400	–	0.8	0.4	0.4	1.0	0.3	100	135	12	0.038	0.44	0.75	340	2	D-6
PM50RL1A060	600	50	284	2500	1.75	1.70	1.0	400	50	0.8	0.4	0.4	1.0	0.3	100	135	12	0.038	0.44	0.75	380	1	D-6
PM50RL1B060	600	50	284	2500	1.75	1.70	1.0	400	50	0.8	0.4	0.4	1.0	0.3	100	135	12	0.038	0.44	0.75	340	2	D-6
PM50RL1C060	600	50	168	2500	1.75	1.70	1.0	400	50	0.8	0.4	0.4	1.0	0.3	100	135	12	0.085	0.74	1.28	135	3	D-6
PM75CL1A060	600	75	337	2500	1.75	1.70	1.0	400	–	0.8	0.4	0.4	1.0	0.3	150	135	12	0.038	0.37	0.63	380	1	D-6
PM75CL1B060	600	75	337	2500	1.75	1.70	1.0	400	–	0.8	0.4	0.4	1.0	0.3	150	135	12	0.038	0.37	0.63	340	2	D-6
PM75RL1A060	600	75	337	2500	1.75	1.70	1.0	400	50	0.8	0.4	0.4	1.0	0.3	150	135	12	0.038	0.37	0.63	380	1	D-6
PM75RL1B060	600	75	337	2500	1.75	1.70	1.0	400	50	0.8	0.4	0.4	1.0	0.3	150	135	12	0.038	0.37	0.63	340	2	D-6
PM100CL1A060	600	100	390	2500	1.75	1.70	1.0	400	–	0.8	0.4	0.4	1.0	0.3	200	135	12	0.038	0.32	0.52	380	1	D-6
PM100CL1B060	600	100	390	2500	1.75	1.70	1.0	400	–	0.8	0.4	0.4	1.0	0.3	200	135	12	0.038	0.32	0.52	340	2	D-6
PM100RL1A060	600	100	390	2500	1.75	1.70	1.0	400	50	0.8	0.4	0.4	1.0	0.3	200	135	12	0.038	0.32	0.52	380	1	D-6
PM100RL1B060	600	100	390	2500	1.75	1.70	1.0	400	50	0.8	0.4	0.4	1.0	0.3	200	135	12	0.038	0.32	0.52	340	2	D-6
PM150CL1A060	600	150	500	2500	1.75	1.70	1.0	400	–	0.8	0.4	0.4	1.0	0.3	300	135	12	0.038	0.25	0.41	380	1	D-6
PM150CL1B060	600	150	500	2500	1.75	1.70	1.0	400	–	0.8	0.4	0.4	1.0	0.3	300	135	12	0.038	0.25	0.41	340	2	D-6
PM150RL1A060	600	150	500	2500	1.75	1.70	1.0	400	75	0.8	0.4	0.4	1.0	0.3	300	135	12	0.038	0.25	0.41	380	1	D-6
PM150RL1B060	600	150	500	2500	1.75	1.70	1.0	400	75	0.8	0.4	0.4	1.0	0.3	300	135	12	0.038	0.25	0.41	340	2	D-6
PM200CL1A060	600	200	625	2500	1.75	1.70	1.0	400	–	0.8	0.4	0.4	1.0	0.3	400	135	12	0.023	0.2	0.3	800	4	D-7
PM200RL1A060	600	200	625	2500	1.75	1.70	1.0	400	100	0.8	0.4	0.4	1.0	0.3	400	135	12	0.023	0.2	0.3	800	4	D-7
PM300CL1A060	600	300	833	2500	1.75	1.70	1.0	400	–	0.8	0.4	0.4	1.0	0.3	600	135	12	0.023	0.15	0.23	800	4	D-7
PM300RL1A060	600	300	833	2500	1.75	1.70	1.0	400	150	0.8	0.4	0.4	1.0	0.3	600	135	12	0.023	0.15	0.23	800	4	D-7
L-Series Modules																							
PM450CLA060	600	450	1041	2500	1.70	2.60	1.0	400	–	1.0	0.2	0.4	2.2	0.6	900	135	12	0.014	0.12	0.19	1250	5	D-7
PM600CLA060	600	600	1785	2500	1.70	2.60	1.0	400	–	1.0	0.2	0.4	2.2	0.6	1200	135	12	0.014	0.07	0.11	1250	5	D-7

PM50CL1A060, PM50CL1B060, PM75CL1A060, PM75CL1B060, PM100CL1A060, PM100CL1B060, PM150CL1A060, PM150CL1B060, PM200CL1A060, PM300CL1A060

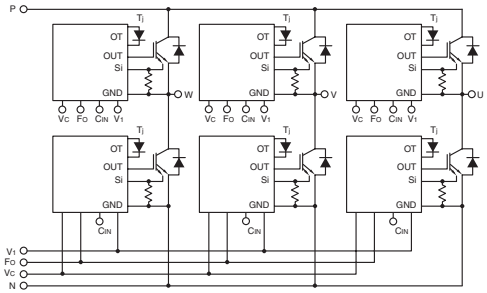

PM50RL1A060, PM50RL1B060, PM50RL1C060, PM75RL1A060, PM75RL1B060, PM100RL1A060, PM100RL1B060, PM150RL1A060, PM150RL1B060, PM200RL1A060, PM300RL1A060

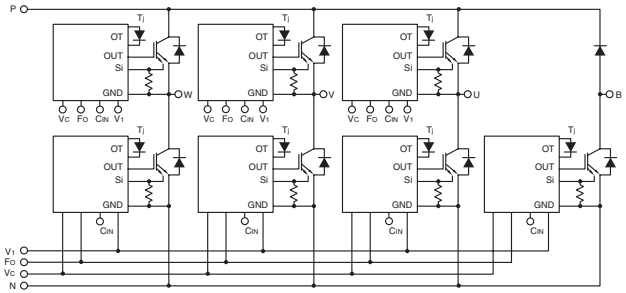

PM450CLA060, PM600CLA060

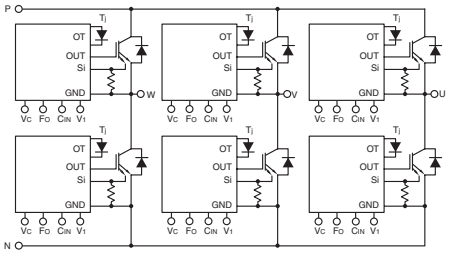

PM200CL1A060, PM200RL1A060, PM300CL1A060, PM300RL1A060

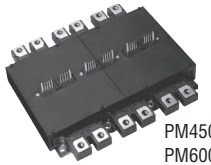

PM450CLA060, PM600CLA060

L1-Series & L-Series 6-Pac & 7-Pac 1200V Intelligent Power Modules,

(Refer to device datasheets at www.pwrx.com for test test conditions.)

PM25RL1A120

PM25CL1A120, PM25RL1A120, PM50CL1A120, PM50RL1A120, PM75CL1A120, PM75RL1A120

PM25CL1B120,PM25RL1B120, PM50CL1B120, PM50RL1B120, PM75CL1B120, PM75RL1B120

MAXIMUM RATINGS (IGBT Inverter Sector)					ELECTRICAL CHARACTERISTICS (IGBT Inverter Sector)										PROTECTION TRIP LEVELS			THERMAL CHARACTERISTICS					
										Inductive Load Switching Times												Outline Drawings	
Type	V_{CES} Volts	I_C Amperes	P_d Watts	V_{RMS} Isolation Volts	Typ. $V_{CE(SAT)}$ Volts	V_{EC} Volts	I_{CES} mA	$V_{CC(PROT)}$ Volts	Brake I_C Amperes	$t_{(on)}$ µsec	t_{rr} µsec	$t_{c(on)}$ µsec	$t_{(off)}$ µsec	$t_{c(off)}$ µsec	SC Amperes	OT °C	UV Volts	$R_{th(c-f)}$ °C/W	IGBT $R_{th(j-c)}$ °C/W	DIODES $R_{th(j-c)}$ °C/W	Weight Grams	Number	Page
L1-Series Modules																							
PM25CL1A120	1200	25	128	2500	1.65	2.30	1.0	800	-	0.8	0.3	0.4	1.2	0.4	50	135	12	0.038	0.97	1.6	380	1	D-6
PM25CL1B120	1200	25	128	2500	1.65	2.30	1.0	800	-	0.8	0.3	0.4	1.2	0.4	50	135	12	0.038	0.97	1.6	340	2	D-6
PM25RL1A120	1200	25	128	2500	1.65	2.30	1.0	800	25	0.8	0.3	0.4	1.2	0.4	50	135	12	0.038	0.97	1.6	380	1	D-6
PM25RL1B120	1200	25	128	2500	1.65	2.30	1.0	800	25	0.8	0.3	0.4	1.2	0.4	50	135	12	0.038	0.97	1.6	340	2	D-6
PM25RL1C120	1200	25	178	2500	1.65	2.30	1.0	800	25	0.8	0.3	0.4	1.5	0.4	50	135	12	0.085	0.7	1.18	135	3	D-6
PM50CL1A120	1200	50	462	2500	1.65	2.30	1.0	800	-	0.8	0.3	0.4	1.2	0.4	100	135	12	0.038	0.27	0.47	380	1	D-6
PM50CL1B120	1200	50	462	2500	1.65	2.30	1.0	800	-	0.8	0.3	0.4	1.2	0.4	100	135	12	0.038	0.27	0.47	340	2	D-6
PM50RL1A120	1200	50	462	2500	1.65	2.30	1.0	800	25	0.8	0.3	0.4	1.2	0.4	100	135	12	0.038	0.27	0.47	380	1	D-6
PM50RL1B120	1200	50	462	2500	1.65	2.30	1.0	800	25	0.8	0.3	0.4	1.2	0.4	100	135	12	0.038	0.27	0.47	340	2	D-6
PM75CL1A120	1200	75	595	2500	1.65	2.30	1.0	800	-	0.8	0.3	0.4	1.2	0.4	150	135	12	0.038	0.21	0.36	380	1	D-6
PM75CL1B120	1200	75	595	2500	1.65	2.30	1.0	800	-	0.8	0.3	0.4	1.2	0.4	150	135	12	0.038	0.21	0.36	340	2	D-6
PM75RL1A120	1200	75	595	2500	1.65	2.30	1.0	800	50	0.8	0.3	0.4	1.2	0.4	150	135	12	0.038	0.21	0.36	380	1	D-6
PM75RL1B120	1200	75	595	2500	1.65	2.30	1.0	800	50	0.8	0.3	0.4	1.2	0.4	150	135	12	0.038	0.21	0.36	340	2	D-6
PM100CL1A120	1200	100	657	2500	1.65	2.30	1.0	800	-	0.8	0.3	0.4	1.2	0.4	200	135	12	0.023	0.19	0.31	800	4	D-7
PM100RL1A120	1200	100	657	2500	1.65	2.30	1.0	800	50	0.8	0.3	0.4	1.2	0.4	200	135	12	0.023	0.25	0.41	800	4	D-7
PM150CL1A120	1200	150	833	2500	1.65	2.30	1.0	800	-	0.8	0.3	0.4	1.2	0.4	300	135	12	0.023	0.19	0.31	800	4	D-7
PM150RL1A120	1200	150	833	2500	1.65	2.30	1.0	800	75	0.8	0.3	0.4	1.2	0.4	300	135	12	0.023	0.19	0.31	800	4	D-7
L-Series Modules																							
PM200CLA120	1200	200	1041	2500	1.80	2.80	1.0	800	-	1.0	0.5	0.4	2.3	0.7	400	135	12	0.014	0.12	0.2	1250	5	D-7
PM300CLA120	1200	300	1562	2500	1.80	2.80	1.0	800	-	1.0	0.5	0.4	2.3	0.7	600	135	12	0.014	0.08	0.13	1250	5	D-7
PM450CLA120	1200	450	2500	2500	1.80	2.80	1.0	800	-	1.0	0.5	0.4	2.3	0.7	900	135	12	0.014	0.05	0.09	1250	5	D-7

PM25CL1A120, PM25CL1B120, PM50CL1A120, PM50CL1B120, PM75CL1A120, PM75CL1B120, PM100CL1A120, PM150CL1A120

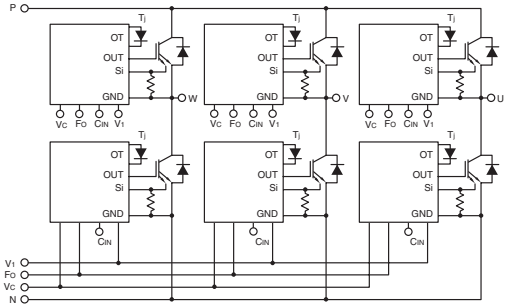

PM25RL1A120, PM25RL1B120, PM25RL1C120, PM50RL1A120, PM50RL1B120, PM75RL1A120, PM75RL1B120. PM100RL1A120, PM150RL1A120

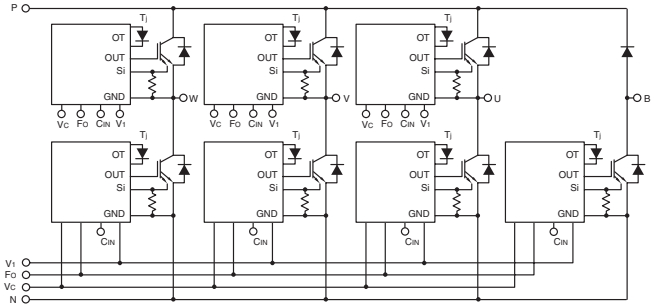

PM200CLA120, PM300CLA120, PM450CLA120

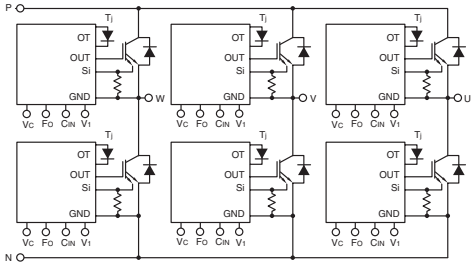

PM100CL1A120, PM100RL1A120, PM150CL1A120, PM150RL1A120

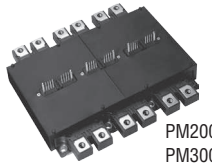

PM200CLA120, PM300CLA120, PM450CLA120

V1-Series Dual Intelligent Power Modules,

(Refer to device datasheets at www.pwrx.com for test test conditions.)

PM400DV1A060, PM600DV1A060, PM200DV1A120, PM300DV1A120, PM450DV1A120

PM800DV1B060

MAXIMUM RATINGS (IGBT Inverter Sector)					ELECTRICAL CHARACTERISTICS (IGBT Inverter Sector)									PROTECTION TRIP LEVELS			THERMAL CHARACTERISTICS					
									Inductive Load Switching Times												Outline Drawings	
Type	V_{CES} Volts	I_C Amperes	P_d Watts	V_{RMS} Isolation Volts	Typ. $V_{CE(SAT)}$ Volts	V_{EC} Volts	I_{CES} mA	$V_{CC(PROT)}$ Volts	$t_{(on)}$ µsec	t_{rr} µsec	$t_{c(on)}$ µsec	$t_{(off)}$ µsec	$t_{c(off)}$ µsec	SC Amperes	OT °C	UV Volts	$R_{th(c-f)}$ °C/W	IGBT $R_{th(j-c)}$ °C/W	DIODES $R_{th(j-c)}$ °C/W	Weight Grams	Number	Page
600V Dual Modules																						
PM400DV1A060	600	400	1262	2500	1.75	1.75	1.0	400	0.8	0.4	0.4	1.0	0.3	600	135	12	0.016	0.099	0.153	510	6	D-7
PM600DV1A060	600	600	1712	2500	1.75	1.70	1.0	400	0.8	0.3	0.4	1.0	0.3	900	135	12	0.016	0.073	0.109	510	6	D-7
PM800DV1B060	600	800	2500	2500	1.85	1.70	1.0	400	0.8	0.25	0.4	1.4	0.3	1200	135	12	0.014	0.05	0.09	720	7	D-8
1200V Dual Modules																						
PM200DV1A120	1200	200	1388	2500	1.65	2.30	1.0	800	0.8	0.3	0.4	1.2	0.4	300	135	12	0.016	0.09	0.146	510	6	D-7
PM300DV1A120	1200	300	1785	2500	1.65	2.30	1.0	800	0.8	0.3	0.4	1.2	0.4	450	135	12	0.016	0.07	0.11	510	6	D-7
PM450DV1A120	1200	450	2232	2500	1.65	2.30	1.0	800	0.8	0.3	0.4	1.2	0.4	675	135	12	0.016	0.056	0.079	510	6	D-7

V1-Series, Duals

PM400DV1A060, PM600DV1A060, PM800DV1B060,
PM200DV1A120, PM300DV1A120, PM450DVIA120

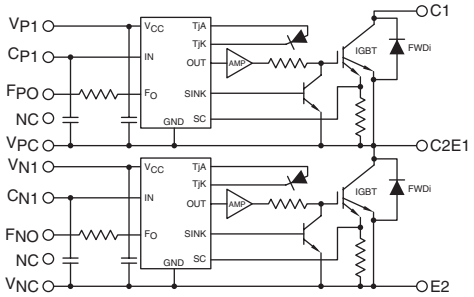

1 PM25CL1A120, PM25RL1A120, PM50CL1A060, PM50CL1A120, PM50RL1A060, PM50RL1A120, PM75CL1A060, PM75CL1A120, PM75RL1A060,PM75RL1A120,PM100CL1A060, PM100RL1A060, PM150CL1A060, PM150RL1A060

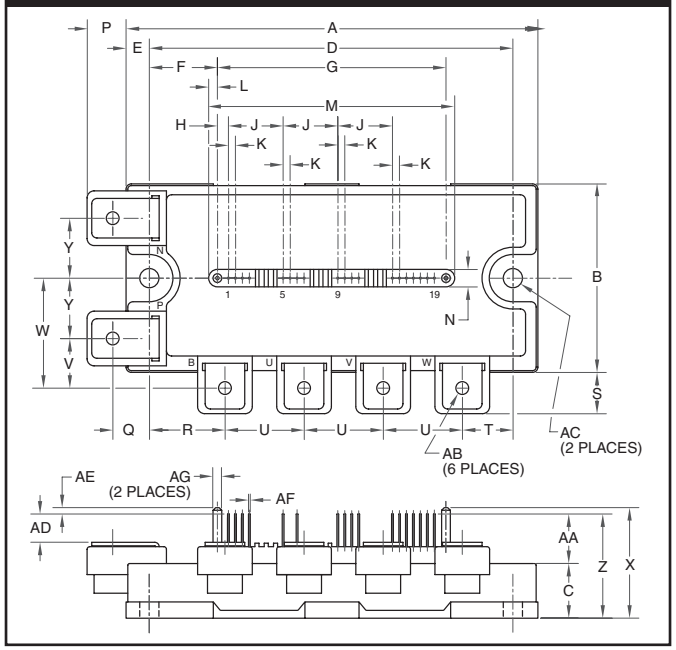

Dim.	Inches	Millimeters
A	4.72	120.0
B	2.17	55.0
C	0.63	16.0
D	4.17	106.0
E	0.28	7.0
F	0.78	19.75
G	2.62	66.5
H	0.13	3.25
J	0.63	16.0
K	0.08	2.0
L	0.10	2.5
M	2.81	71.5
N	0.20	5.0
P	0.43	11.0
Q	0.42	10.75
R	0.87	22.0

Dim.	Inches	Millimeters
S	0.46	11.75
T	0.59	15.0
U	0.91	23.0
V	0.57	14.5
W	1.26	32.0
X	1.22	31.0
Y	0.69	17.5
Z	1.14	29.0
AA	0.51	13.0
AB	M5 Metric	M5
AC	0.22 Dia.	5.5 Dia.
AD	0.28	7.0
AE	0.08	2.0
AF	0.02 Sq.	0.5 Sq.
AG	0.10 Dia.	2.5 Dia.

2 PM25CL1B120, PM25RL1B120, PM50CL1B060, PM50CL1B120, PM50RL1B060, PM50RL1B120, PM75CL1B060, PM75CL1B120, PM75RL1B060,PM75RL1B120,PM100CL1B060, PM100RL1B060, PM150CL1B060, PM150RL1B060

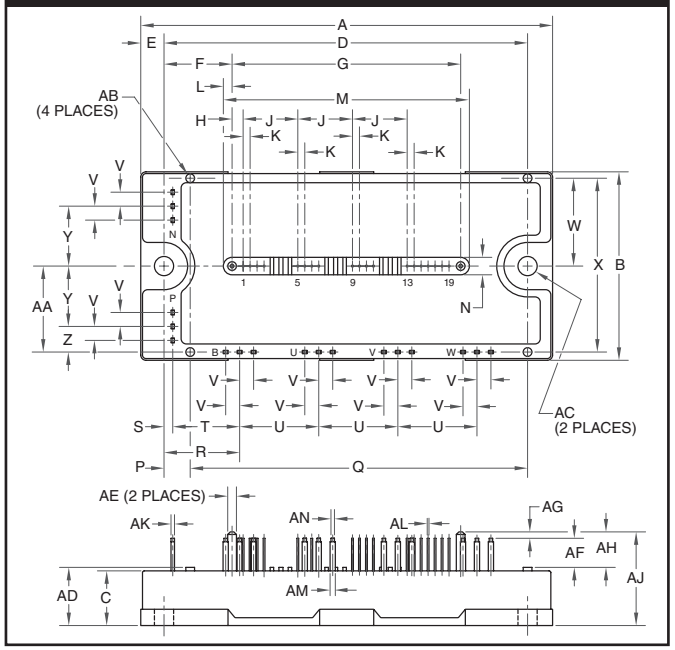

Dim.	Inches	Millimeters
A	4.72	120.0
B	2.17	55.0
C	0.63	16.0
D	4.17	106.0
E	0.28	7.0
F	0.78	19.75
G	2.62	66.5
H	0.13	3.25
J	0.63	16.0
K	0.08	2.0
L	0.10	2.5
M	2.81	71.5
N	0.20	5.0
P	0.31	7.75
Q	3.87	98.25
R	0.87	22.0
S	0.10	2.5
T	0.77	19.5
U	0.91	23.0

Dim.	Inches	Millimeters
V	0.16	4.0
W	1.01	25.75
X	2.00	50.75
Y	0.69	17.5
Z	0.30	7.5
AA	0.98	25.0
AB	0.10 Dia.	2.5 Dia.
AC	0.22 Dia.	5.5 Dia.
AD	0.67	17.0
AE	0.10 Dia.	2.5 Dia.
AF	0.33	8.5
AG	0.08	2.0
AH	0.41	10.5
AJ	1.08	27.5
AK	0.04	1.0
AL	0.02 Sq.	0.5 Sq.
AM	0.06	1.5
AN	0.04	1.0

3 PM25RL1C120, PM50B4L1C060, PM50B5L1C060, PM50B6L1C060, PM50RL1C060, PM75B4L1C060, PM75B5L1C060, PM75B6L1C060

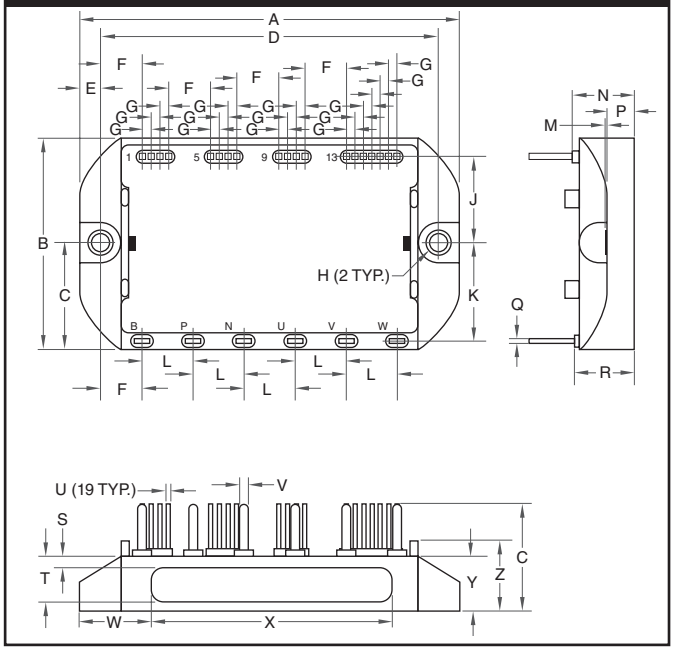

Dim.	Inches	Millimeters
A	3.54	90.0
B	1.97	50.0
C	0.98	25.0
D	3.5	80.0
E	0.2	5.0
F	0.4	10.0
G	0.08	2.0
H	0.17 Dia.	4.3 Dia.
J	0.8	20.5
K	0.9	23.0
L	0.5	12.0
M	0.012	0.3

Dim.	Inches	Millimeters
N	0.58	14.6
P	0.26	6.7
Q	0.02	0.5
R	0.56	14.2
S	0.1±0.02	2.5±0.5
T	0.31	8.0
U	0.02 Sq.	0.5 Sq.
V	0.08	2.0
W	0.69±0.02	17.5±0.5
X	0.22	5.5
Y	0.52	13.0
Z	0.65	16.5

4 PM100CL1A120, PM100RL1A120, PM150CL1A120, PM150RL1A120 PM200CL1A060, PM200RL1A060, PM300CL1A060, PM300RL1A060,

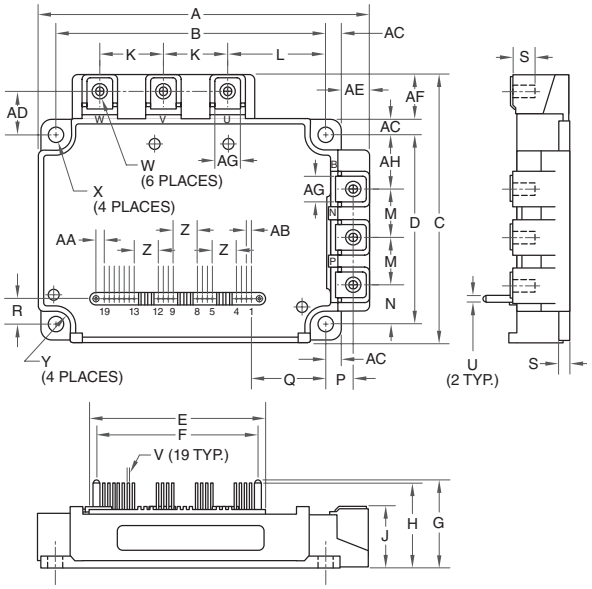

Dim.	Inches	Millimeters
A	5.31	135.0
B	4.33±0.02	110±0.5
C	4.33	110.0
D	3.07	78.0±0.5
E	2.81	71.5
F	2.62	66.5
G	1.37	34.7
H	1.32	33.6
J	0.95+0.04/-0.01	24.1+1.0/-0.5
K	1.02	26.0
L	1.59	40.5
M	0.79	20.0
N	0.65	16.5
P	0.43±0.01	11.0±0.3
Q	1.19	30.15
R	0.43	11.0

Dim.	Inches	Millimeters
S	0.51	13.0
T	0.16	4.0
U	0.1 Dia.	2.5 Dia.
V	0.02 Sq.	0.5 Sq.
W	M5 Metric	M5
X	0.22 Dia.	5.5 Dia.
Y	0.24 Rad.	6.0 Rad.
Z	0.39	10.0
AA	0.13	3.25
AB	0.08	2.0
AC	0.24	6.05
AD	0.71	18.0
AE	0.46	11.7
AF	0.74	18.7
AG	0.41	10.5
AH	0.85	21.5

5 PM200CLA120, PM300CLA120, PM450CLA060, PM450CLA120, PM600CLA060

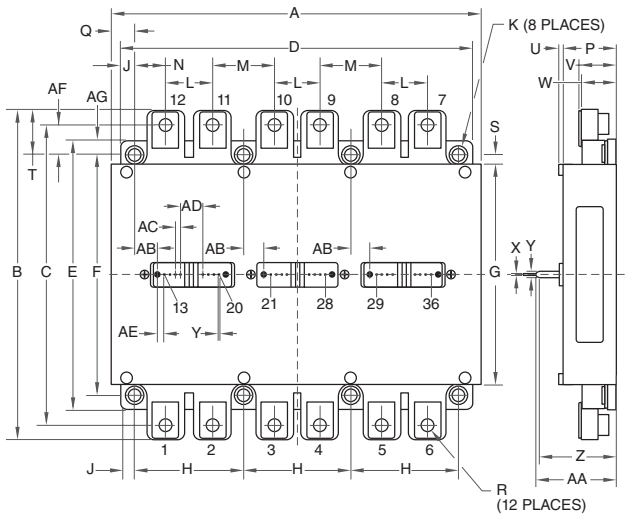

Dim.	Inches	Millimeters
A	6.77	172.0
B	5.90	150.0
C	5.39	137.0
D	6.38	162.0
E	4.84	123.0
F	4.33	110.0
G	3.90	99.0
H	1.97	50.0
J	0.236	6.0
K	5.5 Metric	M5.5
L	0.866	22.0
M	1.10	28.0
N	0.55	14.0
P	0.945	24.0
Q	0.43	11.0
R	M6 Metric	M6

Dim.	Inches	Millimeters
S	0.217	5.5
T	0.79	20.0
U	0.08	2.0
V	0.67	17.0
W	0.62	15.8
X	0.025 Sq.	0.64 Sq.
Y	0.1 Dia.	2.5 Dia.
Z	1.40	35.5
AA	1.44	36.6
AB	0.36	9.08
AC	0.10	2.54
AD	0.40	10.16
AE	0.127	3.22
AF	0.53	13.5
AG	0.256	6.5

6 PM200DV1A120, PM300DV1A120, PM400DV1A060, PM450DV1A120, PM600DV1A060,

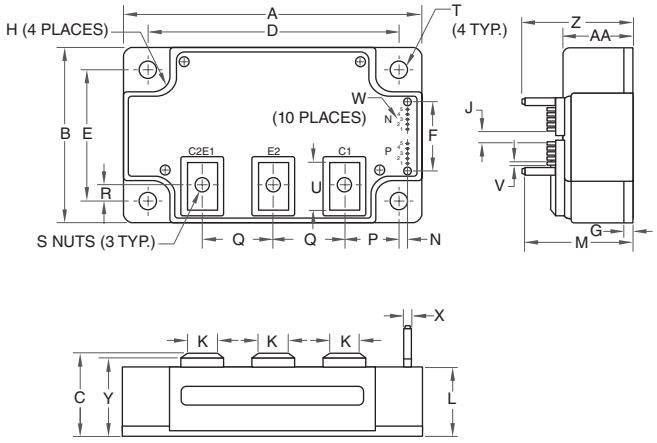

Dim.	Inches	Millimeters
A	4.72	120.0
B	2.76	70.0
C	1.14+0.04/-0.02	29.0+1.0/-0.5
D	4.17±0.01	106.0±0.3
E	2.20±0.01	56.0±0.3
F	1.52	38.5
G	0.16	4.0
H	0.26 Rad.	6.5 Rad.
J	0.40	10.16
K	0.55	14.0
L	1.02	26.0
M	1.53	39.0
N	0.12±0.02	3.0±0.5

Dim.	Inches	Millimeters
P	1.50	38.0
Q	0.98	25.0
R	0.37	9.3
S	M6 Metric	M6
T	0.26 Dia.	6.5 Dia.
U	0.72	18.3
V	0.10	2.54
W	0.025 Sq.	0.64 Sq.
X	0.14 Dia.	3.5 Dia.
Y	1.10	28.0
Z	1.59	40.5
AA	1.14	29.0

7 PM800DV1B060

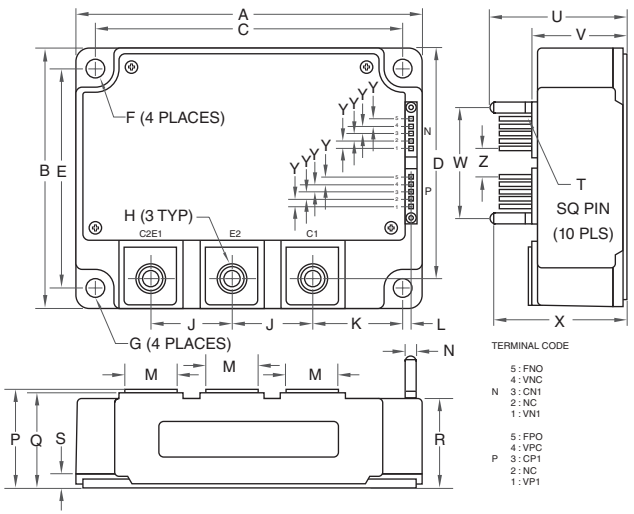

Dim.	Inches	Millimeters
A	4.72	120.0
B	3.54	90.0
C	4.17±0.010	106.0±0.25
D	2.87	73.0
E	2.99±0.010	76.0±0.25
F	0.26 Rad.	6.5 Rad.
G	0.26 Dia.	6.5 Dia.
H	M8 Metric	M8
J	1.10	28.0
K	1.22	31.0
L	0.12±0.02	3.0±0.5
M	0.71	18.0

Dim.	Inches	Millimeters
N	0.14 Dia.	3.5 Dia.
P	1.34+0.04/-0.02	34.0+1.0/-0.5
Q	1.29	32.8
R	1.22	31.0
S	0.16	4.0
T	0.025 Sq.	0.64 Sq.
U	1.79	45.5
V	1.34	34.0
W	1.52	38.5
X	1.73	44.0
Y	0.10	2.54
Z	0.40	10.16

DIPIPM™

Applications Include:
- Servo / Motion Controls
- HVAC
- Home Appliances
- Pumps
- Low-capacity Industrial Inverters

Packages:
- Super Mini DIPIPM
- Super Mini MOSFET DIPIPM
- Mini DIPIPM
- Large DIPIPM

Circuit Configuration:
- 6-Pac
- PFC

Features:
- Gate Drive
- Gate Drive Undervoltage (UV) Lockout
- Short Circuit (SC) Protection

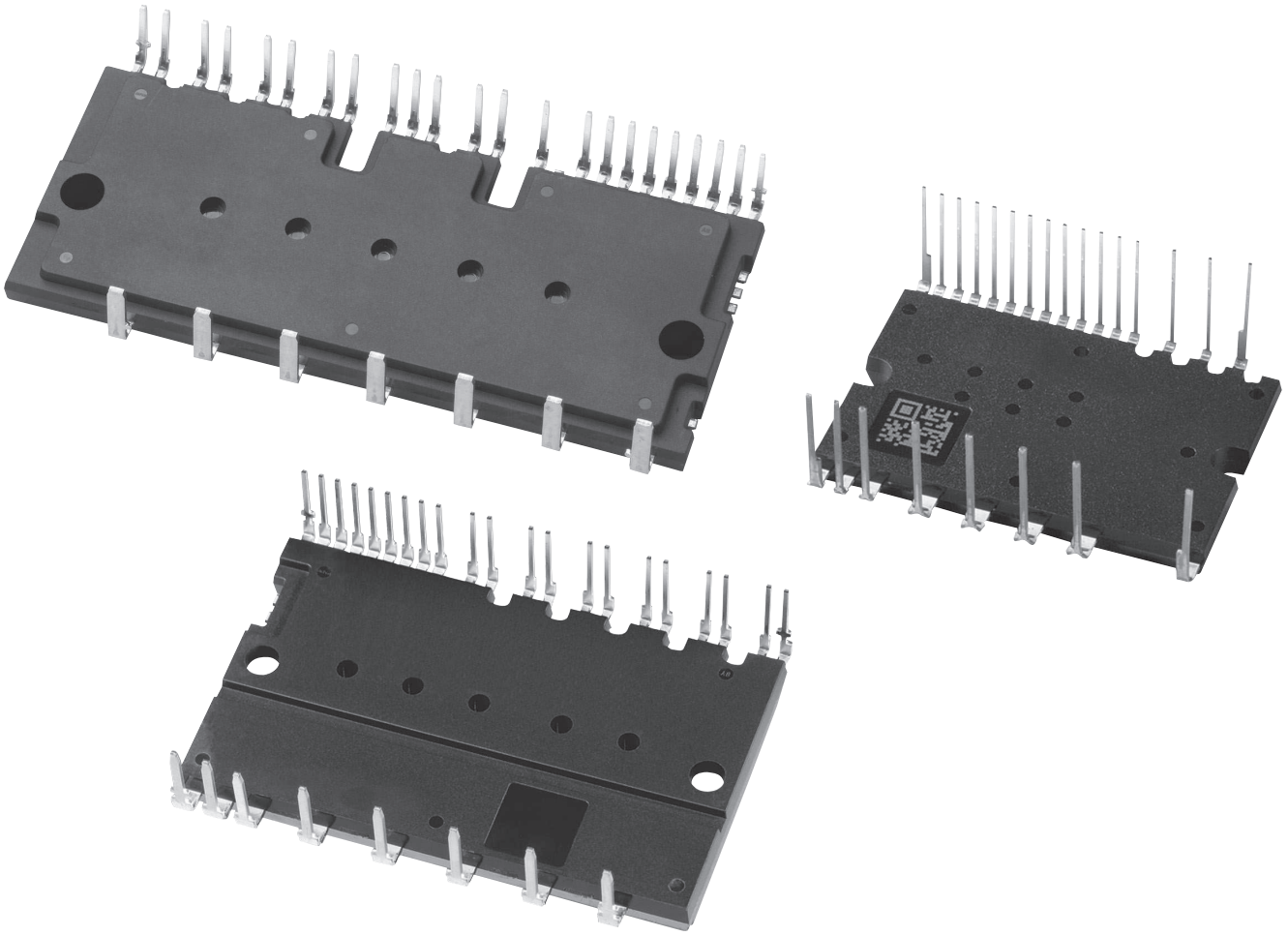

VOLTAGE: 500V TO 1200V
CURRENT: 3A TO 75A

TABLE OF CONTENTS

Numbering System E-2
Super Mini DIPIPM Modules E-2
Super Mini MOSFET DIPIPM Modules E-3
Mini DIPIPM Modules E-4
DIPPFC™ Modules E-4
Large DIPIPM Modules E-5
Outline Drawings E-6

DIPIPM and DIPPFC are registered trademarks of Mitsubishi Electric Corp.

Super Mini DIPIPM 600V Modules - Version 6 Numbering System

(Refer to device datasheets at www.pwrx.com for test conditions.)

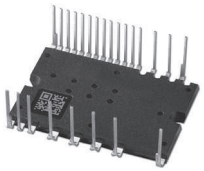

MAXIMUM RATINGS (IGBT Inverter Sector)					ELECTRICAL CHARACTERISTICS (IGBT Inverter Sector)					THERMAL CHARACTERISTICS				
Type	V_{CES} Volts	I_C/I_{CP} Amperes	P_D Watts	V_{RMS} Isolation Volts	Typ. $V_{CE(SAT)}$ Volts	V_{EC} Volts	I_{CES} mA	$V_{CC(PROT)}$ Volts	$t_{DEAD(Min)}$ usec	IGBT $R_{th(j-c)}$ °C/W	Diode $R_{th(j-c)}$ °C/W	Weight Grams	Outline Drawing Number	Outline Drawing Page
PSS05S92F6-AG	600	5 / 10	20.0	1500*	1.50	1.70	1.0	400	1.0	5.0	5.7	8.5	1	E-6
PSS10S92F6-AG	600	10 / 20	21.3	1500*	1.75	2.50	1.0	400	1.0	4.7	5.4	8.5	1	E-6
PSS15S92F6-AG	600	15 / 30	27.0	1500*	1.75	2.50	1.0	400	1.0	3.7	4.5	8.5	1	E-6
PSS20S92F6-AG	600	20 / 40	33.3	1500*	1.65	2.50	1.0	400	1.0	3.0	3.9	8.5	1	E-6
PSS30S92F6-AG	600	30 / 60	47.6	1500*	1.65	2.30	1.0	400	2.0	2.1	3.0	8.5	1	E-6
PSS35S92F6-AG	600	35 / 70	66.6	1500*	1.40	1.80	1.0	400	2.0	1.5	2.8	8.5	1	E-6

* 2500V with convex heatsink

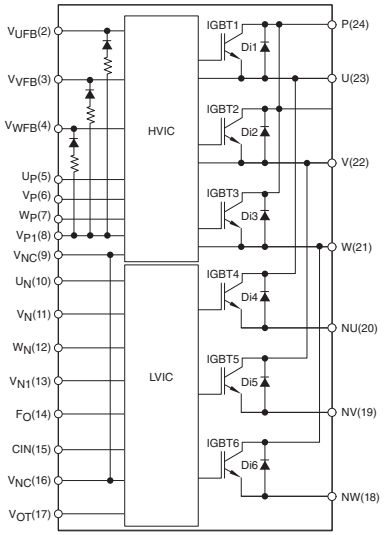

Version 4 Numbering System

PS21A79 is a DIPIPM Version 4 transfer mold IPM rated at 600 Volts and 50 Amperes.

PS2 1 A 7 9

(1) (2) (3) (4) (5)

(1) Device:
- PS2 = Transfer Mold Type IPM
- PS5 = DIPPFC

(2) Voltage (V_{CES})
- 1 = 600V
- 2 = 1200V

(3) Package Style
- 7 = Mini DIPIPM Version 4
- A = DIPIPM Version 4

(4) Factory Information

(5) Current Rating (I_C)
- 1 = 3A
- 2 = 5A
- 3 = 10A
- 4 = 15A
- 5 = 20A
- 7 = 30A
- 8 = 35A
- 9 = 50A
- A = 75A

Version 6 Numbering System

PSS15S92F6-AG is a Super Mini DIPIPM Version 6 transfer mold IPM rated at 600 Volts and 15 Amperes.

PSS15S92F6-XXXX

(1) (2) (3) (4) (5) (6) (7) (8)

(1) Device:
- PSF = Full SiC Chips
- PSH = Si IGBT, SiC Diode
- PSS = Si IGBT, Si Diode
- PSM = Si MOSFET

(2) Rated Current

(3) Circuit
- 3-Phase (6-in-1)
  - C = Common Emitter
  - S = Open Emitter
- H-Bridge (4-in-1)
  - B = Common Emitter
  - Y = Open Emitter
- PFC
  - L = Interleaved

(4) Package:
- 7 = Mini
- 9 = Super Mini
- A = Large

(5) Series

(6) Built-in Functions
- A = None
- B = OT
- C = VOT (Analog)
- D = BSD
- E = BSD, OT
- F = BSD, VOT

(7) V_{CES}, V_{DDS}
- 5 = 500V
- 6 = 600V
- T = 1200V

(8) Factory Options

Super Mini MOSFET DIPIPM 500V Modules - Version 6 Numbering System

(Refer to device datasheets at www.pwrx.com for test conditions.)

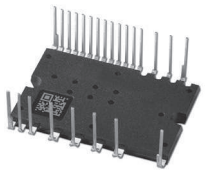

MAXIMUM RATINGS (MOSFET Inverter Sector)					ELECTRICAL CHARACTERISTICS (MOSFET Inverter Sector)					THERMAL CHARACTERISTICS MOSFET			
Type	V_{DSS} Volts	I_D/I_{DP} Amperes	P_D Watts	V_{RMS} Isolation Volts	Typ. $R_{DS(ON)}$ Ω	V_{SD} Volts	I_{DSS} mA	$V_{DD(PROT)}$ Volts	$t_{DEAD(Min)}$ usec	$R_{th(j-c)}$ °C/W	Weight Grams	Outline Drawing Number	Outline Drawing Page
PSM03S93E5-A	500	3 / 6	29.4	1500*	1.50	0.90	1.0	400	1.3	3.4	8.5	1	E-6
PSM05S93E5-A	500	5 / 10	44.6	1500*	0.60	0.90	1.0	400	1.3	2.8	8.5	1	E-6

* 2500V with convex heatsink

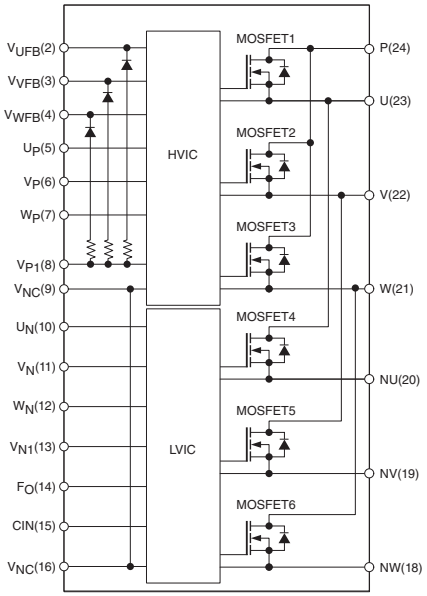

Mini DIPIPM 600V Modules - Version 6 Numbering System

(Refer to device datasheets at www.pwrx.com for test conditions.)

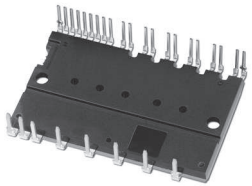

MAXIMUM RATINGS (IGBTInverter Sector)					ELECTRICAL CHARACTERISTICS (IGBT Inverter Sector)					THERMAL CHARACTERISTICS				
Type	V_{CES} Volts	I_C/I_{CP} Amperes	P_D Watts	V_{RMS} Isolation Volts	Typ. $V_{CE(SAT)}$ Volts	V_{EC} Volts	I_{CES} mA	$V_{CC(PROT)}$ Volts	$t_{DEAD(Min)}$ usec	IGBT $R_{th(j-c)}$ °C/W	Diode $R_{th(j-c)}$ °C/W	Weight Grams	Outline Drawing Number	Page
PSS20S71F6	600	20 / 40	76.9	2500	1.40	1.50	1.0	400	1.5	1.3	3.0	21	2	E-6
PSS30S71F6	600	30 / 60	90.9	2500	1.40	1.50	1.0	400	1.5	1.1	2.8	21	2	E-6
PSS50S71F6	600	50 / 100	TBD	2500	TBD	TBD	1.0	400	1.5	TBD	TBD	21	2	E-6

DIPPFC 600V Modules - Version 4 Numbering System

(Refer to device datasheets at www.pwrx.com for test conditions.)

MAXIMUM RATINGS (MOSFET Inverter Sector)				ELECTRICAL CHARACTERISTICS (MOSFET Inverter Sector)				THERMAL CHARACTERISTICS				
Type	V_{CES} Volts	$I_{i(RMS)}$ Amperes	V_{RMS} Isolation Volts	Typ. $V_{CES(SAT)}$ Volts	Typ. $V_{EC(H)}$ Volts	Typ. $V_{EC(L)}$ Volts	I_{CES} mA	IGBT $R_{th(j-c)}$ °C/W	Diode $R_{th(j-c)}$ °C/W	Weight Grams	Outline Drawing Number	Page
PS51787	600	20	2500	2.05	2.2	1.2	1.0	0.96	1.35	54	5	E-8
PS51789	600	20	2500	2.10	2.2	1.2	1.0	0.68	0.90	54	5	E-8

PSS20S71F6, PSS30S71F6, PSS50S71F6

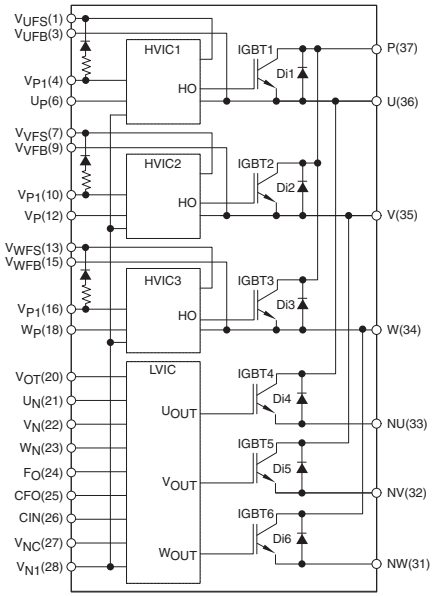

PS51787, PS51789

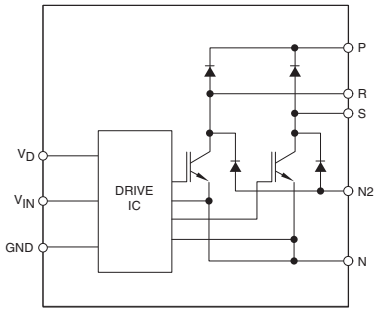

Large DIPIPM 600V & 1200V Modules (Refer to device datasheets at www.pwrx.com for test conditions.)

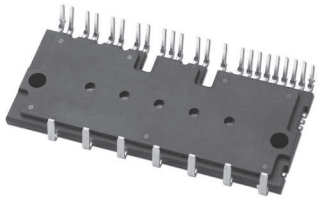

MAXIMUM RATINGS (IGBTInverter Sector)					ELECTRICAL CHARACTERISTICS (IGBT Inverter Sector)					THERMAL CHARACTERISTICS				
Type	V_{CES} Volts	I_C/I_{CP} Amperes	P_D Watts	V_{RMS} Isolation Volts	Typ. $V_{CE(SAT)}$ Volts	V_{EC} Volts	I_{CES} mA	$V_{CC(PROT)}$ Volts	$t_{DEAD(Min)}$ usec	IGBT $R_{th(j-c)}$ °C/W	Diode $R_{th(j-c)}$ °C/W	Weight Grams	Outline Drawing Number	Page
600V - Version 4 Numbering System														
PS21A79	600	50 / 100	142	2500	1.55	1.7	1.0	400	2.0	0.88	1.78	65	3	E-7
PS21A7A	600	75 / 150	162	2500	1.55	1.7	1.0	400	2.0	0.77	1.25	65	3	E-7
1200V - Version 6 Numbering System														
PSS05SA2FT	1200	5 / 10	TBD	2500	TBD	TBD	1.0	800	TBD	TBD	TBD	TBD	4	E-7
PSS10SA2FT	1200	10 / 20	TBD	2500	TBD	TBD	1.0	800	TBD	TBD	TBD	TBD	4	E-7
PSS15SA2FT	1200	15 / 30	TBD	2500	TBD	TBD	1.0	800	TBD	TBD	TBD	TBD	4	E-7
PSS25SA2FT	1200	25 / 50	TBD	2500	TBD	TBD	1.0	800	TBD	TBD	TBD	TBD	4	E-7
PSS35SA2FT	1200	35 / 70	TBD	2500	TBD	TBD	1.0	800	TBD	TBD	TBD	TBD	4	E-7
PSS50SA2FT	1200	50 / 100	TBD	2500	TBD	TBD	1.0	800	TBD	TBD	TBD	TBD	4	E-7

PS21A79, PS21A7A

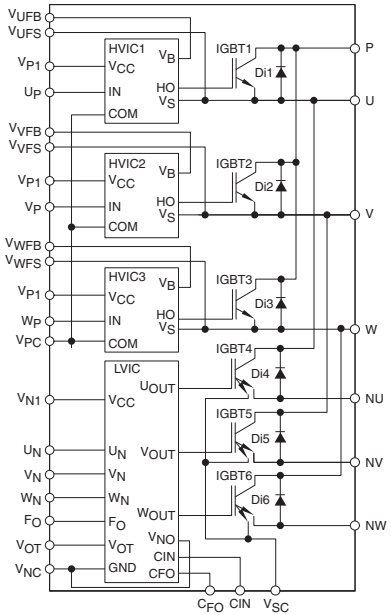

PSS05SA2FT, PSS10SA2FT, PSS15SA2FT, PSS25SA2FT, PSS35SA2FT, PSS50SA2FT

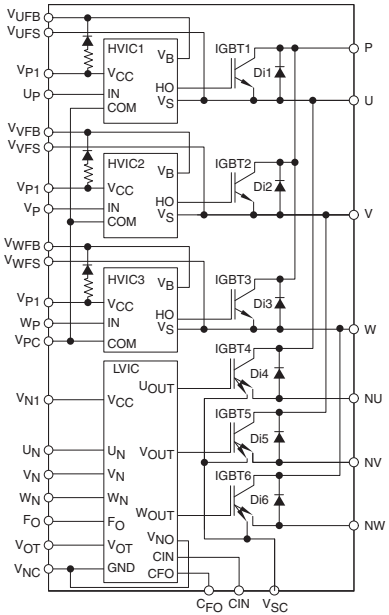

1 PSM03S93E5-A, PSM05S93E5-A , PSS05S92F6-AG, PSS10S92F6-AG, PSS15S92F6-AG, PSS20S92F6-AG, PSS30S92F6-AG, PSS35S92F6-AG

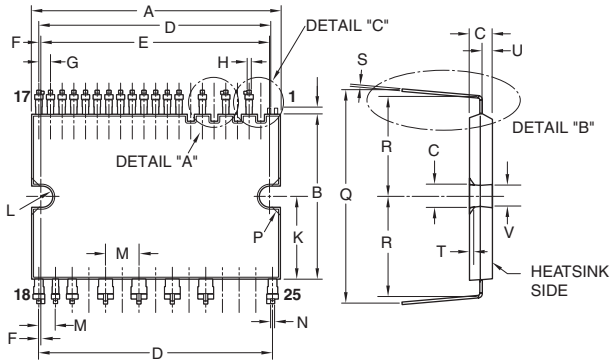

TERMINAL CODE

1-A	NC(V_{NC})	13	V_{N1}
1-B	NC(V_{P1})	14	F_O
2	V_{UFB}	15	CIN
3	V_{VFB}	16	V_{NC}*1
4	V_{WFB}	17	V_{OT}*2
5	U_P	18	NW
6	V_P	19	NV
7	W_P	20	NU
8	V_{P1}	21	W
9	V_{NC}*1	22	V
10	U_N	23	U
11	V_N	24	P
12	W_N	25	NC

*1 - Pin 9 & Pin 16 are connected inside the DIPIPM, use either Pin 9 or Pin 16 for the ground connection and leave the other one open.
*2 - For MOSFET devices #17 is NC

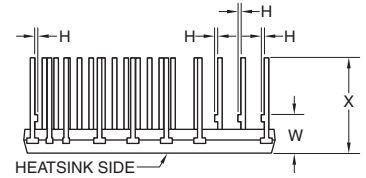

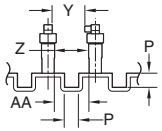

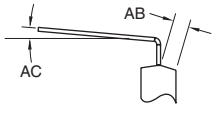

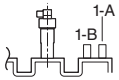

Dim.	Inches	Millimeters
A	1.50±0.02	38.0±0.5
B	0.94±0.02	24.0±0.5
C	0.14	3.5
D	1.40	35.56
E	0.07±0.008	35.0±0.2
F	0.011	0.28
G	0.07±0.008	1.778±0.2
H	0.02	0.5
J	0.04	1.0

Dim.	Inches	Millimeters
K	0.47	12.0
L	0.063 Rad.	1.6 Rad.
M	0.1±0.008	2.54±0.2
N	0.024	0.6
P	0.05	1.2
Q	1.16±0.02	29.4±0.5
R	0.57±0.02	14.4±0.5
S	0.016	0.4
T	0.031	0.8

Dim.	Inches	Millimeters
U	0.06±0.02	1.5±0.05
V	0.13	3.3
W	0.22±0.02	5.5±0.5
X	0.55±0.02	14.0±0.5
Y	0.098 Min.	2.5 Min.
Z	0.1046	2.656
AA	0.1085	2.756
AB	0.06 Min.	1.5 Min.
AC	0 ~ 5°	0 ~ 5°

2 PSS20S71F6, PSS30S71F6, PSS50S71F6

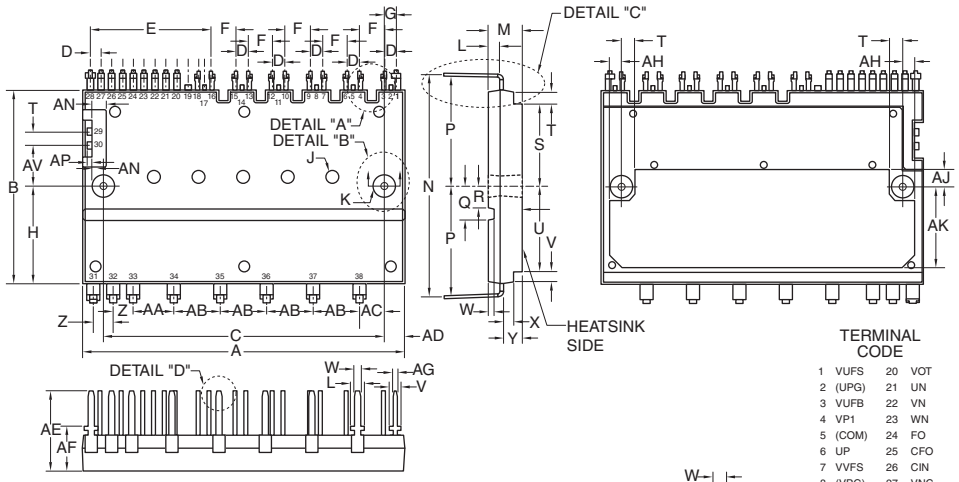

TERMINAL CODE

1	VUFS	20	VOT
2	(UPG)	21	UN
3	VUFB	22	VN
4	VP1	23	WN
5	(COM)	24	FO
6	UP	25	CFO
7	VVFS	26	CIN
8	(VPG)	27	VNC
9	VVFB	28	VN1
10	VP1	29	(WNG)
11	(COM)	30	(VNG)
12	VP	31	NW
13	VWFS	32	NV
14	(WPG)	33	NU
15	VWFB	34	W
16	VP1	35	V
17	(COM)	36	U
18	WP	37	P
19	(UNG)	38	NC

Dim.	Inches	Millimeters
A	2.07	52.5
B	1.22	31.0
C	1.81±0.008	46.0±0.2
D	0.07±0.008	1.78±0.2
E	0.77	19.58
F	0.17±0.008	4.32±0.2
G	0.08±0.019	2.04±0.3
H	0.61	15.5
J	0.09 Dia. x 0.1 Depth	2.2 Dia. x 2.6 Depth
K	0.13 Dia.	3.3 Dia.
L	0.08	2.0
M	0.22	5.6
N	1.41±0.02	35.9±0.5
P	0.69	17.7

Dim.	Inches	Millimeters
Q	0.216	5.5
R	0.14	3.5
S	0.503	12.78
T	0.09	2.2
U	0.53	13.5
V	0.06	1.5
W	0.04	1.0
X	0.06	1.55
Y	0.12	3.1±0.1
Z	0.13±0.019	3.3±0.3
AA	0.26±0.019	6.6±0.3
AB	0.3±0.019	7.62±0.3
AC	0.15±0.019	3.95±0.3
AD	0.13	3.25
AE	0.5	12.7

Dim.	Inches	Millimeters
AF	0.28	7.1
AG	0.02	0.5
AH	0.067	1.7
AJ	0.11	2.8
AK	0.51	13.0
AL	0.114	2.9
AM	0.063	1.6
AN	0.068	1.75
AP	0.03	0.75
AQ	0.14 Dia.	3.5 Dia.
AR	0.145 Dia.	3.7 Dia.
AS	0° ~ 5°	
AT	0.078	1.96
AU	0.023	0.6
AU	0.26	6.55

3 PS21A79, PS21A7A

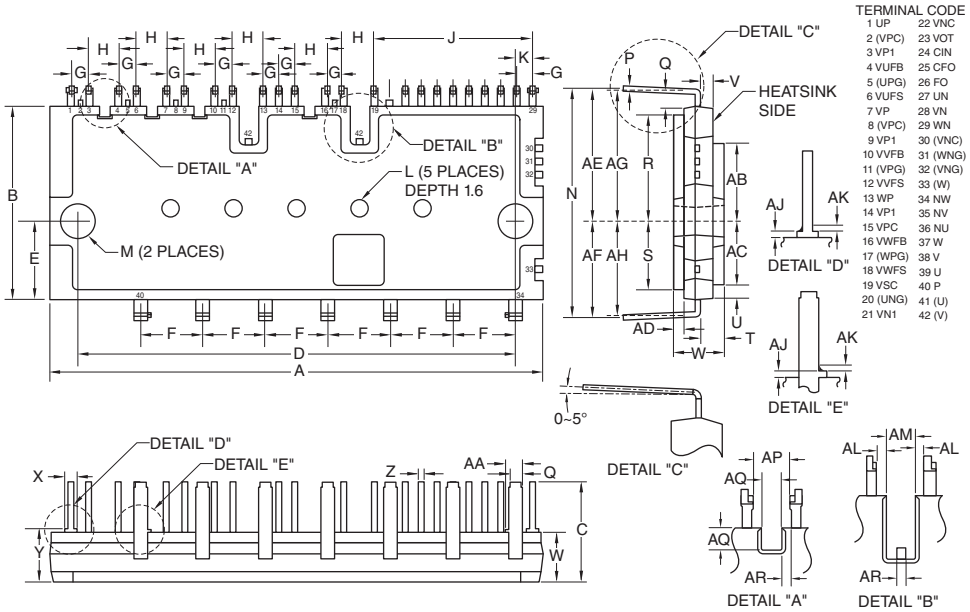

Dim.	Inches	Millimeters	Dim.	Inches	Millimeters	Dim.	Inches	Millimeters
A	3.11±0.02	79.0±0.5	Q	0.08	2.0	AE	0.82	20.9
B	1.22±0.02	31.0±0.5	R	0.66	16.73	AF	0.60	15.3
C	0.63	16.0	S	0.44	11.13	AG	0.81	20.64
D	2.76±0.01	70.0±0.3	T	0.15±0.04	3.8±1.0	AH	0.59	15.03
E	0.5	12.7	U	0.082	2.1	AJ	0.23	0.6
F	0.39±0.01	10.0±0.3	V	0.086	2.2	AK	0.02	0.5
G	0.1±0.01	2.54±0.3	W	0.31	8.0	AL	0.021	0.55
H	0.2±0.01	5.08±0.3	X	0.07	1.8	AM	0.11	2.9
J	1.0	25.4	Y	0.34	8.6	AN	0.23	5.95
K	0.11	2.8	Z	0.03	0.8	AP	0.14	3.52
L	0.12 Dia.	2.9 Dia.	AA	0.106	2.7	AQ	0.063	1.6
M	0.18±0.01 Dia.	4.5±0.2 Dia.	AB	0.48	12.33	AR	0.04	1.06
N	1.42±0.02	36.2±0.5	AC	0.39	10.12			
P	0.03	0.7	AD	0.068	1.75			

4 PSS05SA2FT, PSS10SA2FT, PSS15SA2FT, PSS25SA2FT, PSS35SA2FT, PSS50SA2FT

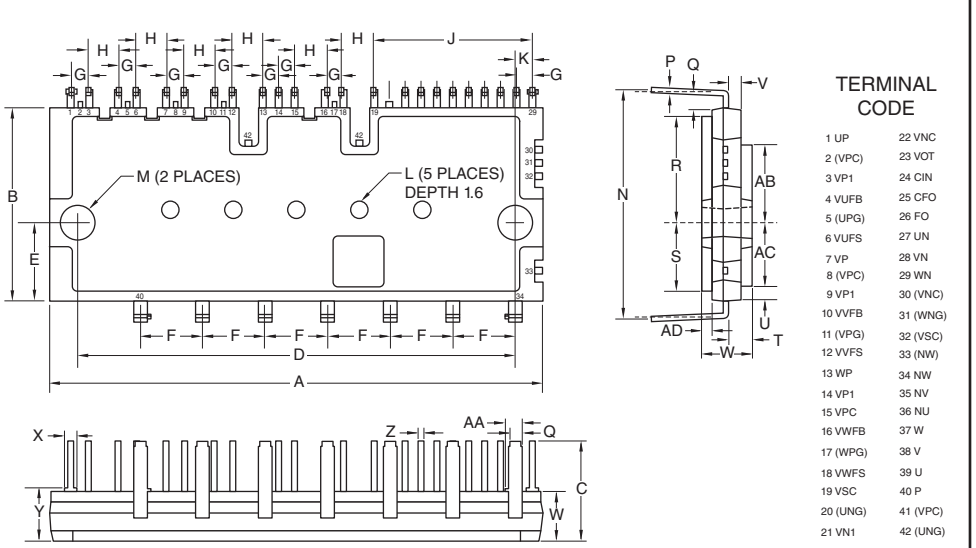

Dim.	Inches	Millimeters	Dim.	Inches	Millimeters
A	3.11±0.02	79.0±0.5	Q	0.08	2.0
B	1.22±0.02	31.0±0.5	R	0.66	16.73
C	0.63	16.0	S	0.44	11.13
D	2.76±0.01	70.0±0.3	T	0.15±0.04	3.8±1.0
E	0.5	12.7	U	0.082	2.1
F	0.39±0.01	10.0±0.3	V	0.086	2.2
G	0.1±0.01	2.54±0.3	W	0.31	8.0
H	0.2±0.01	5.08±0.3	X	0.07	1.8
J	1.0	25.4	Y	0.34	8.6
K	0.11	2.8	Z	0.03	0.8
L	0.12 Dia.	2.9 Dia.	AA	0.106	2.7
M	0.18±0.01 Dia.	4.5±0.2 Dia.	AB	0.48	12.33
N	1.42±0.02	36.2±0.5	AC	0.39	10.12
P	0.03	0.7	AD	0.068	1.75

5 PS51787, PS51789

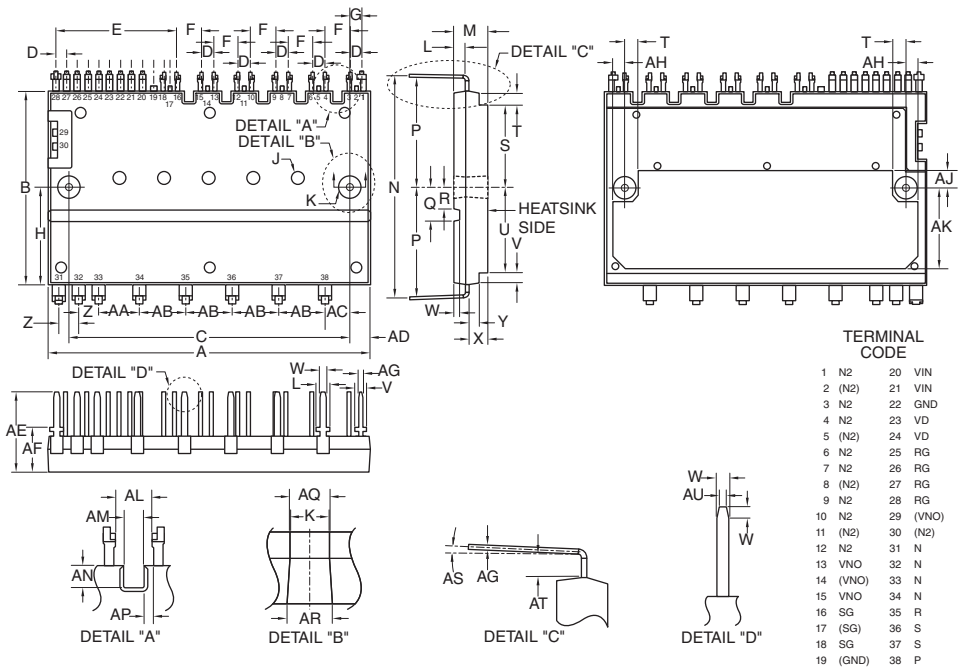

Dim.	Inches	Millimeters
A	2.07	52.5
B	1.22	31.0
C	1.81±0.008	46.0±0.2
D	0.07±0.008	1.78±0.2
E	0.77	19.58
F	0.17±0.008	4.32±0.2
G	0.08±0.019	2.04±0.3
H	0.61	15.5
J	0.09 Dia. x 0.1 Depth	2.2 Dia. x 2.6 Depth
K	0.13 Dia.	3.3 Dia.
L	0.08	2.0
M	0.22	5.6
N	1.41±0.02	35.9±0.5
P	0.69	17.7

Dim.	Inches	Millimeters
Q	0.216	5.5
R	0.14	3.5
S	0.503	12.78
T	0.09	2.2
U	0.53	13.5
V	0.06	1.5
W	0.04	1.0
X	0.06	1.55
Y	0.12	3.1±0.1
Z	0.13±0.019	3.3±0.3
AA	0.26±0.019	6.6±0.3
AB	0.3±0.019	7.62±0.3
AC	0.15±0.019	3.95±0.3
AD	0.13	3.25
AE	0.5	12.7

Dim.	Inches	Millimeters
AF	0.28	7.1
AG	0.02	0.5
AH	0.067	1.7
AJ	0.11	2.8
AK	0.51	13.0
AL	0.114	2.9
AM	0.063	1.6
AN	0.068	1.75
AP	0.03	0.75
AQ	0.14 Dia.	3.5 Dia.
AR	0.145 Dia.	3.7 Dia.
AS	0° ~ 5°	
AT	0.078	1.96
AU	0.023	0.6

DISCRETE THYRISTORS

Phase Control SCR / Inverter Grade SCR

Applications Include:
- Battery Chargers
- Flexible AC Transmissions
- HVDC
- Induction Heating
- Medical Equipment
- Medium Voltage Inverters
- Motor Controls
- Power Supplies
- Soft Starters
- Traction Inverters
- Transportation
- UPS
- VAR Generators
- Welding

Packages:
- Discrete Discs
- Discrete Studs

Features:
- Nickel Plating Finish
- Hermetic Encapsulation for Long-Term Reliability to 1 x 10^{-6} cc/He/sec

TABLE OF CONTENTS

Numbering System F-2
Standard Leads F-2
Phase Control SCRs F-3
Inverter Grade SCRs F-6
Outline Drawings F-8

Phase Control SCRs:
VOLTAGE: 100V TO 6500V
CURRENT: 40A TO 5000A
Inverter Grade SCRs:
VOLTAGE: 200V TO 2000V
CURRENT: 40A TO 2100A

Numbering System

T7S0246504DN is a 650 Ampere, 2400 Volt, Phase Control SCR

T7S0 24 65 0 4 DN

(1) (2) (3) (4) (5) (6)

(1) Type Number

(2) Voltage Rating (x 100)

(3) Current Rating:

T5	(x 1)
T6, T7, T8	(x 10)
T9, TA, TB, TC, TD	(x 100)

(4) Turn-off Time (T_q) Codes for SCR Part Numbers

Code	Time (μsec)	Code	Time (μsec)
0	Phase Control	2	60
9	8	C	70
8	10	1	80
7	15	K	100
6	20	M	125
B	25	N	150
5	30	P	175
L	35	Q	200
4	40	R	250
3	50		

T627122064DN is a 200 Ampere, 1200 Volt, Inverter Grade SCR

T627 12 20 6 4 DN

(1) (2) (3) (4) (5) (6)

(5) Maximum Gate Current to Trigger (I_{gt}) Codes for SCR Part Numbers

Code	I_{gt} (mA)
7	70
K	75
6	80
5	100
F	120
4	150
G	180
3	200
H	250
2	300
1	500
X	Not Applicable

(6) Lead Code - Refer to Standard Lead Table

C712L is a 1000 Ampere, 2000 Volt, Inverter Grade SCR

C712 L

(1) (2)

(1) Type Number

(2) Voltage Code

PB	=	1200V
PD	=	1400V
PM	=	1600V
PN	=	1800V
L	=	2000V

Standard Leads

Device Type	Lead Code	Description
Disc		
Disc	DN	Gate leads: 8” with #6 ring terminals
Disc	DH	Gate leads: 12” with #6 ring terminals
Disc	HE	Gate leads: 20” with #6 ring terminals
Stud		
T5	AQ	Power Lead: 6.04” from seating plane to center of 0.266” diameter hole in terminal lug, Gate leads: 7.34” with #6 ring terminals
T6	BT	Power Lead: 7.85” from seating plane to center of 0.281” diameter hole in terminal lug, Gate leads: 7.86” with #6 ring terminals
T7	BY	Power Lead: 9.66” from seating plane to center of 0.343” diameter hole in terminal lug, Gate leads: 10.03” with #6 ring terminals (Note: High Voltage T7 studs with convoluted seal will have power lead 9.88” from seating plane to center of 0.343” diameter hole in terminal lug, Gate leads: 10.03” with #6 ring terminals)

Phase Control SCRs - Disc/Hockey Puk (Refer to device datasheets at www.pwrx.com for test conditions.)

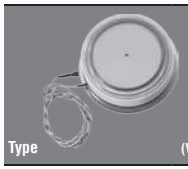

Type	V_{DRM} / V_{RRM} Volts (V_{RSM} = V_{RRM} + 100V)	$I_{t(av)}/T_C$ Amperes/°C (180° sin)	$I_{T(RMS)}$ Amperes (180° sin)	EUROPEAN I_{TSM} Amperes (10ms, $T_{j(max)}$), No V_{RRM} Reapplied)	EUROPEAN i^2t A^2 sec (10ms, $T_{j(max)}$), No V_{RRM} Reapplied)	NORTH AMERICAN i_{TSM} Amperes (8.3ms, $T_{j(max)}$), 100% V_{RRM} Reapplied)	NORTH AMERICAN i^2t A^2 sec (8.3ms, $T_{j(max)}$), 100% V_{RRM} Reapplied)	V_{TM}/I_{TM} Volts/Amperes ($T_{j(max)}$)	V_{TO} Volts ($T_{j(max)}$)	R_T mΩ ($T_{j(max)}$)	di/dt Amperes/µsec (Non-Repetitive)	T_q µsec (Typical)	dV/dt Volts/µsec	$R_{th(j-c)}$ °C/W	$R_{th(c-s)}$ °C/W	$T_{j(max)}$ °C	Outline Drawings Number	Outline Drawings Page
Up to 1800V																		
T620--2004DN	200 – 1600	200 / 88	315	6,000	180,000	4,000	64,000	1.98 / 500	1.13	1.72	800	100	300	0.08	0.02	125	1	F-8
T620--3004DN	200 – 1600	300 / 80	470	8,250	340,313	5,500	120,000	1.49 / 500	0.99	1.05	800	100	300	0.08	0.02	125	1	F-8
T625--4004DN	200 – 1200	400 / 80	625	7,500	281,250	5,000	100,000	1.1 / 200	0.77	1.24	800	150	300	0.08	0.02	150	1	F-8
T7H8--6504DN	200 – 1600	650 / 65	1,020	13,500	911,250	9,000	338,000	1.38 / 500	1.034	0.629	600	150	300	0.04	0.02	125	2	F-8
T7M8--6504DN	200 – 1600	650 / 65	1,020	13,500	911,250	9,000	338,000	1.38 / 500	1,034	0.629	600	1500	300	0.04	0.02	125	3	F-8
T7H8--7504DN	200 – 1600	750 / 62	1,180	15,750	1.2×10^6	10,500	460,000	1.50 / 1000	0.972	0.482	600	150	300	0.04	0.02	125	2	F-8
T7M8--7504DN	200 – 1600	750 / 62	1,180	15,750	1.2×10^6	10,500	460,000	1.50 / 1000	0.972	0.482	600	1500	300	0.04	0.02	125	3	F-8
T820--9004DH	200 – 1600	900 / 70	1,410	22,500	2.5×10^6	15,000	935,000	1.20 / 1000	0.785	0.351	400	300	300	0.037	0.02	125	5	F-9
T820--1404DH	400 –800	1450 / 70	5,419	17,253	1.4×10^6	12,200	620,000	1.20 / 1500 (25°C)	0.79	0.12	200	400	600	0.037	0.0085	140	5	F-9
T9G0--1603DH	1200 – 1800	1660 / 70	2,600	27,400	3.75×10^6	20,000	1.67×10^6	1.25 / 1500 (25°C)	0.834	0.164	1,000	150	400	0.023	0.006	125	7	F-10
T9S0--2003DH	1200 – 1800	2000 / 70	3,142	25,456	3.24×10^6	18,500	1.44×10^6	1.15 / 1500	0.755	0.226	200	400	1,000	0.015	0.0025	125	6	F-9
TAS0--2603DH	1400 – 1800	2635 / 70	4,139	35,826	6.42×10^6	26,174	2.85×10^6	0.99 / 1500	0.735	0.16	300	550	800	0.01	0.003	125	8	F-10
T9S0--2803DH	400 – 800	2850 / 70	4477	34,884	6.08×10^6	25,400	2.71×10^6	1.15 / 1500 (25°C)	0.722	0.0883	200	400	1000	0.015	0.0025	125	6	F-9
TBK7--300HHE	200 – 600	3000 / 70	4,710	72,000	25.9×10^6	48,000	9.6×10^6	0.97 / 3000	0.692	0.087	600	400	300	0.012	0.002	125	10	F-11
TBK5--3203DH	800 – 1600	3200 / 74	5,027	58,454	1.71×10^6	42,700	7.60×10^6	1.05 / 2000	0.826	0.107	200	400	1000	0.01	0.002	125	10	F-11
T9S0--3403DH	400 – 800	3450 / 70	5,419	33,469	5.60×10^6	24,450	2.49×10^6	1.15 / 1500 (25°C)	0.722	0.0883	200	600	600	0.015	0.0025	125	6	F-9
TBS7--350HHE	200 – 1600	3500 / 72	5,600	72,000	25.9×10^6	48,000	9.6×10^6	0.97 / 3000	0.692	0.087	600	400	300	0.010	0.002	125	11	F-11
Up to 2400V																		
T720--3504DN	200 – 2400	350 / 77	550	10,500	551,250	7,000	205,000	1.61 / 500	1.040	1.09	600	150	300	0.06	0.02	125	5	F-9
T720--4504DN	200 – 2400	450 / 65	700	12,600	793,800	8,400	295,000	1.25 / 300	0.93	0.90	600	150	300	0.06	0.02	125	5	F-9
T720--5504DN	200 – 2400	550 / 65	850	15,000	1.1×10^6	10,000	416,000	1.0 / 200	0.99	0.47	600	150	300	0.06	0.02	125	5	F-9
T7S0--6504DN	1800 – 2400	650 / 70	1,020	13,500	911,250	9,000	338,000	1.38 / 500	1.00	0.701	600	150	300	0.035	0.02	125	4	F-9
T7S0--7504DN	1800 – 2400	750 / 73	1,180	15,750	1.2×10^6	10,500	460,000	1.50 / 1000	0.972	0.482	600	150	300	0.035	0.02	125	4	F-9
T820--7504DH	200 – 2400	750 / 70	1,175	18,000	1.6×10^6	12,000	600,000	1.52 / 1000	0.927	0.495	400	200	300	0.037	0.020	125	5	F-9
T9G0--1003DH	200 – 2400	1000 / 82	1,590	25,500	3.2×10^6	17,000	1.2×10^6	1.0 / 300	0.904	0.491	600	250	1000	0.023	0.006	125	7	F-10
T9G0--1203DH	200 – 2400	1200 / 85	1,880	40,500	8.2×10^6	27,000	3.0×10^6	0.97 / 1000	0.606	0.268	300	350	300	0.023	0.008	125	7	F-10
TA20--1603DH	200 – 2200	1600 / 80	2,500	44,250	9.7×10^6	29,500	3.63×10^6	1.12 / 1000	0.891	0.215	400	250	300	0.015	0.007	125	9	F-10
T9S0--1803DH	1600 – 2200	1800 / 70	2,827	19,422	1.89×10^6	13,735	1.77×10^6	1.38 / 1500	1.025	0.23	200	400	1000	0.015	0.0025	125	6	F-9
TA20--1803DH	200 – 2200	1800 / 85	2,820	60,000	18.0×10^6	40,000	6.67×10^6	0.89 / 1000	0.719	0.167	400	250	300	0.015	0.007	125	9	F-10
TBK7--250HHE	1200 – 2100	2500 / 72	3,925	67,500	22.7×10^6	45,000	8.5×10^6	1.35 / 2000	0.95	0.123	600	250	500	0.012	0.002	125	10	F-11
TDS5--5003DH	1200 – 2000	5000 / 68	7,854	84,852	3.60×10^7	62,000	1.6×10^7	1.15 / 4000	0.85	0.0658	300	500	500	0.0065	0.0015	125	16	F-13

Phase Control SCRs - Disc/Hockey Puk (Continued) (Refer to device datasheets at www.pwrx.com for test conditions.)

Type	V_{DRM} / V_{RRM} Volts (V_{RSM} = V_{RRM} + 100V)	$I_{t(av)}/T_C$ Amperes/°C (180° sin)	$I_{T(RMS)}$ Amperes (180° sin)	EUROPEAN I_{TSM} Amperes (10ms, $T_{j(max)}$), No V_{RRM} Reapplied)	EUROPEAN i^2t A^2 sec (10ms, $T_{j(max)}$), No V_{RRM} Reapplied)	NORTH AMERICAN i_{TSM} Amperes (8.3ms, $T_{j(max)}$), 100% V_{RRM} Reapplied)	NORTH AMERICAN I^2t A^2 sec (8.3ms, $T_{j(max)}$), 100% V_{RRM} Reapplied)	V_{TM}/I_{TM} Volts/Amperes ($T_{j(max)}$)	V_{TO} Volts ($T_{j(max)}$)	R_T mΩ ($T_{j(max)}$)	di/dt Amperes/µsec (Non-Repetitive)	T_q µsec (Typical)	dV/dt Volts/µsec	$R_{th(j-c)}$ °C/W	$R_{th(c-s)}$ °C/W	$T_{j(max)}$ °C	Outline Drawings Number	Outline Drawings Page
Up to 4500V																		
T8K7--3503DH	3600 – 4500	350 / 76	550	8,250	340,313	5,500	100,000	3.50 / 1000	1.562	2.141	500	250	1000	0.040	0.020	125	5	F-9
T9K7--0802DH	3600 – 4500	800 / 79	1,250	13,500	911,250	9,000	337,500	1.79 / 1000	1.213	0.602	200	500	800	0.023	0.008	125	7	F-10
TAK7--1202DH	3600 – 4400	1200 / 82	1,700	60,000	18.0×10^6	40,000	6.67×10^6	1.90 / 1500	1.262	0.397	400	500	1000	0.015	0.007	125	9	F-10
TAS7--1603DH	3200 – 4400	1650 / 70	2,592	20,742	2.15×10^6	15,154	956,845	2.00 / 1500	0.881	0.374	300	550	800	0.01	0.003	125	8	F-10
TBK7--1702HE	3600 – 4500	1650 / 70	2,590	39,000	7.6×10^6	26,000	2.75×10^6	1.85 / 2000	1.033	0.358	600	400	1000	0.012	0.002	125	10	F-11
TAK7--1803DH	2400 – 3200	1800 / 70	2,827	22,156	2.45×10^6	16,180	1.09×10^6	1.40 / 1500	0.881	0.374	300	550	800	0.15	0.007	125	9	F-10
TBKD--190HDH	3600 – 4500	1890 / 70	2,969	31,678	5.02×10^6	23,000	2.23×10^6	1.70 / 2000	1.13	0.275	200	600	1000	0.012	0l002	125	10	F-11
TC20--2402DH	3600 – 4400	2450 / 74	3,848	28,284	4.00×10^6	20,664	1.78×10^6	1.80 / 3000	0.99	0.271	300	500	400	0.009	0.003	125	13	F-12
TBS4--250HDH	3000 – 3600	2500 / 70	3,927	32,055	5.14×10^6	23,400	2.29×10^6	1.50 / 2000	1.026	0.233	200	600	1000	0.0085	0.002	125	11	F-11
TBSX33300HDH	3300	3000 / 70	4,712	62,750	1.97×10^7	45,800	8.76×10^6	1.27 / 2000	0.909	0.15	200	600	1000	0.0085	0.002	125	11	F-11
TCU4--320HDH	2400 – 2800	3200 / 70	5,027	72,000	2.59×10^7	52,600	1.15×10^7	1.45 / 3000	1.062	0.121	400	400	1000	0.008	0.002	125	12	F-11
TCU4--340HDH	2400 – 2800	3400 / 70	5,341	75,424	2.84×10^7	55,000	1.27×10^7	1.35 / 3000	0.978	0.112	400	400	1000	0.008	0.002	125	12	F-11
TDK4--3302DH	3600 – 4400	3300 / 72	5,184	47,140	1.11×10^7	31,427	1.04×10^7	1.60 / 3000	0.991	0.196	300	400	2000	0.005	0.001	125	15	F-12
TCS4--340HDH	1800 – 2800	3400 / 70	5,341	56,568	1.60×10^7	37,712	1.50×10^7	1.34 / 3000	0.915	0.14	600	400	1000	0.007	0.001	125	14	F-12
TDS4--3402DH	3000 - 3600	3475 / 70	5,459	67,200	2.26×10^7	49,000	2.26×10^7	1.50 / 4000	0.914	0.15	300	600	800	0.007	0.0015	125	16	F-13
Up to 6500V																		
T8KC--3203DH	6000 – 6500	325 / 75	511	4,243	9×10^4	2,950	36,260	4.40 / 1000	1.17	3.26	200	450	1000	0.038	0.007	125	5	F-9
T9KC--0603DH	6000 – 6500	600 / 73	942	7,307	2.67×10^5	5,040	105,840	3.70 / 1500	1.32	1.58	300	600	1000	0.023	0.006	125	7	F-10
TBKC--1203DH	6000 – 6500	1250 / 70	1,963	20,742	2.15×10^6	14,300	852,042	2.70 / 2000	1.153	0.744	200	800	1000	0.011	0.001	125	10	F-11

Phase Control SCRs - Studs (Refer to device datasheets at www.pwrx.com for test conditions.)

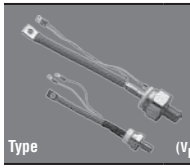

Type	V_{DRM} / V_{RRM} Volts (V_{RSM} = V_{RRM} + 100V)	$I_{t(av)}/T_C$ Amperes/°C (180° sin)	$I_{T(RMS)}$ Amperes (180° sin)	EUROPEAN I_{TSM} Amperes (10ms, $T_{j(max)}$), No V_{RRM} Reapplied)	EUROPEAN I^2t A^2 sec (10ms, $T_{j(max)}$), No V_{RRM} Reapplied)	NORTH AMERICAN i_{TSM} Amperes (8.3ms, $T_{j(max)}$), 100% V_{RRM} Reapplied)	NORTH AMERICAN i^2t A^2 sec (8.3ms, $T_{j(max)}$), 100% V_{RRM} Reapplied)	V_{TM}/I_{TM} Volts/Amperes ($T_{j(max)}$)	V_{TO} Volts ($T_{j(max)}$)	R_T mΩ ($T_{j(max)}$)	di/dt Amperes/µsec (Non-Repetitive)	T_q µsec (Typical)	dV/dt Volts/µsec	$R_{th(j-c)}$ °C/W	$R_{th(c-s)}$ °C/W	$T_{j(max)}$ °C	Outline Drawings Number	Outline Drawings Page
Up to 1600V																		
T500--4004AQ	200 – 1600	40 / 97	63	1,800	16,200	1,200	6,000	2.02 / 100	0.91	11.85	800	100	300	0.28	0.12	125	17	F-13
T500--8004AQ	200 – 1600	80 / 75	125	2,700	36,450	1,800	13,500	1.43 / 100	0.99	3.57	800	100	300	0.28	0.12	125	17	F-13
T600--1504BT	200 – 1600	150 / 90	235	6,000	180,000	4,000	66,000	1.41 / 200	1.07	1.46	800	100	300	0.13	0.075	125	19	F-14
T650--1504BT	200 – 1600	150 / 90	235	6,000	180,000	4,000	66,000	1.41 / 200	1.07	1.46	800	100	300	0.13	0.075	125	18	F-13
T600--1804BT	200 – 1600	175 / 88	275	8,250	340,313	5,500	120,000	1.20 / 200	0.90	1.26	800	100	300	0.13	0.075	125	19	F-14
T650--1804BT	200 – 1600	175 / 88	275	8,250	340,313	5,500	120,000	1.20 / 200	0.90	1.26	800	100	300	0.13	0.075	125	18	F-13
T700--2504BY	200 – 1600	250 / 75	400	10,500	551,250	7,000	205,000	1.16 / 100	1.06	1.01	800	150	300	0.10	0.05	125	21	F-14
T750--2504BY	200 – 1600	250 / 75	400	10,500	551,250	7,000	205,000	1.16 / 100	1.06	1.01	800	150	300	0.10	0.05	125	20	F-14
Up to 2400V																		
T700--3004BY	200 – 2400	300 / 65	470	12,600	793,800	8,400	295,000	0.98 / 100	0.88	0.92	800	150	300	0.10	0.05	125	21	F-14
T750--3005BY	200 – 2400	300 / 65	470	12,600	793,800	8,400	295,000	0.98 / 100	0.88	0.92	800	150	300	0.10	0.05	125	20	F-14
T700--3504BY	200 – 2400	350 / 80	550	15,000	1.1×10^6	10,000	416,000	0.98 / 200	0.83	0.61	800	150	300	0.10	0.05	125	21	F-14
T750--3504BY	200 – 2400	350 / 80	550	15,000	1.1×10^6	10,000	416,000	0.98 / 200	0.83	0.61	800	150	300	0.10	0.05	125	20	F-14

Inverter Grade Disc/Hockey Puk SCRs (Refer to device datasheets at www.pwrx.com for test conditions.)

Type	V_{DRM} / V_{RRM} Volts (V_{RSM} = V_{RRM} + 100V)	$I_{t(av)}/T_C$ Amperes/°C (180° sin)	$I_{T(RMS)}$ Amperes (180° sin)	EUROPEAN I_{TSM} Amperes (10ms, $T_{j(max)}$), No V_{RRM} Reapplied)	EUROPEAN I^2t A^2 sec (10ms, $T_{j(max)}$), No V_{RRM} Reapplied)	NORTH AMERICAN i_{TSM} Amperes (8.3ms, $T_{j(max)}$), No V_{RRM} Reapplied)	NORTH AMERICAN i^2t A^2 sec (8.3ms, $T_{j(max)}$), No V_{RRM} Reapplied)	V_{TM}/I_{TM} Volts/Amperes ($T_{j(max)}$)	V_{TO} Volts ($T_{j(max)}$)	R_T mΩ ($T_{j(max)}$)	di/dt Amperes/µsec (Non-Repetitive)	T_q µsec (Typical)	dV/dt Volts/µsec	$R_{th(j-c)}$ °C/W	$R_{th(c-s)}$ °C/W	$T_{j(max)}$ °C	Outline Drawings Number	Outline Drawings Page
Up to 1200V																		
T727--35*4DN	100 – 1200	350 / 70	550	10,500	551,250	7,000	205,000	1.70 / 600	1.27	0.71	800	15 – 60	300	0.06	0.02	125	5	F-9
T72H--35*4DN	100 – 1200	350 / 70	550	10,500	551,250	7,000	205,000	2.09 / 500	1.77	0.68	1200	10 – 50	300	0.06	0.02	125	5	F-9
T727--40*4DN	100 – 800	400 / 70	625	10,500	551,250	7,000	205,000	1.55 / 500	1.40	0.34	800	10 – 50	300	0.06	0.02	125	5	F-9
T72H--40*4DN	100 – 800	400 / 70	625	10,500	551,250	7,000	205,000	1.49 / 500	1.19	0.55	1200	10 – 20	300	0.06	0.02	125	5	F-9
T7SH--40*4DN	100 – 1200	400 / 70	700	12,000	720,000	8,000	267,000	2.11 / 500	1.76	0.73	1200	10 – 50	300	0.045	0.02	125	4	F-9
T727--48*4DN	100 – 800	475 / 70	750	12,000	720,000	8,000	265,000	1.37 / 500	1.35	0.44	800	15 – 50	300	0.06	0.02	125	5	F-9
T72H--48*4DN	100 – 800	475 / 70	750	12,000	720,000	8,000	265,000	1.37 / 500	1.14	0.44	1200	20 – 40	300	0.06	0.02	125	5	F-9
T7S7--50*4DN	100 – 1200	500 / 70	786	12,000	720,000	8,000	267,000	1.62 / 500	1.29	0.65	800	15 – 60	300	0.035	0.02	125	2	F-8
T7SH--50*4DN	100 – 800	500 / 70	780	12,750	812,813	8,500	301,000	1.44 / 500	1.18	0.43	1200	10 – 20	300	0.045	0.02	125	4	F-9
T7S7--55*4DN	100 – 800	550 / 70	864	12,750	812,813	8,500	301,000	1.53 / 500	1.36	0.34	800	10 – 50	300	0.035	0.02	125	2	F-8
T7SH--60*4DN	100 – 800	600 / 70	950	13,500	911,250	9,000	338,000	1.04 / 500	0.90	0.28	1200	20 – 40	300	0.045	0.02	125	4	F-9
T7S7--65*4DN	100 – 800	650 / 70	1,026	14,250	1.0×10^6	9,500	376,000	1.36 / 500	1.15	0.40	800	10 – 50	300	0.035	0.02	125	2	F-8
Up to 1600V																		
T627--15*4DN	100 – 1600	150 / 70	235	5,250	137,813	3,500	50,000	1.64 / 100	1.41	1.80	800	10 – 50	300	0.08	0.02	125	1	F-8
T627--20*4DN	100 – 1600	200 / 70	315	6,000	180,000	4,000	65,000	1.48 / 100	1.27	1.50	800	10 – 50	300	0.08	0.02	125	1	F-8
T627--25*4DN	100 – 1600	250 / 70	400	6,750	227,813	4,500	84,000	1.38 / 100	1.22	1.12	800	10 – 50	300	0.08	0.02	125	1	F-8
T727--45*4DN	100 – 1600	450 / 70	700	12,000	720,000	8,000	265,000	1.42 / 500	1.14	0.57	800	15 – 60	300	0.06	0.02	125	5	F-9
T72H--45*4DN	100 – 1600	450 / 70	700	11,250	632,813	7,500	234,000	1.55 / 500	1.08	0.79	1200	15 – 50	300	0.06	0.02	125	5	F-9
T7SH--45*4DN	100 – 1600	450 / 70	700	12,750	812,813	8,500	301,000	1.80 / 800	1.05	0.96	1200	15 – 50	300	0.045	0.02	125	4	F-9
T7S7--60*4DN	100 – 1600	600 / 70	943	13,500	911,250	9,000	338,000	1.44 / 500	1.16	0.56	800	15 – 60	300	0.035	0.02	125	2	F-8
T82F--65*3DN	100 – 1400	650 / 70	1,000	12,750	812,813	8,500	300,000	1.75 / 1000	1.46	0.30	1000	10 – 50	400	0.037	0.02	125	5	F-9
T82F--75*3DN	100 – 1400	750 / 70	1,180	15,000	1.1×10^6	10,000	416,000	1.52 / 1000	1.21	0.29	1200	25 – 60	400	0.037	0.02	125	5	F-9
T9GH--08*2DH	100 – 1600	800 / 70	1,250	15,000	1.1×10^6	10,000	416,000	1.98 / 1000	1.58	0.41	1000	20 – 100	400	0.023	0.075	125	7	F-10
T9GH--09*2DH	100 – 1600	900 / 70	1,400	19,500	1.9×10^6	13,000	700,000	1.73 / 1000	1.32	0.40	1000	20 – 100	400	0.023	0.075	125	7	F-10
T9GH--10*2DH	100 – 1600	1000 / 70	1,570	22,500	2.5×10^6	15,000	937,000	1.70 / 1000	1.29	0.40	1000	20 – 60	400	0.023	0.075	125	7	F-10
T9GH--11*2DH	100 – 1600	1100 / 70	1,725	25,500	3.2×10^6	17,000	1.2×10^6	1.39 / 1000	1.12	0.25	1000	40 – 60	100	0.023	0.075	125	7	F-10
Up to 2000V																		
T7SH--36*4DN	1400 – 1800	360 / 70	565	9,000	405,000	6,000	297,000	2.19 / 500	1.81	0.81	800	40 – 60	300	0.045	0.02	125	4	F-9
T72H--42*4DN	100 – 1800	420 / 70	650	10,200	520,200	6,800	205,000	1.67 / 700	1.27	0.57	1200	15 – 100	300	0.06	0.02	125	5	F-9
T7SH--46*4DN	100 – 1800	460 / 70	720	10,200	520,200	6,800	301,000	1.47 / 500	1.22	0.58	800	15 – 70	300	0.045	0.02	125	4	F-9
C712	100 – 2000	1000 / 70	1,570	30,000	4.5×10^6	20,000	1.6×10^6	1.50 / 1000	1.13	0.35	800	55	500	0.023	0.075	125	7	F-10
C770	100 – 2000	2100 / 70	3,300	57,000	16.2×10^6	38,000	6.0×10^6	1.55 / 1000	1.27	0.26	800	80	500	0.012	0.002	125	10	F-11

Inverter Grade Stud SCRs (Refer to device datasheets at www.pwrx.com for test conditions.)

Type	V_{DRM} / V_{RRM} Volts (V_{RSM} = V_{RRM} + 100V)	$I_{t(av)}$/T_C Amperes/°C (180° sin)	$I_{T(RMS)}$ Amperes (180° sin)	EUROPEAN I_{TSM} Amperes (10ms, $T_{j(max)}$), No V_{RRM} Reapplied)	EUROPEAN I^2t A^2 sec (10ms, $T_{j(max)}$), No V_{RRM} Reapplied)	NORTH AMERICAN i_{TSM} Amperes (8.3ms, $T_{j(max)}$), No V_{RRM} Reapplied)	NORTH AMERICAN i^2t A^2 sec (8.3ms, $T_{j(max)}$), No V_{RRM} Reapplied)	V_{TM}/I_{TM} Volts/Amperes ($T_{j(max)}$)	V_{TO} Volts ($T_{j(max)}$)	R_T mΩ ($T_{j(max)}$)	di/dt Amperes/µsec (Non-Repetitive)	T_q µsec (Typical)	dV/dt Volts/µsec	$R_{th(j-c)}$ °C/W	$R_{th(c-s)}$ °C/W	$T_{j(max)}$ °C	Outline Drawings Number	Outline Drawings Page
Up to 1200V																		
T607--13*4BT	100 – 1200	125 / 70	200	5,250	137,813	3,500	50,000	1.63 / 100	1.37	2.10	800	10 – 50	300	0.13	0.08	125	19	F-14
T707--25*4BY	100 – 1200	250 / 70	400	10,500	551,250	7,000	205,000	1.46 / 500	1.29	0.43	800	25 – 60	300	0.10	0.05	125	21	F-14
T707--28*4BY	100 – 1000	275 / 70	430	10,500	551,250	7,000	205,000	1.58 / 700	1.34	0.33	800	10 – 50	300	0.10	0.05	125	21	F-14
Up to 1600V																		
T507--40*4AQ	100 – 1600	40 / 70	63	1,500	11,250	1,000	4,000	2.36 / 100	1.00	14.81	800	10 – 50	200	0.28	0.12	125	17	F-13
T507--80*4AQ	100 – 1600	80 / 70	125	2,100	22,050	1,400	8,150	1.88 / 100	0.95	9.87	800	10 – 50	200	0.28	0.12	125	17	F-13
T607--15*4BT	100 – 1600	150 / 70	235	6,000	180,000	4,000	65,000	1.47 / 100	1.25	1.67	800	10 – 50	300	0.13	0.08	125	19	F-14
T607--18*4BT	100 – 1600	175 / 70	275	6,750	227,813	4,500	84,000	1.28 / 100	1.13	1.23	800	10 – 50	300	0.13	0.08	125	19	F-14
T707--30*4BY	100 – 1600	300 / 70	475	12,000	720,000	8,000	265,000	1.45 / 800	1.05	0.53	800	25 – 60	300	0.10	0.05	125	21	F-14
T707--33*4BY	100 – 800	325 / 70	500	12,000	720,000	8,000	265,000	1.52 / 1000	1.17	0.32	800	10 – 50	300	0.10	0.05	125	21	F-14

1 T620, T625, T627

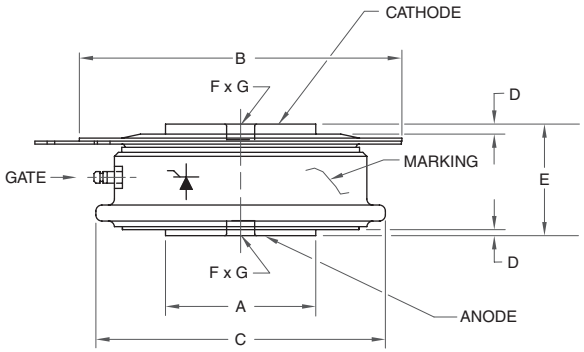

Dim.	Inches	Millimeters
A	0.752 Max.	19.1 Max.
B	1.6575 Dia.	42.1 Dia.
C	1.461 Dia.	37.1 Dia.
D	0.0197 Min.	0.5 Min.

Dim.	Inches	Millimeters
E	0.565 Max.	14.4 Max.
F	0.142 Dia.	3.6 Dia.
G	0.079 Deep	2.0 Deep

2 T7H8, T7S7

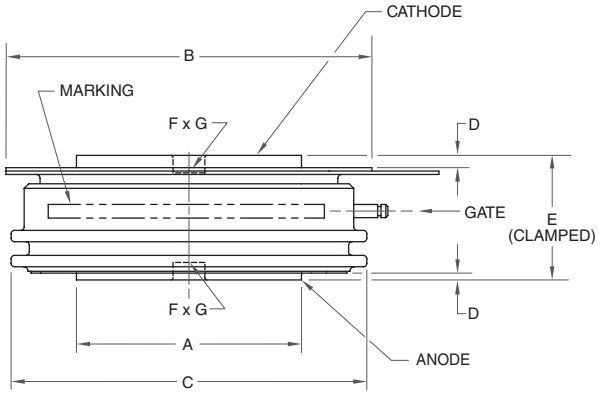

Dim.	Inches	Millimeters
A	0.996 Dia.	25.3 Dia.
B	1.6496 Dia.	41.9 Dia.
C	1.5866 Dia.	40.3 Dia.
D	0.028 Min.	0.7 Min.

Dim.	Inches	Millimeters
E	0.606 Max.	15.4 Max.
F	0.142 Dia.	3.6 Dia.
G	0.0787 Deep	2.0 Deep

3 T7M8

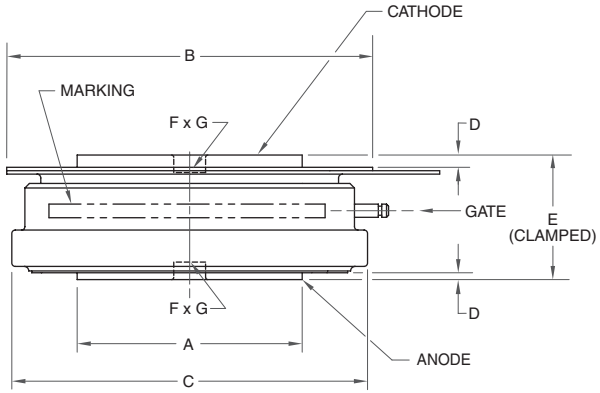

Dim.	Inches	Millimeters
A	0.996 Dia.	25.3 Dia.
B	1.6496 Dia.	41.9 Dia.
C	1.5866 Dia.	40.3 Dia.
D	0.028 Min.	0.7 Min.

Dim.	Inches	Millimeters
E	0.606 Max.	15.4 Max.
F	0.142 Dia.	3.6 Dia.
G	0.0787 Deep	2.0 Deep

4 T7SH, T7S0

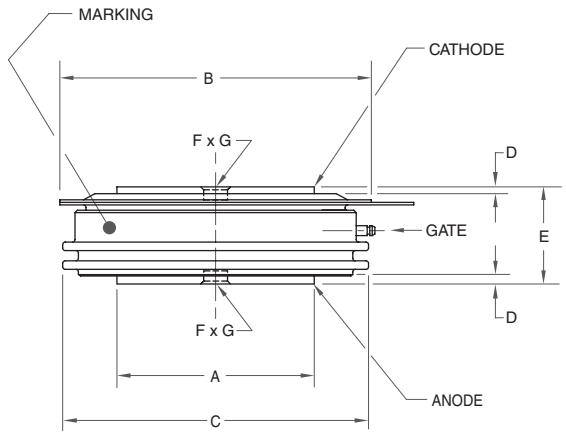

Dim.	Inches	Millimeters
A	1.180 Dia.	29.97 Dia.
B	1.90 Dia.	48.26 Dia.
C	1.850 Dia.	46.99 Dia.
D	0.025 Min.	0.64 Min.

Dim.	Inches	Millimeters
E	0.605 Max.	15.37 Max.
F	0.145 Dia.	3.68 Dia.
G	0.082 Deep	2.08 Deep

5 T720, T72H, T727, T8KC, T8K7, T82F, T82O

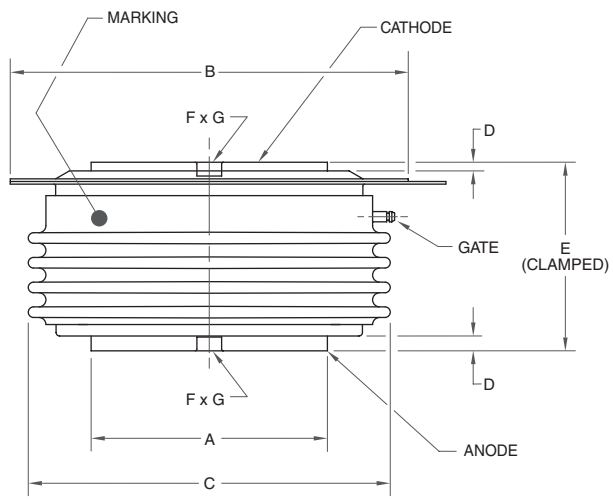

Dim.	Inches	Millimeters
A	1.34 Dia.	34.0 Dia.
B	2.28 Dia.	57.9 Dia.
C	2.05 Dia.	52.1 Dia.
D	0.03 Min.	0.76 Min.

Dim.	Inches	Millimeters
E	1.060 Max.	26.92 Max.
F	0.140 Dia.	3.56 Dia.
G	0.078 Deep	1.98 Deep

6 T9S0

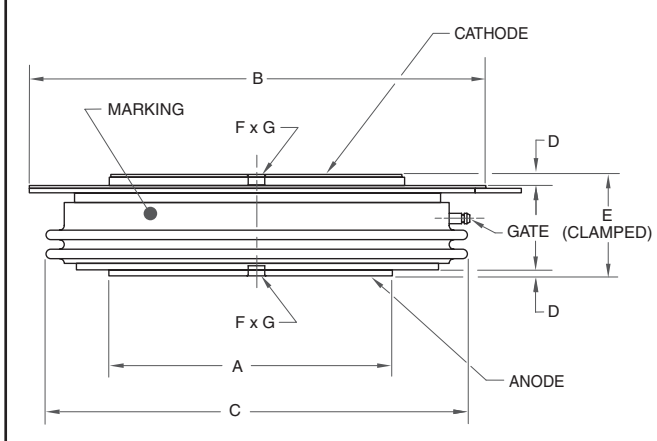

Dim.	Inches	Millimeters
A	1.85 Dia.	47.0 Dia.
B	2.91 Dia.	74.0 Dia.
C	2.64 Dia.	67.0 Dia.
D	0.028 Min.	0.7 Min.

Dim.	Inches	Millimeters
E	0.65 Max.	16.5 Max.
F	0.14 Dia.	3.5 Dia.
G	0.0787 Deep	2.0 Deep

7 C712, T9GH, T9GO, T9KC, T9K7

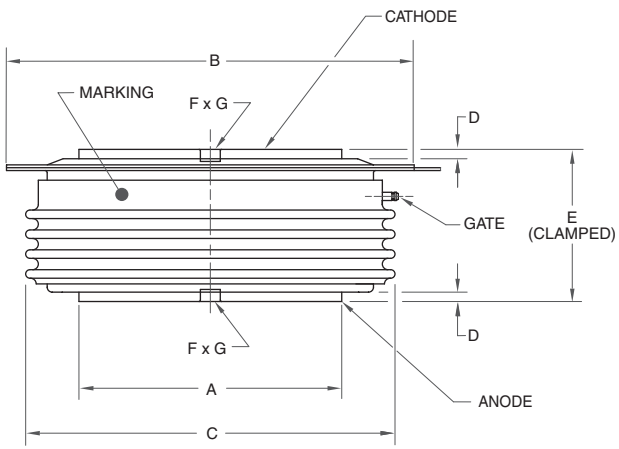

Dim.	Inches	Millimeters
A	1.858 Dia.	47.2 Dia.
B	2.902 Dia.	73.7 Dia.
C	2.642 Dia.	67.1 Dia.
D	0.028 Min.	0.7 Min.

Dim.	Inches	Millimeters
E	1.091 Max.	27.7 Max.
F	0.142 Dia.	3.6 Dia.
G	0.0787 Deep	2.0 Deep

8 TAS7, TAS0

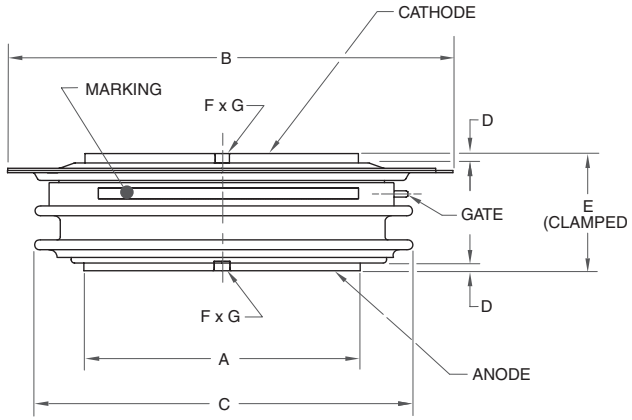

Dim.	Inches	Millimeters
A	2.480 Dia.	63.0 Dia.
B	3.937 Dia.	100.0 Dia.
C	3.551 Dia.	90.2 Dia.
D	0.028 Min.	0.7 Min.

Dim.	Inches	Millimeters
E	1.03 Max.	26.162 Max.
F	0.14 Dia.	3.556 Dia.
G	0.0787 Deep	2.0 Deep

9 TAK7, TA20

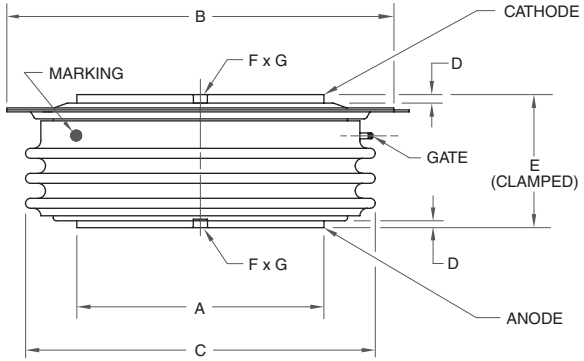

Dim.	Inches	Millimeters
A	2.480 Dia.	63.0 Dia.
B	3.937 Dia.	100.0 Dia.
C	3.551 Dia.	90.2 Dia.
D	0.028 Min.	0.7 Min.

Dim.	Inches	Millimeters
E	1.362 Max.	34.6 Max.
F	0.142 Dia.	3.6 Dia.
G	0.0787 Deep	2.0 Deep

10 C770, TBKC, TBKD, TBK5, TBK7

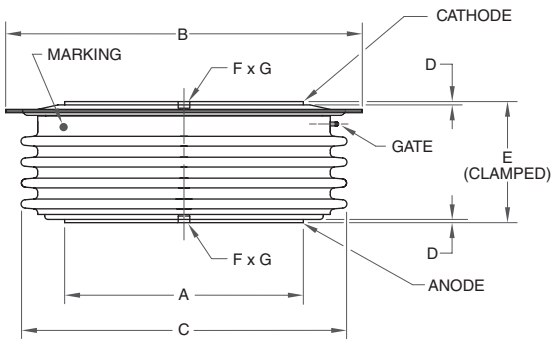

Dim.	Inches	Millimeters
A	2.882 Dia.	73.2 Dia.
B	4.36 Dia.	110.7 Dia.
C	3.961 Dia.	100.6 Dia.
D	0.028 Min.	0.7 Min.

Dim.	Inches	Millimeters
E	1.5 Max.	38.1 Max.
F	0.142 Dia.	3.6 Dia.
G	0.0787 Deep	2.0 Deep

11 TBS4, TBS7, TBSX

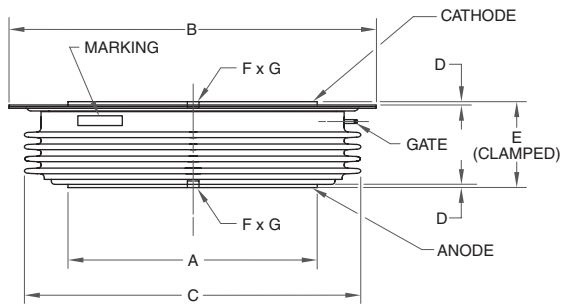

Dim.	Inches	Millimeters
A	2.88 Dia.	73.2 Dia.
B	4.36 Dia.	110.7 Dia.
C	3.95 Dia.	100.3 Dia.
D	0.03 Min.	0.76 Min.

Dim.	Inches	Millimeters
E	1.05 Max.	26.67 Max.
F	0.14 Dia.	3.56 Dia.
G	0.08 Deep	2.03 Deep

12 TCU4

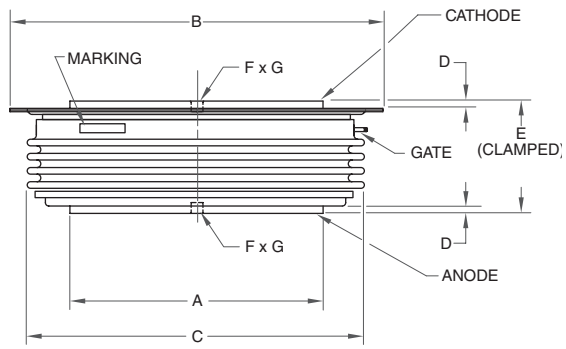

Dim.	Inches	Millimeters
A	3.11 Dia.	84.1 Dia.
B	4.72 Dia.	120.0 Dia.
C	4.37 Dia.	111.0 Dia.
D	0.028 Min.	0.7 Min.

Dim.	Inches	Millimeters
E	1.03 Max.	26.2 Max.
F	0.142 Dia.	3.6 Dia.
G	0.0787 Deep	2.0 Deep

13 TC20

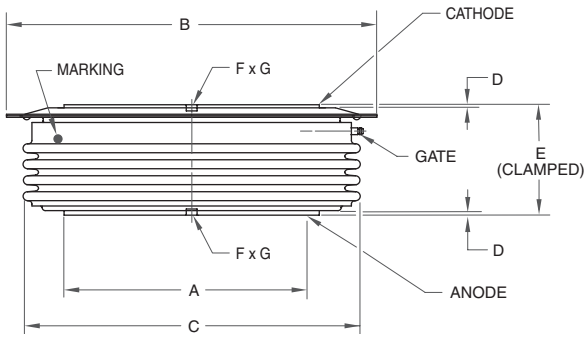

Dim.	Inches	Millimeters
A	3.11 Dia.	84.1 Dia.
B	4.8898 Dia.	124.2 Dia.
C	4.37 Dia.	111.0 Dia.
D	0.028 Min.	0.7 Min.

Dim.	Inches	Millimeters
E	1.5 Max.	38.1 Max.
F	0.142 Dia.	3.6 Dia.
G	0.0787 Deep	2.0 Deep

14 TCS4

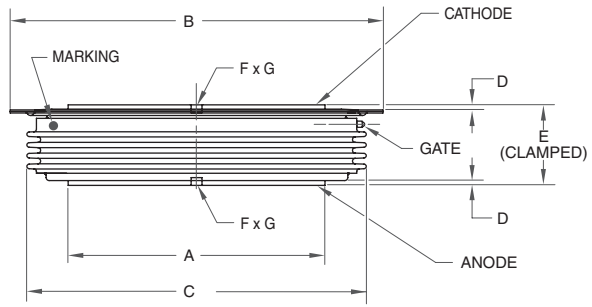

Dim.	Inches	Millimeters
A	3.311 Dia.	84.1 Dia.
B	4.889 Dia.	124.2 Dia.
C	4.370 Dia.	111.0 Dia.
D	0.028 Min.	0.7 Min.

Dim.	Inches	Millimeters
E	1.059 Max.	26.9 Max.
F	0.142 Dia.	3.6 Dia.
G	0.0787 Deep	2.0 Deep

15 TDK4

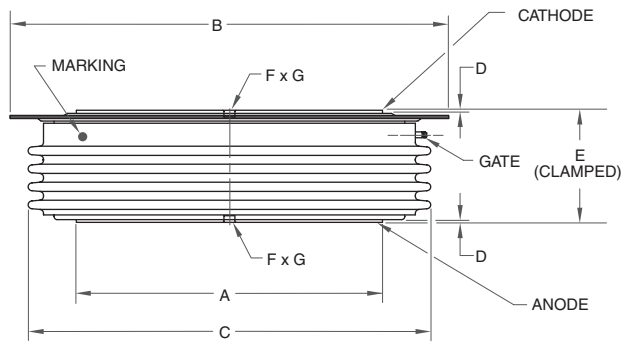

Dim.	Inches	Millimeters
A	3.913 Dia.	99.4 Dia.
B	5.661 Dia.	143.8 Dia.
C	5.181 Dia.	131.6 Dia.
D	0.028 Min.	0.7 Min.

Dim.	Inches	Millimeters
E	1.5 Max.	38.1 Max.
F	0.142 Dia.	3.6 Dia.
G	0.0787 Deep	2.0 Deep

16 TDS4, TDS5

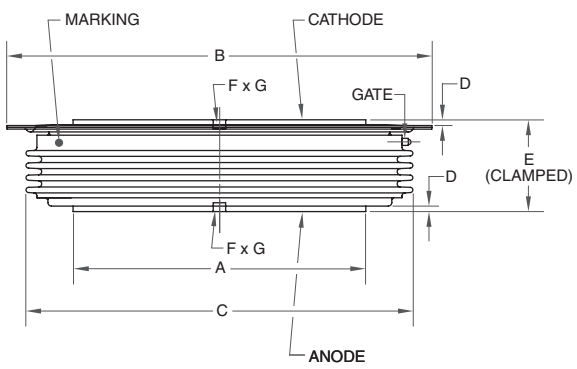

Dim.	Inches	Millimeters
A	3.913 Dia.	99.4 Dia.
B	5.661 Dia.	143.8 Dia.
C	5.181 Dia.	131.6 Dia.
D	0.028 Min.	0.7 Min.

Dim.	Inches	Millimeters
E	1.059 Max.	26.9 Max.
F	0.142 Dia.	3.6 Dia.
G	0.0787 Deep	2.0 Deep

17 T500, T507

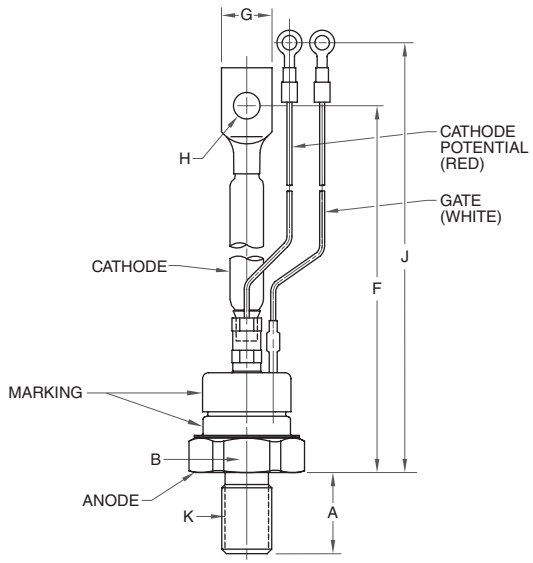

Dim.	Inches	Millimeters
A	0.815 Max.	20.7 Max.
B	1.059 Max.	26.9 Max.
	(Across Flats)	
F	6.240 Max.	158.5 Max.

Dim.	Inches	Millimeters
G	0.512 Max.	13.0 Max.
H	0.268 Dia.	6.8 Dia.
J	7.559 Max.	192.0 Max.
K	0.500-20 UNF-2A Thread	

18 T650

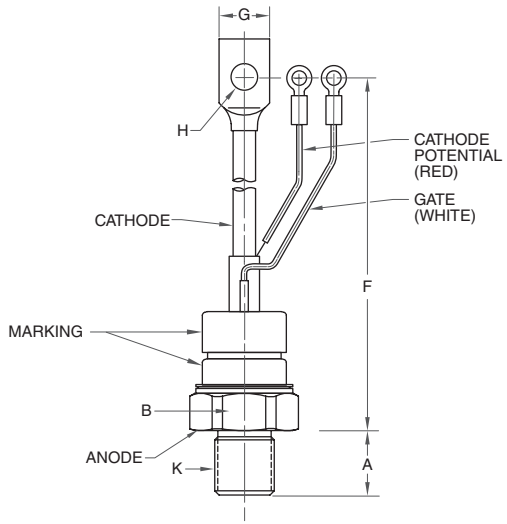

Dim.	Inches	Millimeters
A	0.822 Max.	20.88 Max.
B	1.248 Max.	31.78 Max.
	(Across Flats)	
F	8.03 Max.	203.96 Max.

Dim.	Inches	Millimeters
G	0.63 Max.	16.0 Max.
H	0.281 Dia.	7.14 Dia.
K	M20 x 1.5	

19 T600, T607

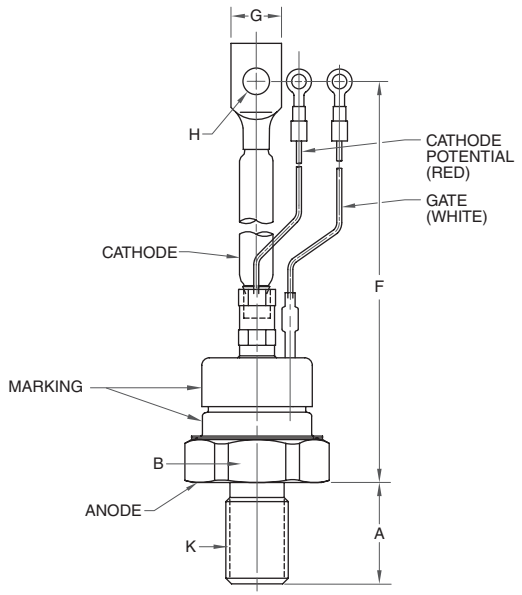

Dim.	Inches	Millimeters
A	1.063 Max.	27.0 Max.
B	1.252 Max.	31.8 Max.
	(Across Flats)	
F	8.032 Max.	204.0 Max.

Dim.	Inches	Millimeters
G	0.63 Max.	16.0 Max.
H	0.2795 Dia.	7.1 Dia.
K	0.75-16 UNF-2A Thread	

20 T750

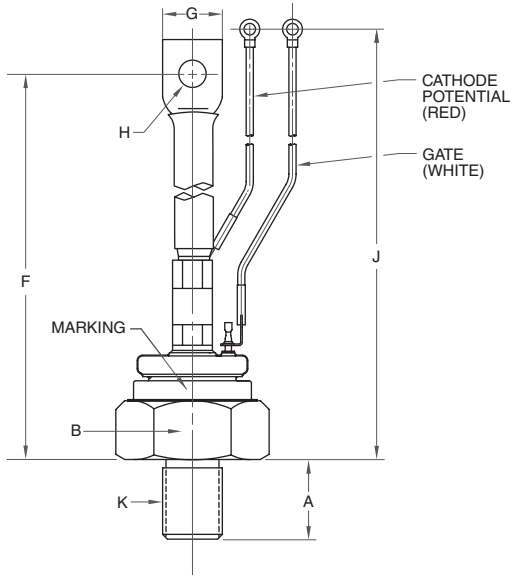

Dim.	Inches	Millimeters
A	1.08 Max.	27.4 Max.
B	1.748 Max.	44.4 Max.
	(Across Flats)	
F	9.78 Max.	248.4 Max.

Dim.	Inches	Millimeters
G	0.847 Max.	21.5 Max.
H	0.355 Dia.	9.0 Dia.
J	10.18 Max.	258.5 Max.
K	M24 x 1.5	

21 T700, T707

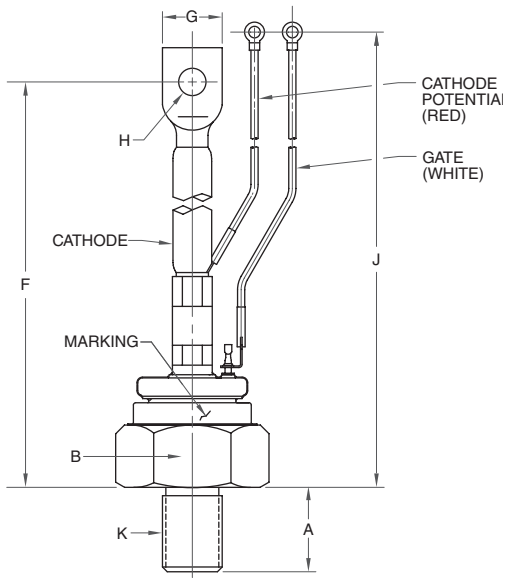

Dim.	Inches	Millimeters
A	1.083 Max.	27.5 Max.
B	1.750 Max.	44.45 Max.
	(Across Flats)	
F	9.784 Max.	248.5 Max.

Dim.	Inches	Millimeters
G	0.756 Max.	19.2 Max.
H	0.343 Dia.	8.7 Dia.
J	10.181 Max.	258.6 Max.
K	0.750-16 UNF-2A Thread	

DISCRETE RECTIFIERS

General Purpose Rectifiers
Applications Include:
- Battery Chargers
- Induction Heating/Melting
- Motor Controls
- Power Supplies
- Transportation
- Welding

Fast Recovery Rectifiers
Applications Include:
- Induction Heating
- Medical Equipment
- Motor Controls
- Transportation
- Welding

Packages:
- Discrete Discs
- Discrete Studs

Features:
- Nickel Plating Finish
- Hermetic Encapsulation for Long-Term Reliability to 1 x 10^{-6} cc/He/sec

TABLE OF CONTENTS

Numbering System G-2
General Purpose Disc/Hockey Puk Diodes G-3
General Purpose Welding Diodes G-4
General Purpose Stud Diodes G-5
Fast Recovery Diodes G-6
Outline Drawings G-7

General Purpose:
VOLTAGE: 100V TO 6500V
CURRENT: 100A TO 12,000A
Fast Recovery:
VOLTAGE: 200V TO 3600V
CURRENT: 125A TO 1500A

Numbering System

R5001210XXWA is a 100 Ampere, 1200 Volt, General Purpose Diode (STUD)

R500 12 10 XX WA

(1) (2) (3) (4) (5)

R6031225HSYA is a 250 Ampere, 1200 Volt, Fast Recovery Diode (STUD)

R603 12 25 HS YA

(1) (2) (3) (4) (5)

R6201250XXOO is a 500 Ampere, 1200 Volt, General Purpose Diode (DISC)

R620 12 50 XX OO

(1) (2) (3) (4) (5)

R6221240HSOO is a 400 Ampere, 1200 Volt, Fast Recovery Diode (DISC)

R622 12 40 HS OO

(1) (2) (3) (4) (5)

(1) Type Number

(2) Voltage Rating (x 100)

(3) Current Rating:
R5, R6 (x 10)
R7, R8, R9, RA, RB (x 100)

(4) Reverse Recovery Time

Code	Time (μsec)	Code	Time (μsec)
XX	Standard Recovery	LS	0.7
AS	5.0	MS	0.6
BS	4.0	NS	0.2
CS	3.0	OS	4.5
DS	2.5	PS	0.5
ES	2.0	QS	0.4
FS	1.5	RS	0.3
GS	1.25	TS	3.5
HS	1.0	US	2.75
IS	5.5	VS	2.25
JS	0.9	ZS	10.0
KS	0.8		

(5) Lead Code

Device	Code	Description
R50* Stud	WA	Power Lead: 4.48" from seating plane to center of 0.281" diameter hole in terminal lug
R60* Stud	YA	Power Lead: 5.44" from seating plane to center of 0.343" diameter hole in terminal lug
R70* Stud	UA	Power Lead: 9.66" from seating plane to center of 0.343" diameter hole in terminal lug (Note: High voltage R7 studs with convoluted seal will be 9.96" from seating plane to center of 0.343" diameter hole in terminal lug)

General Purpose Disc/Hockey Puk Diodes (Refer to device datasheets at www.pwrx.com for test conditions.)

Type	V_{RRM} Volts ($V_{RMS} = V_{RRM} + 100V$)	$I_{F(av)}/T_C$ Amperes/°C (180° sin)	$I_{F(RMS)}$ Amperes (180° sin)	EUROPEAN I_{FSM} Amperes (10ms, $T_{j(max)}$, No V_{RRM} Reapplied)	EUROPEAN I^2t A^2sec (10ms, $T_{j(max)}$, No V_{RRM} Reapplied)	NORTH AMERICAN I_{FSM} Amperes (8.3ms, $T_{j(max)}$, 100% V_{RRM} Reapplied)	NORTH AMERICAN I^2t A^2sec (8.3ms, $T_{j(max)}$, 100% V_{RRM} Reapplied)	V_{FM}/I_{FM} Volts/Amperes ($T_{j(max)}$)	V_{TO} Volts ($T_{j(max)}$)	R_T mΩ ($T_{j(max)}$)	$R_{th(j-c)}$ °C/W	$R_{th(c-s)}$ °C/W	$T_{j(max)}$ °C	Outline Drawings Number	Page
Up to 1200V															
RA20--48XX	200 – 1200	4800 / 98	7,535	73,500	27.0×10^6	49,000	10.0×10^6	0.71 / 1000	0.65128	0.06315	0.013	0.001	190	7	G-9
RBS8--70XX	200 – 600	7000 / 79	11,000	90,000	40.5×10^6	60,000	1.5×10^6	0.70 / 1000	0.64564	0.04421	0.0095	0.002	175	9	G-9
RDS8--10XX	200 – 1200	10,000 / 90	15,708	111,000	5.13×10^7	120,000	6.00×10^7	0.75 / 4000	0.642	2.28×10^{-4}	0.0075	0.0015	175	12	G-10
Up to 2000V															
R7S0--08XX	200 – 1600	800 / 121	1,250	12,750	812,813	8,500	301,000	1.95 / 2000	0.91169	0.51788	0.035	0.02	175	2	G-7
R720--12XX	200 – 1600	1200 / 106	1,885	18,750	1.7×10^6	12,500	650,700	0.91 / 1000	0.68	0.24	0.055	0.02	175 – 200	4	G-8
R7S0--12XX	200 – 1600	1200 / 86	1,875	13,500	911,250	9,000	337,500	1.25 / 2000	0.831	0.441	0.035	0.02	175	2	G-7
R7S0--16XX	200 – 1600	1600 / 98	2,500	21,000	2.2×10^6	14,000	816,700	1.2 / 2000	0.62955	0.2929	0.035	0.02	200	2	G-7
R9G0--22XX	200 – 1600	2200 / 134	3,455	45,000	10.1×10^6	30,000	3.7×10^6	0.97 / 2000	0.79109	0.08773	0.020	0.0075	150	5	G-8
R9S0--30XX	600 – 1600	3000 / 115	4,710	45,000	10.1×10^6	30,000	3.7×10^6	1.10 / 1500	0.912	0.089	0.0145	0.006	175	6	G-8
RBK8--63XX	1200 – 1600	6300 / 100	9896	115,900	6.72×10^7	84,600	2.99×10^7	0.85 / 4000	0.688	0.0362	0.0115	0.002	190	10	G-10
RBS8--72XX	1200 – 1600	7200 / 84	11,310	115,900	6.72×10^7	84,600	2.99×10^7	0.90 / 4000	0.704	0.0479	0.0095	0.002	190	9	G-9
RCS8--80XX	200 – 1400	8000	12,566	TBD	TBD	TBD	TBD	TBD	TBD	TBD	TBD	TBD	175	11	G-10
Up to 2600V															
R620--30XX	200 – 2400	300 / 142	470	8,250	340,313	5,500	125,000	1.33 / 500	0.92	0.88	0.095	0.02	150 – 190	1	G-7
R620--40XX	200 – 2400	400 / 128	625	9,000	405,000	6,000	150,000	1.25 / 500	0.89	0.74	0.095	0.02	150 – 190	1	G-7
R620--50XX	200 – 2400	500 / 114	785	9,750	475,313	6,500	175,000	1.17 / 500	0.85	0.63	0.095	0.02	150 – 190	1	G-7
R7S0--08XX	1800 – 2400	800 / 121	1,250	12,750	812,813	8,500	301,000	1.95 / 2000	0.91169	0.51788	0.035	0.02	175	3	G-7
R720--09XX	200 – 2600	900 / 110	1,415	12,750	812,813	8,500	301,000	1.26 / 1000	0.84	0.42	0.055	0.02	150 – 200	4	G-8
R7S0--12XX	1800 – 2400	1200 / 86	1,875	13,500	911,250	9,000	337,500	1.25 / 2000	0.38717	0.4301	0.035	0.02	175	3	G-7
R820--16XX	200 – 2600	1600 / 82	2,513	12,950	6.99×10^5	14,000	8.17×10^5	1.06 / 1500	0.68	0.25	0.035	0.015	175	4	G-8
R9G0--18XX	200 – 2400	1800 / 110	2,825	32,250	5.2×10^6	21,500	1.9×10^6	1.25 / 2000	0.81366	0.2242	0.02	0.008	175	5	G-8
RA20--36XX	200 – 2400	3600 / 100	5,650	60,000	18.0×10^6	40,000	6.67×10^6	0.79 / 1000	0.66324	0.1134	0.013	0.007	175	7	G-9
RBK8--50XX	1800 – 2400	5000 / 90	7854	91,500	3.49×10^7	66,800	1.86×10^7	0.95 / 4000	0.661	0.0659	0.0115	0.002	175	10	G-10
RAS8--54XX	1600 – 2400	5450 / 90	8561	115,000	6.61×10^7	84,000	2.94×10^7	1.15 / 3000 (T_j = 25°C)	0.734	0.0665	0.011	0.002	175	8	G-9
RBS8--56XX	1800 – 2400	5680 / 90	8922	103,700	4.48×10^7	75,700	2.39×10^7	0.95 / 4000	0.661	0.0659	0.0095	0.002	175	9	G-9
RDS8--80XX	200 – 2500	8000 / 90	12,566	150,000	3.57×10^7	100,000	4.17×10^7	0.82 / 4000	0.654	3.82×10^{-2}	0.007	0.001	175	12	G-10
Up to 3200V															
RBK8--40XX	200 – 3200	4000 / 82	6,280	75,000	28.1×10^6	50,000	10.4×10^6	0.78 / 1000	0.69989	0.09373	0.0115	0.002	160	10	G-10
RBS8--45XX	2200 – 3200	4500 / 94	7069	83,250	3.47×10^7	60,800	1.54×10^7	1.00 / 2000	0.786	0.0997	0.0095	0.002	175	9	G-9
RDK8--85XX	2400 – 3000	8500 / 90	13,352	92,500	4.28×10^7	67,500	1.90×10^7	0.82 / 4000	0.762	5.28×10^{-2}	0.0063	0.001	160	13	G-11
RDS8--90XX	1400 – 3000	9000	14,137	TBD	TBD	TBD	TBD	TBD	TBD	TBD	0.0075	0.0015	175	12	G-10

General Purpose Disc/Hockey Puk Diodes (Refer to device datasheets at www.pwrx.com for test conditions.)

Type	V_{RRM} Volts ($V_{RMS} = V_{RRM} + 100V$)	$I_{F(av)}/T_C$ Amperes/°C (180° sin)	$I_{F(RMS)}$ Amperes (180° sin)	EUROPEAN I_{FSM} Amperes (10ms, $T_{j(max)}$, No V_{RRM} Reapplied)	EUROPEAN I^2t A^2sec (10ms, $T_{j(max)}$, No V_{RRM} Reapplied)	NORTH AMERICAN I_{FSM} Amperes (8.3ms, $T_{j(max)}$, 100% V_{RRM} Reapplied)	NORTH AMERICAN I^2t A^2sec (8.3ms, $T_{j(max)}$, 100% V_{RRM} Reapplied)	V_{FM}/I_{FM} Volts/Amperes ($T_{j(max)}$)	V_{TO} Volts ($T_{j(max)}$)	R_T mΩ ($T_{j(max)}$)	$R_{th(j-c)}$ °C/W	$R_{th(c-s)}$ °C/W	$T_{j(max)}$ °C	Outline Drawings Number	Outline Drawings Page
Up to 6500V															
R720--06XX	200 – 4400	600 / 136	945	10,500	551,250	7,000	204,000	1.54 / 1000	0.92	0.61	0.055	0.02	150 – 200	4	G-8
R8K8--06XX	6000 – 6500	600 / 100	942	7,300	2.66×10^5	5,300	1.19×10^5	1.80 / 800 (T_j = 25°C)	0.77	1.08	0.035	0.015	150	4	G-8
R820--07XX	4400 – 5200	690 / 100	1,084	6,938	2.41×10^5	7,500	2.34×10^5	1.94 / 1500	1.0	0.62	0.035	0.015	150	4	G-8
R9G0--12XX	200 – 5400	1200 / 102	1,880	24,000	2.8×10^6	16,000	1.1×10^6	1.4 / 1000	1.07197	0.32357	0.020	0.008	150	5	G-8
R9G0--14XX	6000 – 6500	1360 / 80	2,136	15,250	1.6×10^6	12.500	6.51×10^6	1.61 / 1500	0.793	0.521	0.20	0.0006	150	5	G-8
RA20--20XX	200 – 5400	2000 / 99	3,140	36,000	6.4×10^6	24,000	2.4×10^6	1.39 / 2000	0.96347	0.20721	0.013	0.007	150	7	G-9
RA20--25XX	200 – 4200	2500 / 100	3,920	42,000	8.8×10^6	28,000	3.2×10^6	0.87 / 1000	0.74116	0.1320	0.013	0.001	150	7	G-9
RBK8--25XX	5600 – 6500	2500 / 85	3927	61,000	1.86×10^7	44,500	8.28×10^6	1.55 / 3000 (T_j = 25°C)	0.79	0.238	0.0115	0.002	150	10	G-10
RBT8--28XX	5600 – 6500	2850 / 85	4477	61,000	1.86×10^7	44,500	8.28×10^6	1.55 / 3000	0.79	0.238	0.0095	0.002	150	9	G-9
RDK8--40XX	6000 – 6500	4000 / 68	6,283	55,000	1.28×10^7	60,000	1.50×10^7	1.65 / 4000	1.13	0.117×10^{-4}	0.0075	0.001	150	13	G-11

General Purpose Welding Diodes (Refer to device datasheets at www.pwrx.com for test conditions.)

Type	V_{RRM} Volts ($V_{RMS} = V_{RRM} + 100V$)	$I_{F(av)}/T_C$ Amperes/°C (180° sin)	$I_{F(RMS)}$ Amperes (180° sin)	EUROPEAN I_{FSM} Amperes (10ms, $T_{j(max)}$, No V_{RRM} Reapplied)	EUROPEAN I^2t A^2sec (10ms, $T_{j(max)}$, No V_{RRM} Reapplied)	NORTH AMERICAN I_{FSM} Amperes (8.3ms, $T_{j(max)}$, 100% V_{RRM} Reapplied)	NORTH AMERICAN I^2t A^2sec (8.3ms, $T_{j(max)}$, 100% V_{RRM} Reapplied)	V_{FM}/I_{FM} Volts/Amperes ($T_{j(max)@25°C}$)	V_{TO} Volts ($T_{j(max)}$)	R_T mΩ ($T_{j(max)}$)	$R_{th(j-c)}$ °C/W	$R_{th(c-s)}$ °C/W	$T_{j(max)}$ °C	Outline Drawings Number	Outline Drawings Page
R9XSMD0448XX	400	4800 / 84	7540	33,600	5.64×10^6	35,000	$.5.10 \times 10^6$	1.20 / 4000	0.701	0.053	0.009	0.005	175	20	G-13
R9XSMD0463XX	400	6300 / 40	9,896	33,600	5.64×10^6	35,000	5.10×10^6	1.10 / 4000	0.701	0.053	0.009	0.005	175	20	G-13
R9XSMD0475XX	400	7450 / 40	11,702	42,000	8.82×10^6	43,700	7.96×10^6	1.05 / 4000	0.720	0.0308	0.009	0.005	175	21	G-13
RAXMHC0412XX	400	12,000 / 79	18,850	57,300	1.64×10^7	60,000	1.50×10^7	0.95 / 4000	0.977	0.00915	0.005	0.003	175	22	G-14
RAS00412XX	400	12,000 / 68	18,850	57,300	1.64×10^7	60,000	1.50×10^7	1.00 / 4000	0.98	4.91×10^{-3}	0.008	0.004	175	8	G-9

General Purpose Stud Diodes (Refer to device datasheets at www.pwrx.com for test conditions.)

Type	V_{RRM} Volts ($V_{RMS} = V_{RRM} + 100V$)	$I_{F(av)}/T_C$ Amperes/°C (180° sin)	$I_{F(RMS)}$ Amperes (180° sin)	EUROPEAN I_{FSM} Amperes (10ms, $T_{j(max)}$, No V_{RRM} Reapplied)	EUROPEAN I^2t A^2sec (10ms, $T_{j(max)}$, No V_{RRM} Reapplied)	NORTH AMERICAN I_{FSM} Amperes (8.3ms, $T_{j(max)}$, 100% V_{RRM} Reapplied)	NORTH AMERICAN I^2t A^2sec (8.3ms, $T_{j(max)}$, 100% V_{RRM} Reapplied)	V_{FM}/I_{FM} Volts/Amperes ($T_{j(max)}$)	V_{TO} Volts ($T_{j(max)}$)	R_T mΩ ($T_{j(max)}$)	$R_{th(j-c)}$ °C/W	$R_{th(c-s)}$ °C/W	$T_{j(max)}$ °C	Outline Drawings Number	Page
Up to 1600V														
R500--10XXWA, R501--10XXWA	200 – 1600	100 / 163	160	3,450	59,513	2,300	22,000	1.0 / 80	0.80	1.99	0.28	0.20	200	14	G-11
R500--15XXWA, R501--15XXWA	200 – 1600	150 / 147	236	4,500	101,250	3,000	37,500	1.0 / 100	0.85	1.08	0.28	0.20	200	14	G-11
R700--05XXUA, R701--05XXUA	200 – 1600	550 / 125	865	15,000	1.1×10^6	10,000	416,500	0.89 / 1000	0.65	0.25	0.12	0.04	200	17	G-12
R750--05XXUA, R751--05XXUA	200 – 1600	550 / 125	865	15,000	1.1×10^6	10,000	416,500	0.89 / 1000	0.65	0.25	0.12	0.04	200	19	G-13
Up to 2600V														
R600--20XXYA, R601--20XXYA	100 – 2600	200 / 140	315	8,250	340,313	5,500	125,000	1.32 / 500	0.84	0.94	0.18	0.10	150 – 190	15	G-11
R650--20XXYA, R651--20XXYA	100 – 2600	200 / 140	315	8,250	340,313	5,500	125,000	1.32 / 500	0.84	0.94	0.18	0.10	150 – 190	16	G-12
R600--25XXYA, R601--25XXYA	100 – 2600	250 / 130	400	9,000	405,000	6,000	150,000	1.24 / 500	0.88	0.72	0.18	0.10	150 – 190	15	G-11
R650--25XXYA, R651--25XXYA	100 – 2600	250 / 130	400	9,000	405,000	6,000	150,000	1.24 / 500	0.88	0.72	0.18	0.10	150 – 190	16	G-12
R600--30XXYA, R601--30XXYA	100 – 2600	300 / 123	470	9,750	475,313	6,500	175,000	1.17 / 500	0.92	0.53	0.18	0.10	150 – 190	15	G-11
R650--30XXYA, R651--30XXYA	100 – 2600	300 / 123	470	9,750	475,313	6,500	175,000	1.17 / 500	0.92	0.53	0.18	0.10	150 – 190	16	G-12
R700--04XXUA R701--04XXUA	200 – 2600	450 / 100	700	12,750	812,813	8,500	266,000	1.25 / 1000	0.83	0.40	0.12	0.04	200	17	G-12
R750--04XXUA R751--04XXUA	200 – 2600	450 / 100	700	12,750	812,813	8,500	266,000	1.25 / 1000	0.83	0.40	0.12	0.04	200	19	G-13
Up to 4500V														
R700--03XXUA, R701--03XXUA	200 – 4400	300 / 80	470	10,500	551,250	7,000	204,000	1.48 / 1000	0.92	0.55	0.12	0.04	200	17	G-12
R750--03XXUA, R751--03XXUA	200 – 4400	300 / 80	470	10,500	551,250	7,000	204,000	1.48 / 1000	0.92	0.55	0.12	0.04	200	19	G-13
R7F0--03XXUA, R7F1--03XXUA	200 – 4400	300 / 80	470	10,500	551,250	7,000	204,000	1.48 / 1000	0.92	0.55	0.12	0.04	200	18	G-12

Forward Polarity

R500, R600, R650, R700, R7F0, R750

Reverse Polarity

R501, R601, R651, R701, R7F1, R751

Fast Recovery Disc/Hockey Puk Diodes (Refer to device datasheets at www.pwrx.com for test conditions.)

Type	V_{RRM} Volts ($V_{RMS} = V_{RRM} + 100V$)	$I_{F(av)}/T_C$ Amperes/°C (180° sin)	$I_{F(RMS)}$ Amperes (180° sin)	EUROPEAN I_{FSM} Amperes (10ms, $T_{j(max)}$, No V_{RRM} Reapplied)	EUROPEAN I^2t A^2sec (10ms, $T_{j(max)}$, No V_{RRM} Reapplied)	NORTH AMERICAN I_{FSM} Amperes (8.3ms, $T_{j(max)}$, No V_{RRM} Reapplied)	NORTH AMERICAN I^2t A^2sec (8.3ms, $T_{j(max)}$, No V_{RRM} Reapplied)	V_{FM}/I_{FM} Volts/Amperes ($T_{j(max)}$)	V_{TO} Volts ($T_{j(max)}$)	R_T mΩ ($T_{j(max)}$)	$R_{th(j-c)}$ °C/W	$R_{th(c-s)}$ °C/W	$T_{j(max)}$ °C	Outline Drawings Number	Outline Drawings Page
Up to 1600V															
R622--40*SOO	200 – 1600	400 / 70	625	6,750	227,813	4,500	85,000	1.40 / 200	1.23	0.84	0.095	0.025	150	1	G-7
R622--55*SOO	200 – 1600	550 / 70	860	9,000	405,000	6,000	150,000	1.29 / 700	0.97	0.44	0.095	0.025	150	1	G-7
R722--06*SOO	200 – 1600	650 / 70	1000	11,250	632,813	7,500	234,000	1.51 / 400	1.12	0.67	0.055	0.020	150	4	G-8
R722--08*SOO	200 – 1600	800 / 70	1,250	16,500	1.3×10^6	11,000	504,000	1.22 / 400	1.08	0.36	0.055	0.020	150	4	G-8
R7S2--09*SOO	200 – 1600	900 / 70	1,440	11,250	632,813	7,500	234,000	1.55 / 500	1.32	0.44	0.035	0.025	150	3	G-7
R7S2--10*SOO	200 – 1600	1000 / 70	1,550	16,500	1,361,250	11,000	504,000	1.24 / 500	1.05	0.37	0.035	0.025	150	3	G-7
Up to 2600V															
R722--05*SOO	200 – 2600	500 / 70	785	9,750	475,313	6,500	176,000	1.52 / 500	0.99	0.86	0.055	0.020	150	4	G-8
R722--07*SOO	200 – 2600	700 / 70	1100	14,250	1.01×10^6	9,500	376,000	1.0 / 300	0.87	0.57	0.055	0.020	150	4	G-8
R7S2--07*SOO	200 – 2600	700 / 70	1100	9,750	475,313	6,500	176,000	1.42 / 400	1.10	0.72	0.035	0.025	150	3	G-7
R7S2--08*SOO	200 – 2600	800 / 70	1,250	14,250	1.01×10^6	9,500	376,000	1.17 / 500	0.86	0.55	0.035	0.025	150	3	G-7
Up to 3600V															
R9G2--12*SOO	200 – 3600	1200 / 70	1,900	21,000	2.2×10^6	14,000	820,000	1.95 / 1000	1.18	0.62	0.018	0.008	150	5	G-8
R9G2--15*SOO	200 – 3600	1500 / 70	2,350	27,000	3.6×10^6	18,000	1.35×10^6	1.5 / 1000	1.04	0.39	0.018	0.008	150	5	G-8

Fast Recovery Stud Diodes (Refer to device datasheets at www.pwrx.com for test conditions.)

Type	V_{RRM} Volts ($V_{RMS} = V_{RRM} + 100V$)	$I_{F(av)}/T_C$ Amperes/°C (180° sin)	$I_{F(RMS)}$ Amperes (180° sin)	EUROPEAN I_{FSM} Amperes (10ms, $T_{j(max)}$, No V_{RRM} Reapplied)	EUROPEAN I^2t A^2sec (10ms, $T_{j(max)}$, No V_{RRM} Reapplied)	NORTH AMERICAN I_{FSM} Amperes (8.3ms, $T_{j(max)}$, No V_{RRM} Reapplied)	NORTH AMERICAN I^2t A^2sec (8.3ms, $T_{j(max)}$, No V_{RRM} Reapplied)	V_{FM}/I_{FM} Volts/Amperes ($T_{j(max)}$)	V_{TO} Volts ($T_{j(max)}$)	R_T mΩ ($T_{j(max)}$)	$R_{th(j-c)}$ °C/W	$R_{th(c-s)}$ °C/W	$T_{j(max)}$ °C	Outline Drawings Number	Outline Drawings Page
Up to 1600V															
R502--13*SWA, R503--13*SWA	200 – 1400	125 / 70	195	3,750	70,313	2,500	26,000	1.84 / 200	1.17	3.09	0.28	0.12	150	14	G-11
R502--18*SWA, R503--18*SWA	200 – 1400	175 / 70	275	5,250	137,813	3,500	51,000	1.48 / 300	0.85	1.57	0.28	0.12	150	14	G-11
R602--25*SYA, R603--25*SYA	200 – 1600	250 / 70	400	6,750	227,813	4,500	85,000	1.39 / 200	1.20	0.86	0.17	0.10	150	15	G-11
R602--35*SYA, R603--35*SYA	200 – 1600	350 / 70	550	9,000	405,000	6,000	150,000	1.18 / 400	0.95	0.51	0.17	0.10	150	15	G-11

Forward Polarity

R502, R602

Reverse Polarity

R503, R603

1 R620, R622

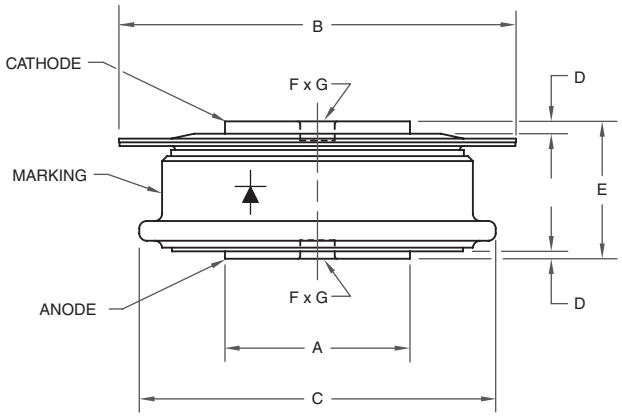

Dim.	Inches	Millimeters
A	0.752 Dia.	19.1 Dia.
B	1.658 Dia.	42.1 Dia.
C	1.461 Dia.	37.1 Dia.
D	0.0197 Min.	0.5 Min.

Dim.	Inches	Millimeters
E	0.567 Max.	14.4 Max.
F	0.142 Dia.	3.6 Dia.
G	0.0787 Deep	2.0 Deep

2 R7S0 (≤1600V)

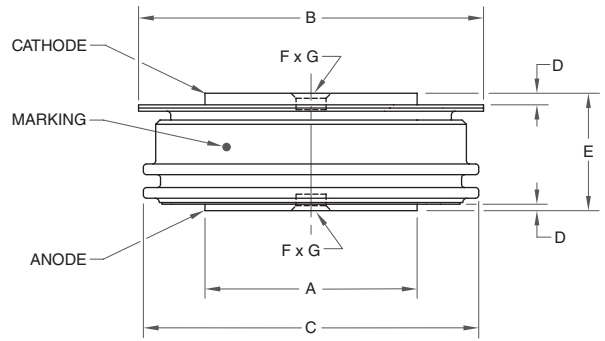

Dim.	Inches	Millimeters
A	0.995 Dia.	25.27 Dia.
B	1.650 Dia.	41.9 Dia.
C	1.585 Dia.	40.26 Dia.
D	0.040 Min.	1.01 Min.

Dim.	Inches	Millimeters
E	0.605 Max.	15.37 Max.
F	0.145 Dia.	3.68 Dia.
G	0.0787 Deep	2.0 Deep

3 R7S0 (≥1800V), R7S2

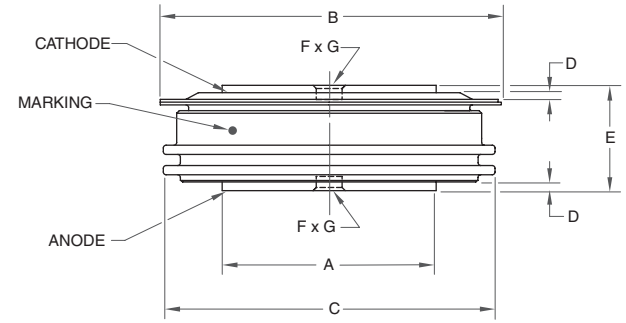

Dim.	Inches	Millimeters
A	1.17 Dia.	29.7 Dia.
B	1.90 Dia.	48.3 Dia.
C	1.85 Dia.	47.0 Dia.
D	0.028 Min.	0.7 Min.

Dim.	Inches	Millimeters
E	0.606 Max.	15.4 Max.
F	0.142 Dia.	3.6 Dia.
G	0.0787 Deep	2.0 Deep

4 R720, R722, R820, R8K8

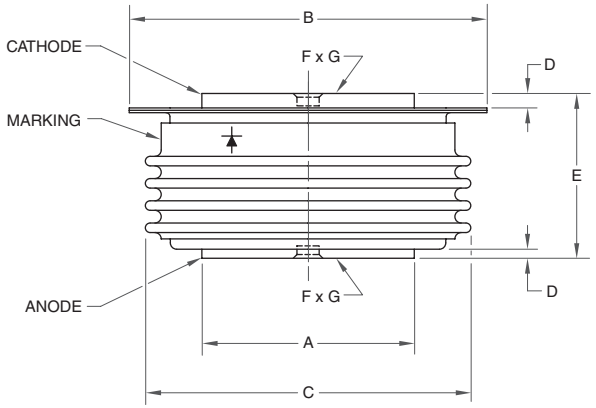

Dim.	Inches	Millimeters
A	1.343 Dia.	34.1 Dia.
B	2.299 Dia.	58.4 Dia.
C	2.091 Dia.	53.1 Dia.
D	0.028 Min.	0.7 Min.

Dim.	Inches	Millimeters
E	1.059 Max.	26.9 Max.
F	0.142 Dia.	3.6 Dia.
G	0.0787 Deep	2.0 Deep

5 R9G0, R9G2

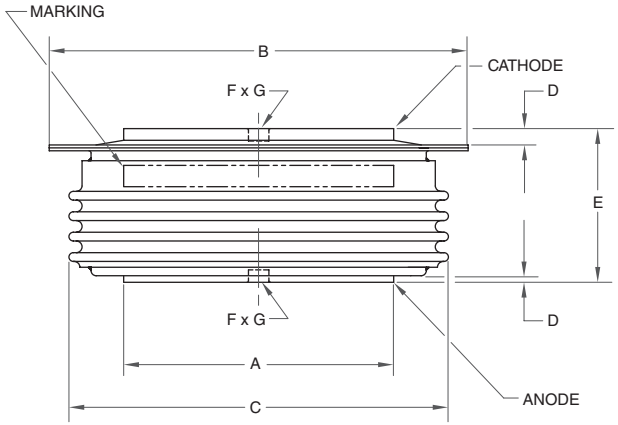

Dim.	Inches	Millimeters
A	1.858 Dia.	47.2 Dia.
B	2.8898 Dia.	73.4 Dia.
C	2.6496 Dia.	67.3 Dia.
D	0.028 Min.	0.7 Min.

Dim.	Inches	Millimeters
E	1.0787 Max.	27.4 Max.
F	0.142 Dia.	3.6 Dia.
G	0.0787 Deep	2.0 Deep

6 R9S0

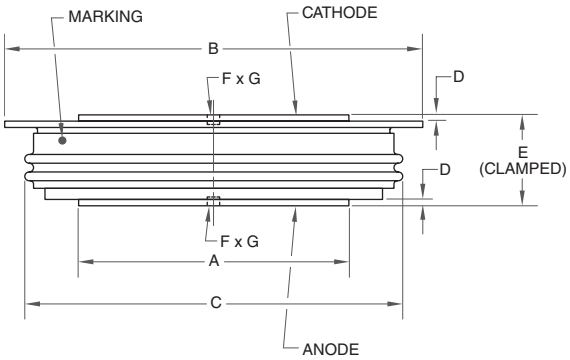

Dim.	Inches	Millimeters
A	1.85 Dia.	47.0 Dia.
B	2.913 Dia.	74.0 Dia.
C	2.638 Dia.	67 Dia.
D	0.028 Min.	0.7 Min.

Dim.	Inches	Millimeters
E	0.650 Max.	16.5 Max.
F	0.142 Dia.	3.6 Dia.
G	0.0787 Deep	2.0 Deep

7 RA20

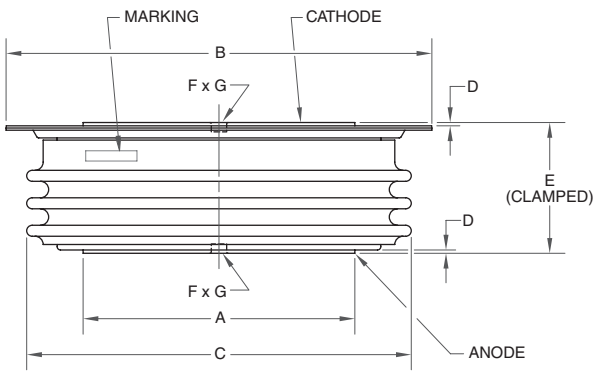

Dim.	Inches	Millimeters
A	2.469 Dia.	62.7 Dia.
B	3.909 Dia.	99.3 Dia.
C	3.543 Dia.	90.0 Dia.
D	0.028 Min.	0.7 Min.

Dim.	Inches	Millimeters
E	1.339 Max.	34.0 Max.
F	0.142 Dia.	3.6 Dia.
G	0.0787 Deep	2.0 Deep

8 RAS8, RAS00412XX

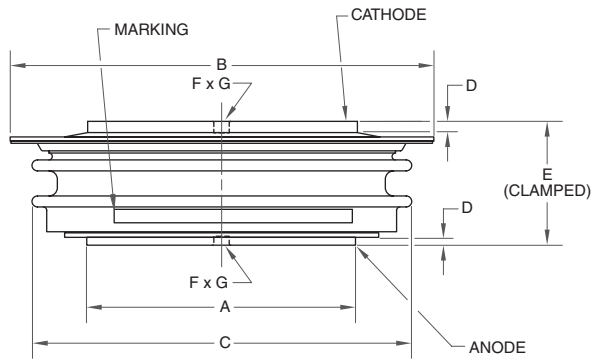

Dim.	Inches	Millimeters
A	2.48 Dia.	63.0 Dia.
B	3.93 Dia.	100.0 Dia.
C	3.543 Dia.	91.0 Dia.
D	0.028 Min.	0.7 Min.

Dim.	Inches	Millimeters
E	1.031 Max.	26.2 Max.
F	0.14 Dia.	3.5 Dia.
G	0.07 Deep	1.8 Deep

9 RBS8, RBT8

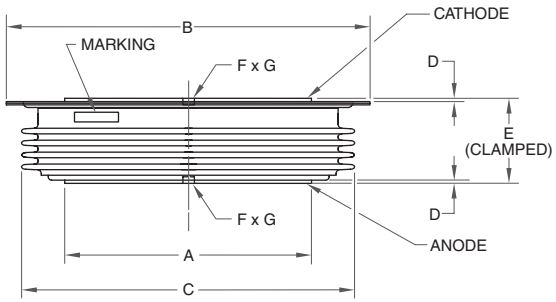

RBS8

Dim.	Inches	Millimeters
A	2.88 Dia.	73.2 Dia.
B	4.36 Dia.	110.7 Dia.
C	3.95 Dia.	100.3 Dia.
D	0.03 Min.	0.76 Min.

Dim.	Inches	Millimeters
E	1.08 Max.	27.4 Max.
F	0.142 Dia.	3.6 Dia.
G	0.0787 Deep	2.0 Deep

RBT8

Dim.	Inches	Millimeters
A	2.88 Dia.	73.2 Dia.
B	4.36 Dia.	110.7 Dia.
C	3.95 Dia.	100.3 Dia.
D	0.03 Min.	0.76 Min.

Dim.	Inches	Millimeters
E	1.04 Max.	26.5 Max.
F	0.142 Dia.	3.6 Dia.
G	0.0787 Deep	2.0 Deep

10 RBK8

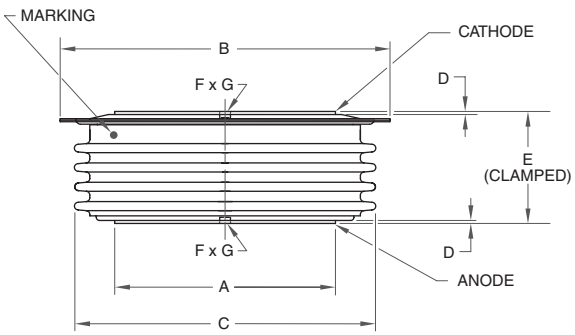

Dim.	Inches	Millimeters
A	2.882 Dia.	73.2 Dia.
B	4.36 Dia.	110.7 Dia.
C	3.961 Dia.	100.6 Dia.
D	0.028 Min.	0.7 Min.

Dim.	Inches	Millimeters
E	1.5 Max.	38.1 Max.
F	0.142 Dia.	3.6 Dia.
G	0.0787 Deep	2.0 Deep

11 RCS8

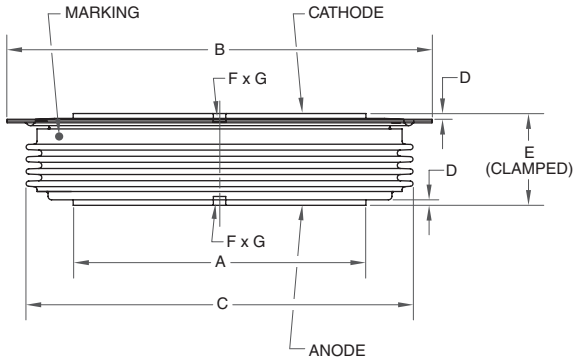

Dim.	Inches	Millimeters
A	3.311 Dia.	84.1 Dia.
B	4.889 Dia.	124.2 Dia.
C	4.370 Dia.	111.0 Dia.
D	0.028 Min.	0.7 Min.

Dim.	Inches	Millimeters
E	1.059 Max.	26.9 Max.
F	0.142 Dia.	3.6 Dia.
G	0.0787 Deep	2.0 Deep

12 RDS8

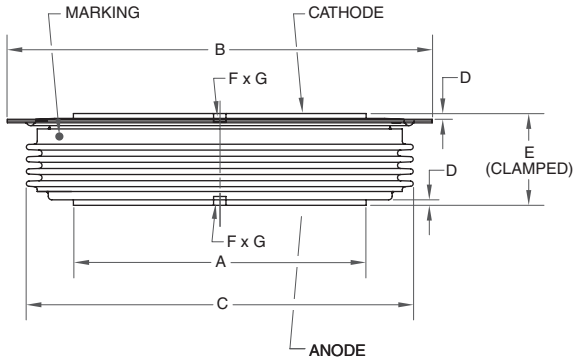

Dim.	Inches	Millimeters
A	3.913 Dia.	99.4 Dia.
B	5.661 Dia.	143.8 Dia.
C	5.181 Dia.	131.6 Dia.
D	0.028 Min.	0.7 Min.

Dim.	Inches	Millimeters
E	1.059 Max.	26.9 Max.
F	0.142 Dia.	3.6 Dia.
G	0.0787 Deep	2.0 Deep

13 RDK8

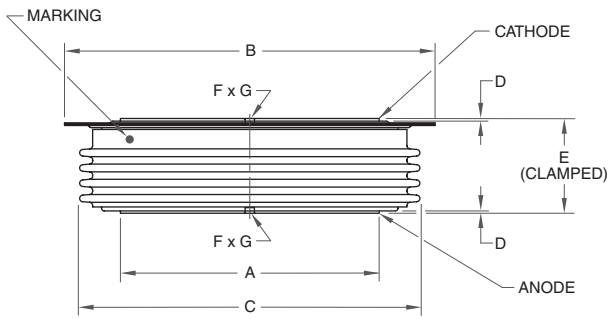

Dim.	Inches	Millimeters
A	3.913 Dia.	99.4 Dia.
B	5.661 Dia.	143.8 Dia.
C	5.181 Dia.	131.6 Dia.
D	0.028 Min.	0.7 Min.

Dim.	Inches	Millimeters
E	1.5 Max.	38.1 Max.
F	0.142 Dia.	3.6 Dia.
G	0.0787 Deep	2.0 Deep

14 R500, R501, R502, R503

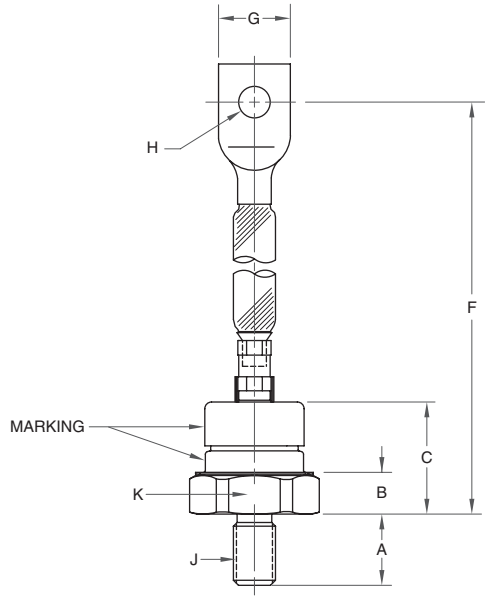

Dim.	Inches	Millimeters
A	0.626	15.9
B	0.358	9.1
C	0.980	24.9
F	4.606 Max.	117.0 Max.
G	0.654 Max.	16.6 Max.

Dim.	Inches	Millimeters
H	0.2795 Dia.	7.1 Dia.
J	0.375-24 UNF-2A Thread	
K	1.059 Max. (Across Flats)	26.9 Max.

Forward Polarity

R500, R502

Reverse Polarity

R501, R503

15 R600, R601, R602, R603

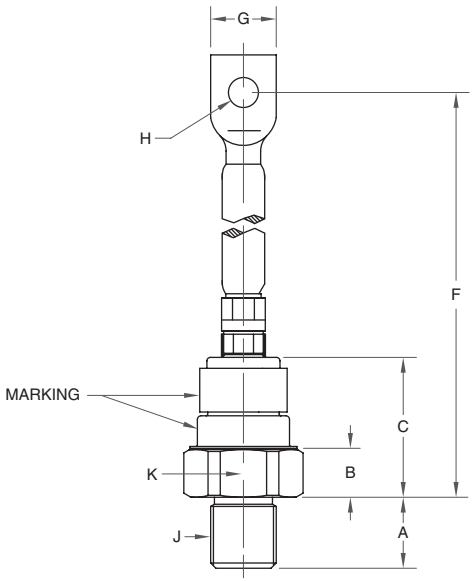

Dim.	Inches	Millimeters
A	0.811	20.6
B	0.559	14.2
C	1.598	40.6
F	5.563 Max.	141.3 Max.
G	0.752 Max.	19.1 Max.

Dim.	Inches	Millimeters
H	0.343 Dia.	8.7 Dia.
J	0.750-16 UNF-2A Thread	
K	1.244 Max. (Across Flats)	31.6 Max.

Forward Polarity

R600, R602

Reverse Polarity

R601, R603

16 R650

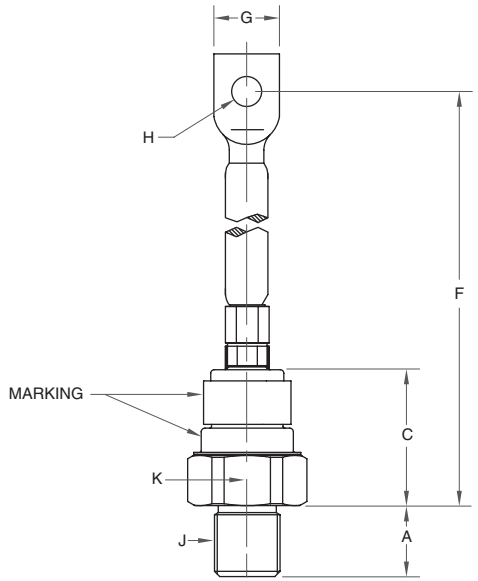

Dim.	Inches	Millimeters
A	0.822	20.88
C	1.56	39.68
F	5.56 Max.	141.228 Max.
G	19.05 Max.	0.75 Max.

Dim.	Inches	Millimeters
H	0.343 Dia.	8.72 Dia.
J	M20 x 1.5	
K	1.245 Max.	31.776 Max.
	(Across Flats)	

Forward Polarity

R650

Reverse Polarity

R651

17 R700, R701

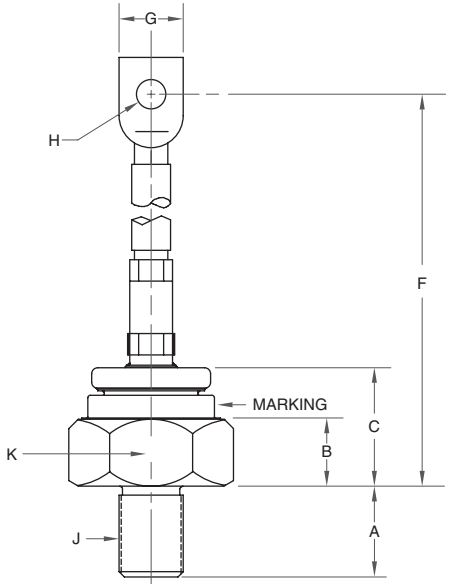

Dim.	Inches	Millimeters
A	1.059	26.9
B	0.7795	19.8
C	1.409	35.8
F	9.784 Max.	248.5 Max.
G	0.752 Max.	19.1 Max.

Dim.	Inches	Millimeters
H	0.343 Dia.	8.7 Dia.
J	0.750-16 UNF-2A Thread	
K	1.752 Max.	44.5 Max.
	(Across Flats)	

Forward Polarity

R700

Reverse Polarity

R701

18 R7F0, R7F1

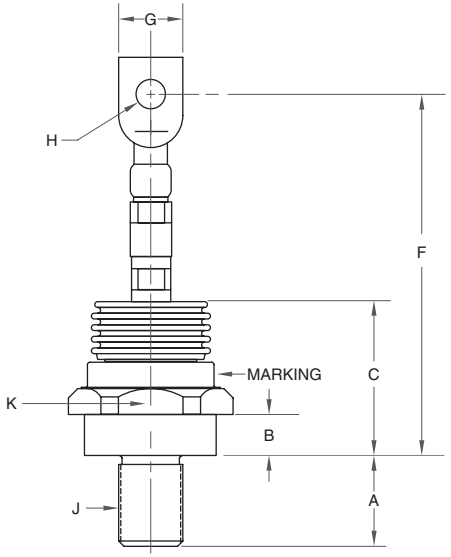

Dim.	Inches	Millimeters
A	1.062	26.97
B	0.47	11.94
C	1.81	45.97
F	4.25 Max.	107.95 Max.
G	0.75 Max.	19.05 Max.

Dim.	Inches	Millimeters
H	0.343 Dia.	8.73 Dia.
J	0.750-16 UNF-2A Thread	
K	1.750 Max.	44.45 Max.
	(Across Flats)	

Forward Polarity

R7F0

Reverse Polarity

R7F1

19 R750

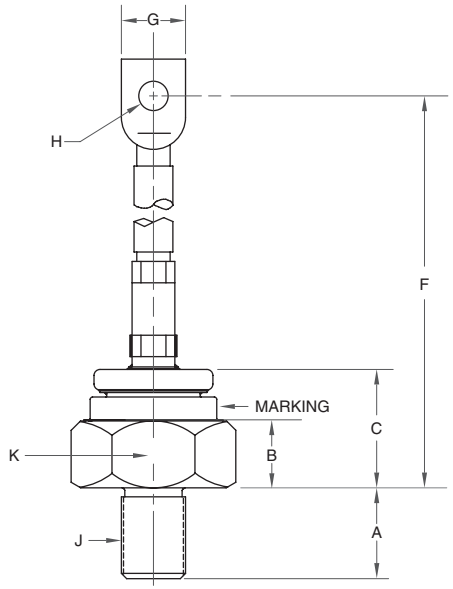

Dim.	Inches	Millimeters
A	1.06	20.9
B	0.75	19.0
C	1.46	37.0
F	9.78 Max.	248.4 Max.
G	0.740 Max.	21.5 Max.

Dim.	Inches	Millimeters
H	0.355 Dia.	9.0 Dia.
J	M24 x 1.5	
K	1.755 Max. (Across Flats)	44.6 Max.

20 R9XSMD0448XX, R9XSMD0463XX

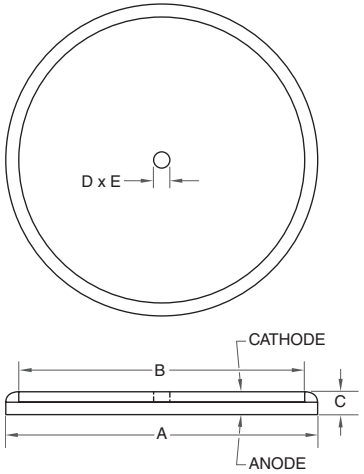

Dim.	Inches	Millimeters
A	1.97 Dia.	50.0 Dia.
B	1.7 Dia.	43.2 Dia.
C	0.20	5.0

Dim.	Inches	Millimeters
D	0.142 Dia.	3.6 Dia.
E	0.047 Deep	1.2 Deep

21 R9XSMD0475XX

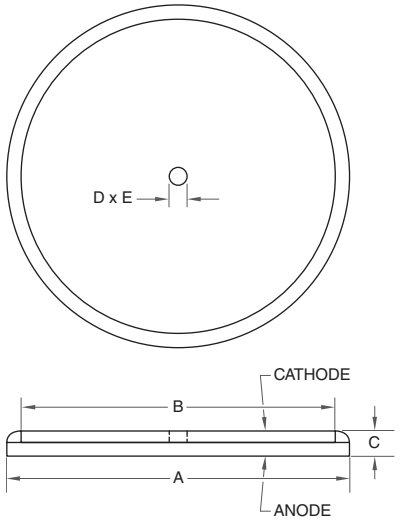

Dim.	Inches	Millimeters
A	2.20 Dia.	56.0 Dia.
B	1.937 Dia.	49.2 Dia.
C	0.2	5.0

Dim.	Inches	Millimeters
D	0.142 Dia.	3.6 Dia.
E	0.047 Deep	1.2 Deep

Forward Polarity

R750

Reverse Polarity

R751

22 RAXMHC0412XX

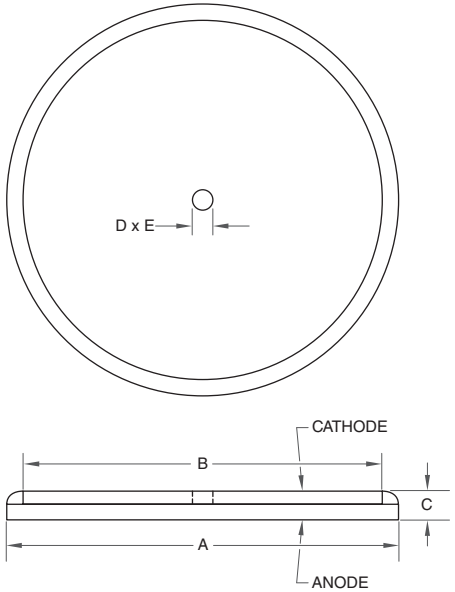

Dim.	Inches	Millimeters
A	2.56 Dia.	65.0 Dia.
B	2.28 Dia.	58.0 Dia.
C	0.20	5.0

Dim.	Inches	Millimeters
D	0.142 Dia.	3.6 Dia.
E	0.047 Deep	1.2 Deep

THYRISTOR & DIODE MODULES

POW-R-BLOK™ Modules
Applications Include:
- Battery Chargers
- Induction Heating/Melting
- Medical Equipment
- Motor Controls
- Power Supplies
- UPS
- Welding

POW-R-BRIK™
Applications Include:
- AC Motor Starters
- DC Motor Controls
- Mining Power Centers
- Resistance Welding Controls
- Transportation

Circuit Configurations:
- Single
- Dual
- Split Dual
- Common Anode
- Common Cathode
- AC Switch

TABLE OF CONTENTS

Numbering System H-2
Optional Cathode & Gate Lead Kits for POW-R-BLOK™ Modules H-3
Optional Hardware for ND, NS, LD & LS POW-R-BLOK™ Modules H-3
Diode Modules H-4
Thyristor Modules H-6
Thyristor / Diode Modules H-9
Thyristor / Diodes (POW-R-BRIKs™) H-10
Outline Drawings H-11

POW-R-BLOK™ Modules
VOLTAGE: 600V TO 5000V
CURRENT: 90A TO 2500A

POW-R-BRIK™ Modules
VOLTAGE: 600V TO 5000V
CURRENT: 300A TO 1585A

Numbering System

Thyristor (SCR) and Diode Modules

CD431290B is a 90 Ampere, 1200 Volt, Dual Switch Module

CD 4 3 12 90 B

(1) (2) (3) (4) (5) (6)

(1) Type Number:

CD, ND, LD, PD = Dual Switches
CS, LS, PS = Single Switches
PA = AC Switch
CC = Common Cathode
CN, LN = Common Anode

(2) Package Style

(3) Configuration:
1 = Diode
2 = SCR / Diode
3 = SCR
7 = Diode / SCR

(4) Voltage Rating (x 100):

08 = 800V
12 = 1200V
16 = 1600V
20 = 2000V
24 = 2400V
36 = 3600V
40 = 4000V
50 = 5000V

(5) Current Rating:

Device	Current
CD4	A2 = 25A
CS4	40 = 40A
CC4	50 = 50A
CN4	60 = 60A
	90 = 90A
	99 = 100A
CD6	
CS6	x 10
ND	Example:
LD	25 = 250A
LS	
PD	x 100
PA	Example:
	07 = 700A
PS	14 = 1400A
PS	15 = 1500A
PS	20 = 2000A
PS	25 = 2500A

(6) Sufix Identifier:
B, C or D

QRD6516001 is a 160 Ampere, 6500 Volt, Dual Switch Module

Q R D 65 16 001

(1) (2) (3) (4) (5) (6)

(1) Product Line

(2) Type Number:
R = Rectifier

(3) Package Style:
D = Dual Switch

(4) Voltage Rating (x 100)

(5) Current (x 10)

(6) Serial Designation:
001 = Special Designation

POW-R-BRIKs™

P3Z7ACT700W16 is a 1600 Volt, Dual SCR Module with Standard Thermistor

P3 Z 7 A CT7 00 W16

(1) (2) (3) (4) (5) (6) (7)

(1) Type Number:

P1 = Dual Diode
P2 = SCR / Diode
P3 = Dual SCR
P7 = Diode / SCR

(2), (3), (4) Package Style
(3) Indicates Size of the Block & Elements

(5) Element Code:
Refer to Product Datasheet for the Element Codes to Reference the Corresponding Disc Device for Additional Specifications

(6) Special Features:
00 = Module Includes Standard Thermistor
XT = No Thermistor
All Other Codes Denote Unique Customer Specifications

(7) Voltage Rating:
V04 = 400V
V08 = 800V
W12 = 1200V
W16 = 1600V

Optional Cathode & Gate Lead Kits for POW-R-BLOK™ Modules

Type	Description	Lead Kit	Outline Drawings Number	Outline Drawings Page
CD42, CD47 (Half Control)	One red & one yellow lead per module	MR	14	H-15
CD43 (Full Control)	Two red & two yellow leads per module	MQ	14	H-15
CD63, LD43, ND43, PD43(Full Control)	Lead Set 1 & Lead Set 2 (one each/module)	NK	15	H-16
CD62, LD42, LS43, ND42(Half Control), PD47	Lead Set 1 (one/module)	NL	15	H-16
CD67, LD47, ND47, PD42, PS43 (Half Control)	Lead Set 2 (one/module)	NM	15	H-16

Optional Hardware for ND, NS, LD and LS POW-R-BLOK™ Modules

Type	Hardware Kit	Description
ND	87	Three M8 x 1.25 screws (16mm in length) with captive lock washer and flat washer
NS	86	Two M8 x 1.25 screws (16mm in length) with captive lock washer and flat washer
LD	50	Three M10 x 1.5 screws (20mm in length) and three 10mm lock washers
LS	49	Two M10 x 1.5 screws (20mm in length) and two 10mm lock washers

Diode Modules (Refer to device datasheets at www.pwrx. com for test conditions.)

CS61--16C

LS41--60,
LS81--45

NS412426

PS41

Type	V_{DRM} / V_{RRM} Volts (V_{RSM} = V_{RRM} + 100V)	$I_{F(av)}/T_C$ Amperes/°C (180° sin)	$I_{F(RMS)}$ Amperes (180° sin)	EUROPEAN I_{FSM} Amperes (10ms, $T_{j(max)}$, No V_{RRM} Reapplied)	EUROPEAN i^2t A^2 sec (10ms, $T_{j(max)}$, No V_{RRM} Reapplied)	NORTH AMERICAN I_{FSM} Amperes (8.3ms, $T_{j(max)}$, 100% V_{RRM} Reapplied)	NORTH AMERICAN i^2t A^2 sec (8.3ms, $T_{j(max)}$, 100% V_{RRM} Reapplied)	V_{FM}/I_{FM} Volts/Amperes ($T_{j(max)}$)	V_{TO} Volts ($T_{j(max)}$)	R_T mΩ ($T_{j(max)}$)	$R_{th(j-c)}$ °C/W	$R_{th(c-s)}$ °C/W	$T_{j(max)}$ °C	Outline Drawings Number	Page
Single Diode Modules														
CS61--16C	800 – 1800	160 / 99	250	6,600	217,800	4,822	96,880	1.56 / 480 (25°C)	0.80	1.35	0.23	0.08	150	10	H-14
CS61--16C	2000 – 2500	160 / 95	250	6,600	217,800	4,822	96,880	1.66 / 480 (25°C)	0.80	1.45	0.23	0.08	150	10	H-14
CS61--16C	2600 – 3600	160 / 90	250	5,720	163,590	4,179	72,760	1.90 / 480 (25°C)	0.90	1.35	0.23	0.08	150	10	H-14
♦LS81--45	3200 – 4000	450 / 107	710	15,050	1.13×10^6	11,000	504,000	1.90 / 1800 (150°C)	0.85	0.55	0.065	0.02	150	3	H-11
♦LS41--60	800 – 2400	600 / 106	950	31,500	4.9×10^6	21,000	1.8×10^6	1.16 / 1500	0.747	0.243	0.065	0.02	150	3	H-11
♦NS412426	800 – 2000	260 / 112	408	12,000	720,000	8,000	266,667	1.35 / 1500	0.764	0.360	0.07	0.03	150	5	H-12
PS415014	4500 – 5000	1400 / 91	2,200	32,700	7.19×10^6	24,000	2.39×10^6	1.30 / 3000	0.71	0.17	0.032	0.009	150	4	H-12
PS41--20	3600 – 4000	2000 / 99	3,140	60,690	18.4×10^6	47,600	9.4×10^6	1.2 / 3000 (150°C)	0.745	0.064	0.024	0.009	150	4	H-12
PS41--25	800 – 2400	2500 / 90	3,925	72,600	26.3×10^6	53,000	11.7×10^6	1.10 / 3000 (25°C)	0.681	0.051	0.024	0.009	150	4	H-12

♦For Optional Hardware go to Page H-3.

Single Diode Modules

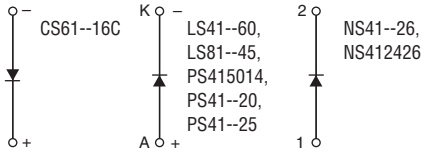

Diode Modules (Refer to device datasheets at www.pwrx. com for test conditions.)

CD41--99C, CD411699D

CD61--16C, CD614020C

ND41

LD41, LD81

PD41

QRD4518001, QRD6516001

Type	V_{DRM} / V_{RRM} Volts (V_{RSM} = V_{RRM} + 100V)	$I_{F(av)}/T_C$ Amperes/°C (180° sin)	$I_{F(RMS)}$ Amperes (180° sin)	EUROPEAN I_{FSM} Amperes (10ms, $T_{j(max)}$, No V_{RRM} Reapplied)	EUROPEAN i^2t A^2 sec (10ms, $T_{j(max)}$, No V_{RRM} Reapplied)	NORTH AMERICAN I_{FSM} Amperes (8.3ms, $T_{j(max)}$, 100% V_{RRM} Reapplied)	NORTH AMERICAN i^2t A^2 sec (8.3ms, $T_{j(max)}$, 100% V_{RRM} Reapplied)	V_{FM}/I_{FM} Volts/Amperes ($T_{j(max)}$)	V_{TO} Volts ($T_{j(max)}$)	R_T mΩ ($T_{j(max)}$)	$R_{th(j-c)}$ °C/W	$R_{th(c-s)}$ °C/W	$T_{j(max)}$ °C	Outline Drawings Number	Page
Dual Diode Modules														
CD41--99C	800 – 1800	100 / 104	157	2,860	40,890	2,089	18,190	1.45 / 330 (25°C)	0.80	1.74	0.35	0.15	150	8	H-13
CD41--99C	2000 – 2500	100 / 101	157	2,860	40,890	2,089	18,190	1.65 / 330 (25°C)	0.85	1.88	0.35	0.15	150	8	H-13
CD411699D	1600	100 / 106	157	2,860	40,890	2,089	18,190	1.35 / 300 (25°C)	0.85	1.30	0.35	0.15	150	8	H-13
CD61--16C	800 – 1800	160 / 99	250	6,600	217,800	4,822	96,880	1.56 / 480 (25°C)	0.80	1.35	0.23	0.08	150	10	H-14
CD61--16C	2000 – 2500	160 / 95	250	6,600	217,800	4,822	96,880	1.66 / 480 (25°C)	0.80	1.45	0.23	0.08	150	10	H-14
CD61--16C	2600 – 3600	160 / 90	250	5,720	163,590	4,179	72,760	1.90 / 480 (25°C)	0.90	1.35	0.23	0.08	150	10	H-14
CD61--20C	3600 – 4000	200 / 100	314	7,500	281,000	—	—	1.69 / 440 (25°C)	0.95	1.40	0.5	0.04	150	10	H-14
QRD4518001	4500	180 / 95	282	5,215	151,000	3,860	140,000	1.35 / 180	0.27	5.216	0.099	0.018	150	16	H-16
QRD6516001	6500	160 / 100	251	TBD	TBD	TBD	TBD	1.25 / 160 (Typ.)	0.776	8.081	TBD	TBD	150	16	H-16
♦ND41--25	2600 – 3400	250 / 101	392	7,125	254,000	5,000	104,000	1.80 / 1500	1.095	0.48	0.07	0.14	150	5	H-12
♦ND41--26	800 – 2600	260 / 112	408	12,000	720,000	8,000	266,667	1.35 / 1500	0.764	0.360	0.07	0.03	150	5	H-12
♦ND41--32	800 – 2000	320 / 101	502	12,000	720,000	8,000	266,667	1.35 / 1500	0.764	0.360	0.07	0.03	150	5	H-12
♦ND41--35	800 – 1800	350 / 102	550	11,000	605,000	8,450	297,510	1.15 / 1500	0.654	0.320	0.07	0.03	150	5	H-12
♦LD81--45	3200 – 4000	450 / 107	710	15,050	1.13×10^6	11,000	504,000	1.90 / 1800	0.85	0.55	0.0325	0.065	150	6	H-12
♦LD41--60	800 – 2600	600 / 106	950	31,500	4.9×10^6	21,000	1.8×10^6	1.16 / 1500	0.747	0.243	0.0325	0.01	150	6	H-12
PD41--10	3600 – 4000	1000 / 87	1570	35,700	—	28,000	3.6×10^6	1.35 / 3000	0.741	0.132	0.029	0.009	150	4	H-12
PD41--11	800 – 2400	1100 / 87	1725	40,350	8.1×10^6	29,500	3.26×10^6	1.00 / 3000	0.869	0.237	0.029	0.009	150	4	H-12

♦For Optional Hardware go to Page H-3.

Dual Diode Modules

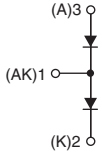

CD41--99C, CD41--99D, CD61--16C, CD614020C, ND41--25, ND41--26, ND41--32, ND41--35, LD41--60, LD81--45, PD41--10, PD41--11

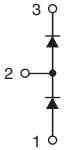

QRD4518001, QRD6516001

Thyristor Modules

(Refer to device datasheets at www.pwrx. com for test conditions.)

LS43--24,
LS43--43,
LS43--50

PS43--15

Type	V_{DRM} / V_{RRM} Volts (V_{RSM} = V_{RRM} + 100V)	$I_{T(av)}/T_C$ Amperes/°C (180° sin)	$I_{T(RMS)}$ Amperes (180° sin)	EUROPEAN I_{TSM} Amperes (10ms, $T_{j(max)}$, No V_{RRM} Reapplied)	EUROPEAN i^2t A^2 sec (10ms, $T_{j(max)}$, No V_{RRM} Reapplied)	NORTH AMERICAN I_{TSM} Amperes (8.3ms, $T_{j(max)}$, 100% V_{RRM} Reapplied)	NORTH AMERICAN i^2t A^2 sec (8.3ms, $T_{j(max)}$, 100% V_{RRM} Reapplied)	V_{TM}/I_{TM} Volts/Amperes ($T_{j(max)}$)	V_{TO} Volts ($T_{j(max)}$)	R_T mΩ ($T_{j(max)}$)	di/dt Amperes/μsec (Non-Repetitive)	dV/dt Volts/μsec	$R_{th(j-c)}$ °C/W	$R_{th(c-s)}$ °C/W	$T_{j(max)}$ °C	Outline Drawings Number	Outline Drawings Page
Single Thyristor Modules																	
♦●LS43--24	3600 – 4000	240 / 74	377	7,525	236,000	5,500	126,000	3.5 / 1000 (25°C)	1.563	2.141	TBD	1000	0.065	0.02	125	3	H-11
♦●LS43--43	1800 – 2200	430 / 80	800	12,000	0.72×10^6	12,000	0.82×10^6	1.77 / 1500	0.88	0.66	200	1000	0.065	0.02	130	3	H-11
♦●LS43--50	600 – 1600	500 / 86	900	25,500	3.25×10^6	17,000	1.20×10^6	1.29 / 1500	0.81	0.32	200	1000	0.065	0.02	130	3	H-11
●PS43--15	600 – 1800	1500 / 86	2355	93,000	43.2×10^6	68,000	19.3×10^6	1.02 / 3000	0.691	0.102	400	200	0.024	0.009	125	4	H-12
●PS43--15	2000 – 2400	1500 / 76	2355	74,640	27.8×10^6	54,570	12.4×10^6	1.50 / 3000 (25°C)	0.849	0.130	400	300	0.024	0.009	125	4	H-12

♦For Optional Hardware go to Page H-3.

●For Optional Cathode & Gate Lead Kits, go to page H-3.

Single Thyristor Modules

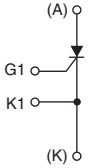

LS43--24,
LS43--43,
LS43--50,
PS43--15

Thyristor Modules (Refer to device datasheets at www.pwrx. com for test conditions.)

CD43--90B

CD43--90C,
CD43--99C

CD63--15B

CD63--15C

LD43--43,
LD43--50,
LD431850,
LD83--24

ND43--21,
ND43--25,
ND43--33

PD43--06,
PD43--07

Type	V_{DRM} / V_{RRM} Volts (V_{RSM} = V_{RRM} + 100V)	$I_{T(av)}/T_C$ Amperes/°C (180° sin)	$I_{T(RMS)}$ Amperes (180° sin)	EUROPEAN I_{TSM} Amperes (10ms, $T_{j(max)}$, No V_{RRM} Reapplied)	EUROPEAN i^2t A^2 sec (10ms, $T_{j(max)}$, No V_{RRM} Reapplied)	NORTH AMERICAN I_{TSM} Amperes (8.3ms, $T_{j(max)}$, 100% V_{RRM} Reapplied)	NORTH AMERICAN i^2t A^2 sec (8.3ms, $T_{j(max)}$, 100% V_{RRM} Reapplied)	V_{TM}/I_{TM} Volts/Amperes ($T_{j(max)}$)	V_{TO} Volts ($T_{j(max)}$)	R_T mΩ ($T_{j(max)}$)	di/dt Amperes/μsec (Non-Repetitive)	dV/dt Volts/μsec	$R_{th(j-c)}$ °C/W	$R_{th(c-s)}$ °C/W	$T_{j(max)}$ °C	Outline Drawings Number	Page
Dual Thyristor Modules																	
●CD43--90B	800 – 1800	90 / 87	140	1,785	15,910	1,570	10,270	1.10 / 100	0.80	2.40	150	500	0.135	0.1	125	1	H-11
●CD43--90C	800 – 1800	90 / 85	141	2,200	24,200	1,600	10,760	1.70 / 270 (25°C)	0.80	3.01	TBD	800	0.28	0.15	125	9	H-14
●CD43--99C	1600 – 1800	100 / 88	157	2,640	34,800	1,930	15,500	1.83 / 270 (25°C)	0.80	3.01	TBD	800	0.25	0.15	125	9	H-14
●CD63--15B	800 – 1800	160 / 85	250	4,870	119,000	4,300	76,700	0.99 / 100	0.80	1.67	300	1000	0.08	0.05	125	2	H-11
●CD63--15C	800 – 1800	150 / 86	235	5,940	176,415	4,340	78,470	1.70 / 480 (25°C)	0.80	1.69	TBD	800	0.17	0.08	125	11	H-14
●CD63--15C	2000 – 2500	150 / 83	235	4,950	122,510	3,615	54,490	2.20 / 480 (25°C)	1.10	1.96	TBD	800	0.17	0.08	125	11	H-14
♦●ND43--21	600 – 2000	210 / 92	330	13,200	871,200	8,800	320,000	1.30 / 625	0.813	0.810	800	500	0.07	0.03	130	5	H-12
♦●LD83--24	3600 – 4000	240 / 74	377	7,525	236,000	5,500	126,000	3.5 / 1000 (25°C)	1.563	2.141	TBD	1000	0.0325	0.065	125	6	H-12
♦●ND43--25	600 – 1600	250 / 89	393	13,200	871,200	8,800	322,000	1.20 / 625	0.819	0.589	800	500	0.07	0.03	130	5	H-12
♦●ND43--25	1800 – 2000	250 / 84	393	13,200	871,200	8,800	322,000	1.36 / 625	0.877	0.731	800	500	0.07	0.03	130	5	H-12
♦●ND43--33	800 – 1600	330 / 71	520	11,850	702,000	8,800	322,667	1.3 / 625 (25°C)	0.819	0.59	800	500	0.07	0.03	130	5	H-12
♦●LD43--43	1800 – 2200	430 / 80	800	12,000	0.72×10^6	12,000	0.82×10^6	1.77 / 1500	0.88	0.66	200	1000	0.0325	0.01	130	6	H-12
♦●LD43--50	600 – 1600	500 / 86	900	25,500	3.25×10^6	17,000	1.20×10^6	1.29 / 1500	0.81	0.32	200	1000	0.0325	0.01	130	6	H-12
♦●LD431850	1800	500 / 84	900	25,500	3.25×10^6	17,000	1.20×10^6	1.4 / 1500	0.916	0.280	200	1000	0.0325	0.01	130	6	H-12
●PD43--06	2000 - 2400	600 / 81	942	40,350	8.14×10^6	29,500	3.63×10^6	1.60 / 3000	0.869	0.237	400	200	0.029	0.009	125	4	H-12
●PD43--07	600 - 1800	700 / 82	1100	54,750	14.9×10^6	40,000	6.60×10^6	1.30 / 3000	0.703	0.184	400	200	0.029	0.009	125	4	H-12

♦For Optional Hardware go to Page H-3.

●For Optional Cathode & Gate Lead Kits, go to page H-3.

Dual Thyristor Modules and AC Switches

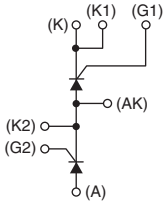

CD43--90B, CD43--90C, CD--99C,
CD63--15B, CD63--15C,
LD43--43, LD43--50, LD431850, LD83--24,
ND43--21, ND43--25, ND43--33,
PD43--06, PD43--07

Thyristor Modules

(Refer to device datasheets at www.pwrx. com for test conditions.)

PA43--06,
PA43--07

Type	V_{DRM} / V_{RRM} Volts (V_{RSM} = V_{RRM} + 100V)	$I_{T(av)}/T_C$ Amperes/°C (180° sin)	$I_{T(RMS)}$ Amperes (180° sin)	EUROPEAN I_{TSM} Amperes (10ms, $T_{j(max)}$, No V_{RRM} Reapplied)	EUROPEAN i^2t A^2 sec (10ms, $T_{j(max)}$, No V_{RRM} Reapplied)	NORTH AMERICAN I_{TSM} Amperes (8.3ms, $T_{j(max)}$, 100% V_{RRM} Reapplied)	NORTH AMERICAN i^2t A^2 sec (8.3ms, $T_{j(max)}$, 100% V_{RRM} Reapplied)	V_{FM}/I_{FM} Volts/Amperes (T_j = 25°C)	V_{TO} Volts ($T_{j(max)}$)	R_T mΩ ($T_{j(max)}$)	di/dt Amperes/μsec (Non-Repetitive)	dV/dt Volts/μsec	$R_{th(j-c)}$ °C/W	$R_{th(c-s)}$ °C/W	$T_{j(max)}$ °C	Outline Drawings Number	Outline Drawings Page
AC Switches																	
●PA43--06	1300 - 2400	600 / 81	1330	40,350	8.14×10^6	29,500	3.63×10^6	1.75 / 3000	0.869	0.237	400	600	0.029	0.009	125	4	H-12
●PA43--07	600 - 1800	700 / 82	1550	54,750	14.9×10^6	40,000	6.60×10^6	1.30 / 3000	1.010	0.117	400	600	0.029	0.009	125	4	H-12

●For Optional Cathode & Gate Lead Kits,
go to page H-3.

AC Switches

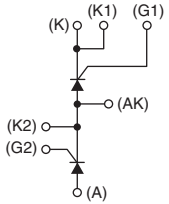

PA43--06, PA43--07

Thyristor / Diode Modules (Refer to device datasheets at www.pwrx. com for test conditions.)

CD42--B, CD47--B

CD62--15B

CD62--15C, CD67--15C

LD42, LD47, LD82--24

ND42, ND47

PD42, PD47

Type	V_{DRM} / V_{RRM} Volts (V_{RSM} = V_{RRM} + 100V)	$I_{T(av)}/T_C$ Amperes/°C (180° sin)	$I_{T(RMS)}$ Amperes (180° sin)	EUROPEAN I_{TSM} Amperes (10ms, $T_{j(max)}$, No V_{RRM} Reapplied)	EUROPEAN i^2t A^2 sec (10ms, $T_{j(max)}$, No V_{RRM} Reapplied)	NORTH AMERICAN I_{TSM} Amperes (8.3ms, $T_{j(max)}$, 100% V_{RRM} Reapplied)	NORTH AMERICAN i^2t A^2 sec (8.3ms, $T_{j(max)}$, 100% V_{RRM} Reapplied)	V_{TM}/I_{TM} Volts/Amperes ($T_{j(max)}$)	V_{TO} Volts ($T_{j(max)}$)	R_T mΩ ($T_{j(max)}$)	di/dt Amperes/μsec (Non-Repetitive)	dV/dt Volts/μsec	$R_{th(j-c)}$ °C/W	$R_{th(c-s)}$ °C/W	$T_{j(max)}$ °C	Outline Drawings Number	Page
●CD42--90B, CD47--90B	800 – 1800	90 / 87	140	1,785	15,910	1,570	10,270	1.10 / 100	0.80	2.40	150	500	0.135	0.1	125	1	H-11
●CD42--90C, CD47--90C	800 – 1800	90 / 85	141	2,200	24,200	1,600	10,760	1.70 / 270 (25°C)	0.80	3.01	TBD	800	0.28	0.15	125	12	H-15
●CD62--15B	800 – 1800	160 / 85	250	4,870	119,000	4,300	76,700	0.99 / 100 (25°C)	0.80	1.67	300	1000	0.08	0.05	125	2	H-11
●CD62--15C, CD67--15C	800 – 1800	150 / 86	235	5,940	176,415	4,340	78,470	1.70 / 480 (25°C)	0.80	1.69	TBD	800	0.17	0.08	125	13	H-15
●CD62--15C, CD67--15C	2000 – 2500	150 / 83	235	4,950	122,510	3,615	54,490	2.20 / 480 (25°C)	1.10	1.96	TBD	800	0.17	0.08	125	13	H-15
♦●ND42--21, ND47--21	600 – 2000	210 / 92	330	13,200	871,200	8,800	320,000	1.30 / 625	0.813	0.810	800	500	0.07	0.03	130	5	H-12
♦●ND42--25, ND47--25	600 – 1600	250 / 89	393	13,200	871,200	8,800	322,000	1.20 / 625	0.819	0.589	800	500	0.07	0.03	130	5	H-12
♦●ND421825, ND471825	1800	250 / 84	393	13,200	871,200	8,800	322,000	1.36 / 625	0.877	0.731	800	500	0.07	0.03	130	5	H-12
♦●LD42--43, LD47--43	1800 – 2200	510 / 70	800	12,000	0.72×10^6	12,000	0.82×10^6	1.77 / 1500	0.88	0.66	200	1000	0.0325	0.01	130	6	H-12
♦●LD42--50, LD47--50	600 – 1600	500 / 86	900	25,500	3.2×10^6	17,000	1.20×10^6	1.29 / 1500	0.81	0.32	200	1000	0.0325	0.01	130	6	H-12
♦●LD421850, LD471850	1800	500 / 84	900	25,500	3.2×10^6	17,000	1.20×10^6	1.36 / 1500	0.916	0.280	200	1000	0.0325	0.01	130	6	H-12
♦●LD82--24	3600 – 4000	240 / 74	377	7,525	236,000	5,500	126,000	3.5 / 1000 (25°C)	1,563	2.141	TBD	1000	0.0325	0.065	125	6	H-12
●PD42--07, PD47--07	600 – 1800	700 / 82	1100	60,000	18.0×10^6	40,000	6.60×10^6	1.30 / 3000	0.703	0.184	400	200	0.029	0.009	125	4	H-12
●PD42--06, PD47--06	2000 – 2400	600 / 81	942	44,250	9.7×10^6	29,500	3.63×10^6	1.60 / 3000	0.869	0.237	400	200	0.029	0.009	125	4	H-12

♦For Optional Hardware go to Page H-3.

●For Optional Cathode & Gate Lead Kits, go to page H-3.

Thyristor 1, Diode 2 Modules

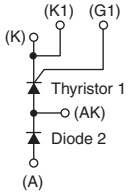

CD42--90B, CD42--90C, CD62--15B, CD62--15C, ND42--21, ND42--25, ND421825, LD42--43, LD42--50, LD421850, LD82--24, PD42--07, PD42--06

Diode 1, Thyristor 2 Modules

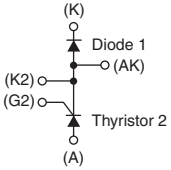

CD47--90B, CD47--90C, CD67--15C, LD47--43, LD47--50, LD471850, ND47--21, ND47--25, ND471825, PD47--07, PD47--06

Thyristor / Diodes (POW-R-BRIKs™) (Refer to device datasheets at www.pwrx. com for test conditions.)

Type	V_{DRM} / V_{RRM} Volts (V_{RSM} = V_{RRM} + 100V)	$I_{T(av)}/T_C$ Amperes/°C (180° sin)	Maximim Power Dissipation (Watts)	E1 - I_{TSM}/I_{FSM} Amperes (180° sin)	E2 - I_{TSM}/I_{FSM} Amperes (180° sin)	Gate V_{gt} Volts	Gate I_{gt} mAmperes	di/dt Amperes/µsec (Non-Repetitive)	dV/dt Volts/µsec	$R_{th(j-c)}$ °C/W (Per Module)	$R_{th(c-s)}$ °C/W (Per Module)	$R_{th(c-a)}$ °C/W (Per Module)	$T_{j(max)}$ °C	Outline Drawings Number	Page
Diode / Diode Modules															
P1Z7AAR700W_	2200 – 3000	355 / 105	1125	7,000	7,000	—	—	—	—	0.04	0.010	0.10	150	7	H-13
P1Z8ABR800W_	1200 – 2200	435 / 105	1125	9,000	9,000	—	—	—	—	0.04	0.010	0.10	150	7	H-13
P1Z9AAR900W_	2200 – 3000	590 / 105	1500	16,000	16,000	—	—	—	—	0.03	0.008	0.08	150	7	H-13
P1Z9ACR900W_	800 - 1200	740 / 105	1500	30,000	30,000	—	—	—	—	0.03	0.008	0.08	150	7	H-13
P1Z9ADR900W_	600	800 / 110	1330	50,000	50,000	—	—	—	—	0.03	0.008	0.08	150	7	H-13
P1ZAADDA00W_	3600 - 5000	985 / 80	—	24,000	24,000	—	—	—	—	0.024	0.007	0.08	150	7	H-13
P1ZAABRA00W_	2200 - 3000	1270 / 80	—	—	—	—	—	—	—	0.03	0.008	0.08	150	7	H-13
P1ZAACRA00W_	1800 - 2200	1420 / 80	—	—	—	—	—	—	—	0.03	0.008	0.08	150	7	H-13
P1ZAADRA00W_	1200 - 1800	1585 / 80	—	—	—	—		—	—	0.03	0.008	0.08	150	7	H-13
Half Controlled SCR / Diode Modules															
P2Z7ABB700W_	1600 – 2200	380 / 85	1100	9,000	9,000	3	150	600	300	0.04	0.010	0.10	130	7	H-13
P2Z7ACB700W_	1200 – 1600	395 / 85	1100	10,000	14,000	3	150	600	300	0.04	0.010	0.10	130	7	H-13
P2Z9AAA900W_	2000 – 3000	430 / 85	1325	15,000	16,000	3	200	600	300	0.03	0.008	0.08	125	7	H-13
P2Z9ABA900W_	1600 - 2000	520 / 85	1465	17,000	16,000	3	200	600	300	0.03	0.008	0.08	130	7	H-13
P2Z9ACA900W_	1200 - 1600	590 / 85	1465	25,000	16,000	3	200	600	300	0.03	0.008	0.08	130	7	H-13
P2ZAABAA00W_	1200 - 2200	880 / 80	—	—	—	3	200	400	300	0.03	0.008	0.08	125	7	H-13
Full Control SCR / SCR Modules															
P3Z8AAT800W_	2200 – 3000	300 / 85	1095	9,000	9,000	3	150	600	300	0.04	0.010	0.10	130	7	H-13
P3Z7ABT700W_	1600 – 2200	345 / 85	1095	9,000	9,000	3	150	600	300	0.04	0.010	0.10	130	7	H-13
P3Z9AAT900W_	2000 - 3000	355 / 85	1295	15,000	15,000	3	200	600	300	0.03	0.008	0.08	125	7	H-13
P3Z7ACT700W_	1200 – 1600	375 / 85	1095	10,000	10,000	3	150	600	300	0.04	0.010	0.10	130	7	H-13
P3Z8ABT800W_	1400 - 2200	390 / 85	1095	12,000	12,000	3	150	600	300	0.04	0.010	0.10	130	7	H-13
P3Z8ACT800W_	1200 - 1400	450 / 85	1095	15,000	15,000	3	150	600	300	0.04	0.010	0.10	130	7	H-13
P3Z9ABT900W_	1600 - 2000	470 / 85	1460	17,000	17,000	3	200	600	300	0.03	0.008	0.08	130	7	H-13
P3Z9ACT900W_	1200 - 1600	600 / 85	1460	25,000	25,000	3	200	600	300	0.03	0.008	0.08	130	7	H-13
P3ZAABTA00W_	1200 - 2200	880 / 80	—	—	—	3	200	400	300	0.03	0.008	0.08	125	7	H-13
Half Controlled Diode / SCR Modules															
P7Z7ABB700W_	1600 – 2200	380 / 85	1100	9,000	9,000	3	150	600	300	0.04	0.010	0.10	130	7	H-13
P7Z7ABC700W_	1200 – 1600	395 / 85	1100	14,000	10,000	3	150	600	300	0.04	0.010	0.10	130	7	H-13
P7Z9AAA900W_	2000 – 3000	430 / 85	1325	16,000	15,000	3	200	600	300	0.03	0.008	0.08	125	7	H-13
P7Z9AAB900W_	1600 - 2000	520 / 85	1465	16,000	17,000	3	200	600	300	0.03	0.008	0.08	130	7	H-13
P7Z9AAC900W_	1200 - 1600	590 / 85	1465	16,000	25,000	3	200	600	300	0.03	0.008	0.08	130	7	H-13
P7ZAAABA00W_	1200 - 2200	880 / 80	—	—	—	3	200	400	300	0.03	0.008	0.08	125	7	H-13

Diode / Diode

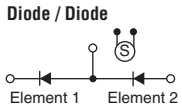

P1Z7AAR700W_, P1Z8ABR800W_, P1Z9AAR900W_, P1Z9ACR900W_, P1Z9ADR900W_, P1ZAADDA00W_, P1ZAABRA00W_,P1ZAACRA00W_, P1ZAADRA00W_

SCR / Diode

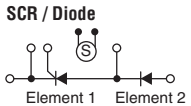

P2Z7ABB700W_, P2Z7ACB700W_, P2Z9AAA900W_, P2Z9ABA900W_, P2Z9ACA900W_, P2ZAABAA00W_

SCR / SCR

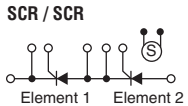

P3Z7ABT700W_, P3Z7ACT700W_, P3Z8AAT800W_, P3Z8ABT800W_, P3Z8ACT800W_, P3Z9AAT900W_, P3Z9ABT900W_, P3Z9ACT900W_, P3ZAABTA00W_

Diode / SCR

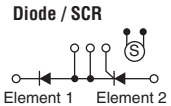

P7Z7ABB700W_, P7Z7ABC700W_, P7Z9AAA900W_, P7Z9AAB900W_, P7Z9AAC900W_, P7ZAAABA00W_

1 CD42--90B, CD43--90B, CD47--90B

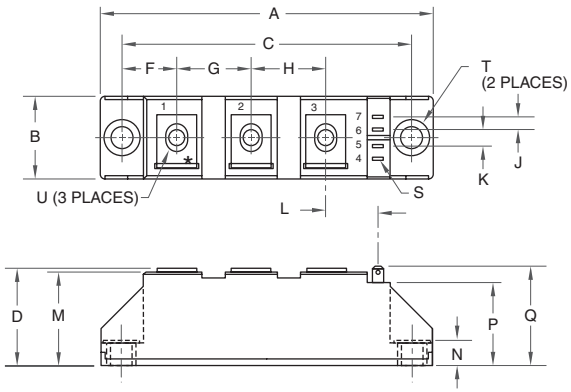

Dim.	Inches	Millimeters
A	3.66	93.0
B	0.79	20.0
C	3.15	80.0
D	1.18	30.0
F	0.61	15.5
G	0.79	20.0
H	0.79	20.0
J	0.16	4.0
K	0.22	5.7

Dim.	Inches	Millimeters
L	0.59	15.5
M	1.10	28.0
N	0.31	8.0
P	0.94	24.0
Q	1.16	29.4
S	0.11 x 0.03	2.8 x 0.8
T	0.25	6.4
U	M5 Metric	M5

2 CD61, CD62--16B, CD63--15B, CD67, CS61*

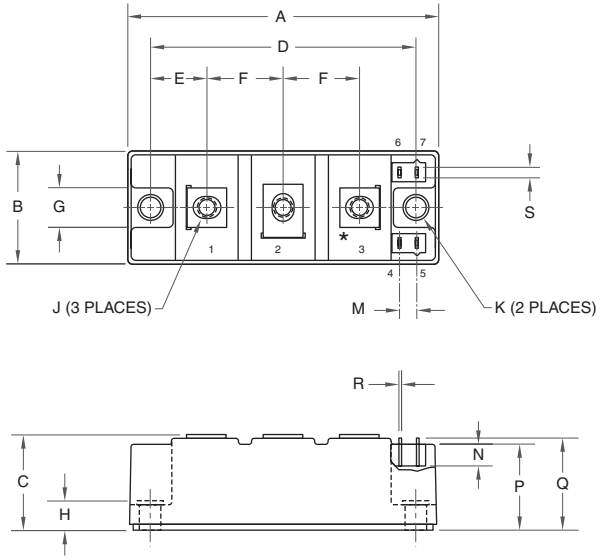

*CS61 TERMINAL 3 IS NOT PRESENT

Dim.	Inches	Millimeters
A	3.70	94.0
B	1.34	34.0
C	1.18	30.0
D	3.15	80.0
E	0.67	17.0
F	0.91	23.0
G	0.51	13.0
H	0.35	8.3

Dim.	Inches	Millimeters
J	M6 Metric	M6
K	0.26	6.4
M	0.02	5.0*
N	0.28	6.0*
P	1.06	27.0*
Q	1.14	29.0*
R	0.03	0.8*
S	0.11	2.8*

*Does not apply to CD61--16B, and CS61--16B.

3 LS41, LS43, LS81, LS83

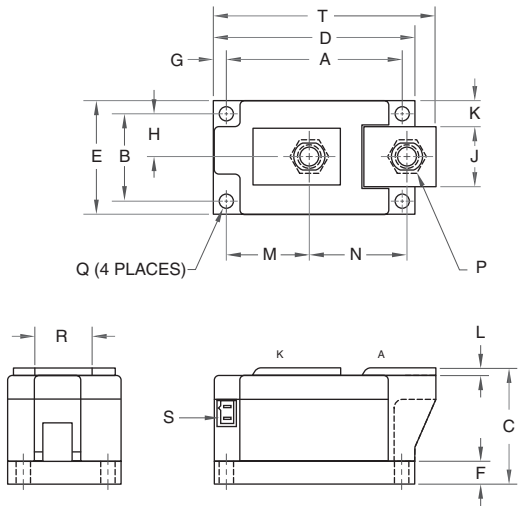

Dim.	Inches	Millimeters
A	3.15	80.0
B	1.50	38.0
C	2.05	52.1
D	3.62	92.0
E	1.97	50.0
F	0.39	9.9
G	0.24	6.1
H	0.75	19.0
J	0.99	25.1

Dim.	Inches	Millimeters
K	0.48	12.2
L	0.12	3.1
M	1.45	36.8
N	1.76	44.77
P	M10 Metric	M10
Q	9.25 Dia.	6.35 Dia.
S	0.110 x 0.032	2.5 x 0.8*
T	3.99	101.3

*Does not apply to LS41--60.

4 PA43, PD41, PD42, PD43, PD47, PS41, PS415014, PS43

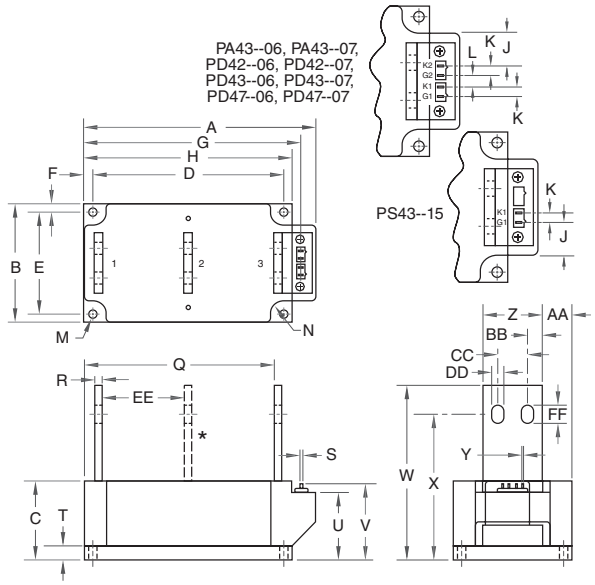

Dim.	Inches	Millimeters
A	7.80	198.1
B	4.0	101.6
C	2.68	68.1
D	6.44	163.6
E	3.44	87.4
F	0.28	7.1
G	7.31	185.7
H	7.0	177.8
J	1.65	42.0*
K	0.21	5.3*
L	0.28	7.1*
M	0.281	7.1
N	0.45	11.4
P	0.54	13.7
Q	5.93	150.6

Dim.	Inches	Millimeters
R	0.19	4.8
S	0.11	2.8*
T	0.48	12.2
U	2.28	58.0
V	2.54	64.5
W	4.93	125.2
X	3.81	96.8
Y	0.03	0.8*
Z	2.0	50.8
AA	1.0	25.4
BB	0.5	12.7
CC	1.0	25.4
DD	0.406	10.3
EE	2.87	72.9*
FF	0.66	16.8

*Does not apply to PD41--11, PS41--25.

5 ND41, ND42, ND43, ND47, NS41

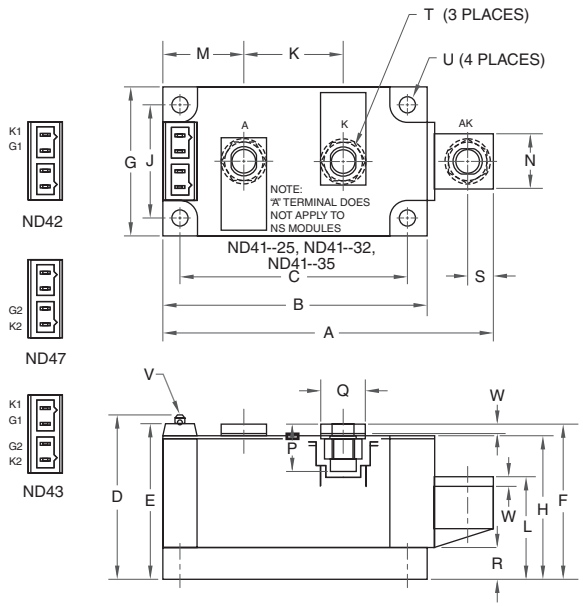

Dim.	Inches	Millimeters
A	4.57	116.0
B	3.66	93.0
C	3.15	80.0
D	2.17	55.1
E	2.06	52.3
F	2.07	52.0
G	1.97	50.0
H	1.90	48.3
J	1.50	38.1
K	1.36	35.0
L	1.26	32.0

Dim.	Inches	Millimeters
M	1.122	28.5
N	0.71	18.0
P	0.57	14.5
Q	0.625	15.9
R	0.394	10.0
S	0.35	8.9
T	M8 Metric	M8
U	0.25 Dia.	6.35 Dia.
V	0.110 x 0.032	2.8 x 0.8*
W	0.12	3.0

*Does not apply to ND41--26, ND41--32, and ND41--35.

6 LD41, LD42, LD43, LD47, LD81, LD82, LD83

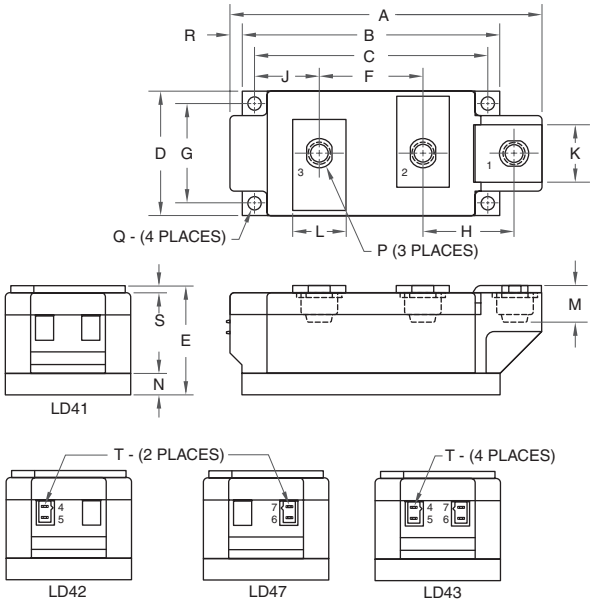

Dim.	Inches	Millimeters
A	5.91	150.0
B	4.88	124.0
C	4.41	112.0
D	2.36	60.0
E	2.05	52.0
F	1.97	50.0
G	1.89	48.0
H	1.73	44.0
J	1.22	31.0

Dim.	Inches	Millimeters
K	1.10	28.0
L	1.00	25.4
M	0.69	17.5
N	0.39	10.0
P	M10 Metric	M10
Q	0.26 Dia.	6.5 Dia.
R	0.24	6.0
S	0.12	3.0
T	0.110 x 0.32	2.5 x 0.8*

*Does not apply to LD41--60.

7 P1Z7, P1Z8, P1Z9, P1ZA, P2Z7, P2Z9, P2ZA, P3Z7, P3Z8, P3Z9, P3ZA, P7Z7, P7Z9, P7ZA

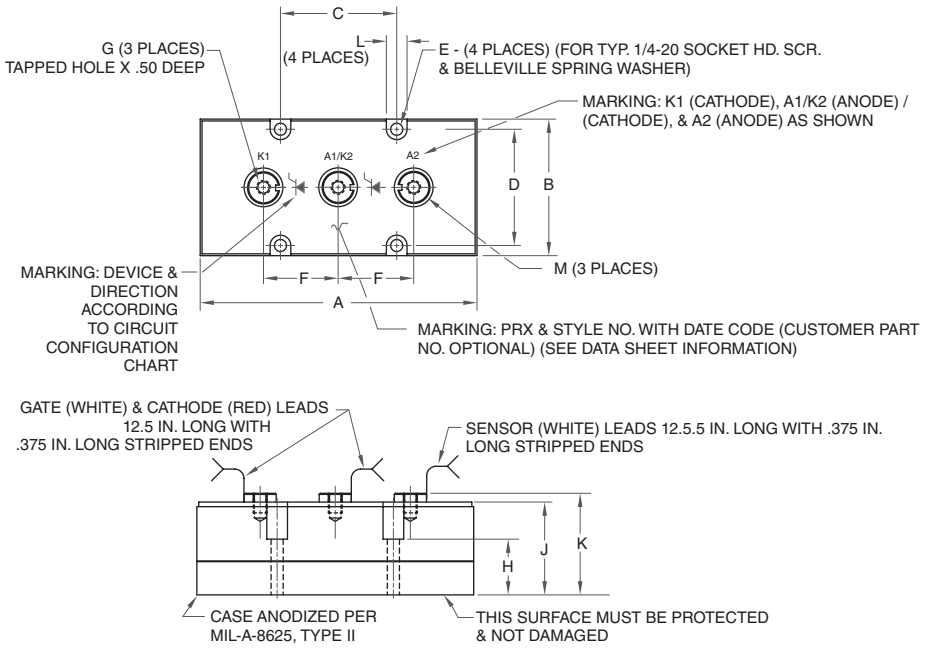

8 CD41--99C, CD41--99D, CD411699D

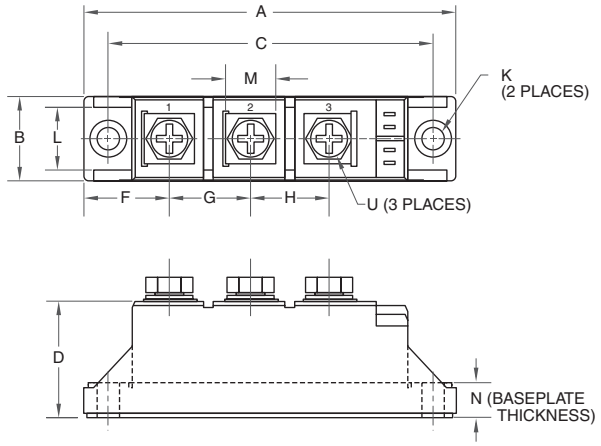

ZAA Modules

Dim.	Inches	Millimeters
A	8.5	215.9
B	4.33	109.98
C	3.15	80.01
D	3.78	96.01
E	0.328 Dia.	8.33 Dia.
F	2.34±0.03	59.4±0.8
G	7/16-14 UNC-2B	
H	2.14	54.36
J	3.15	80.01
K	3.38	85.85
L	0.56	14.22
M	1.12	28.45

Z7A / Z8A Modules

Dim.	Inches	Millimeters
A	6.30	153.16
B	3.03	76.96
C	3.15	80.01
D	2.47	62.73
E	0.328 Dia.	8.33 Dia.
F	1.83±0.03	46.48±0.8
G	5/16-18 UNC-2B	
H	1.27	32.25
J	2.09	53.08
K	2.25	57.15
L	0.58	14.22

Z9A Modules

Dim.	Inches	Millimeters
A	7.50	190.5
B	3.70	93.98
C	3.15	80.01
D	3.15	80.01
E	0.328 Dia.	8.33 Dia.
F	2.03±0.03	51.56±0.8
G	3/8-16 UNC-2B	
H	1.51	38.35
J	2.52	64.0
K	2.75	69.85
L	0.56	14.22

Dim.	Inches	Millimeters
A	3.62	92.0
B	0.83	21.0
C	3.15	80.0
D	1.18	30.0
F	0.83	21.0
G	0.79	20.0

Dim.	Inches	Millimeters
H	0.79	20.0
K	0.24 Dia.	6.2 Dia.
L	0.63	16.0
M	0.51	13.0
U	M5 Metric	M5

CD41--99C

Dim.	Inches	Millimeters
N	0.33	8.5

CD41--99D

Dim.	Inches	Millimeters
N	0.24	6.1

9 CD43--90C, CD43--99C

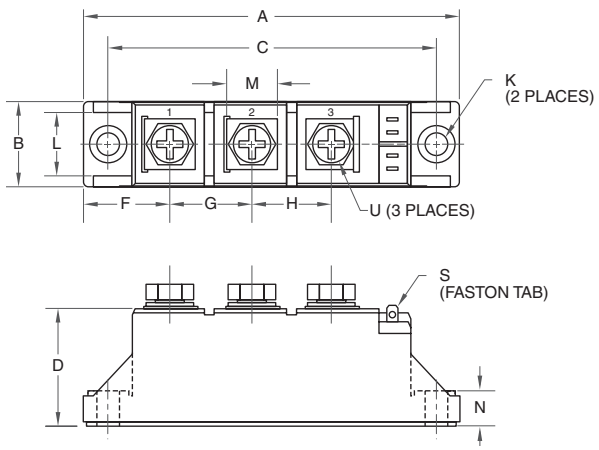

Dim.	Inches	Millimeters
A	3.62	92.0
B	0.83	21.0
C	3.15	80.0
D	1.18	30.0
F	0.83	21.0
G	0.79	20.0
H	0.79	20.0

Dim.	Inches	Millimeters
K	0.24	6.2
L	0.63	16.0
M	0.51	13.0
N	0.33	8.5
S	0.11 x 0.02	2.8 x 0.5
U	M5 Metric	M5

10 CD61--16C, CD61--20C, CS61--16C

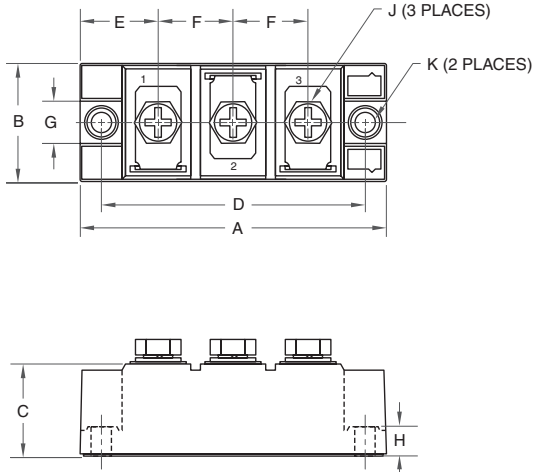

Dim.	Inches	Millimeters
A	3.70	94.0
B	1.34	34.0
C	1.15	29.2
D	3.15	80.0
E	0.94	24.0

Dim.	Inches	Millimeters
F	0.91	23.0
G	0.51	13.0
H	0.35	9.0
J	M6 Metric	M6
K	0.24 Dia.	6.2 Dia.

11 CD63--15C

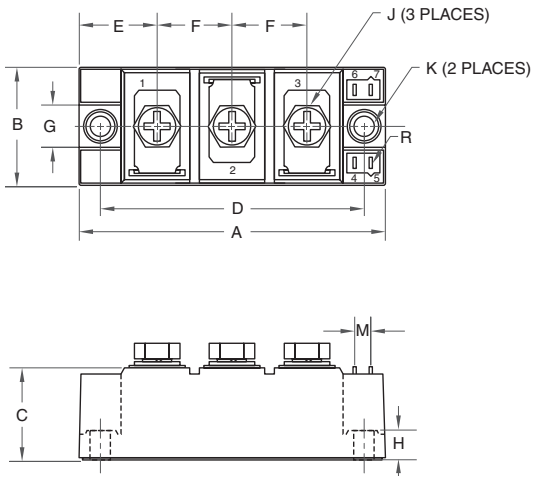

Dim.	Inches	Millimeters
A	3.70	94.0
B	1.34	34.0
C	1.15	29.2
D	3.15	80.0
E	0.94	24.0
F	0.91	23.0

Dim.	Inches	Millimeters
G	0.51	13.0
H	0.35	9.0
J	M6 Metric	M6
K	0.24 Dia.	6.2 Dia.
M	0.19	4.9
R	0.03 x 0.11	2.8 x 0.8

12 CD42--90C, CD47--90C

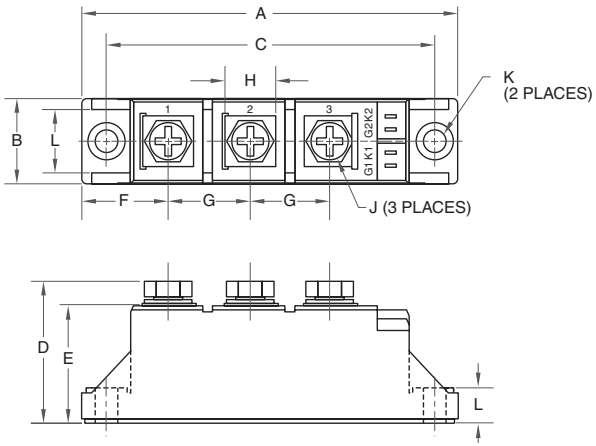

Dim.	Inches	Millimeters
A	3.62	92.0
B	0.83	21.0
C	3.15	80.0
D	1.38	35.0
E	1.18	30.0

Dim.	Inches	Millimeters
F	0.83	21.0
G	0.79	20.0
H	0.51	13.0
J	M5 Metric	M5
K	0.24 Dia.	6.2 Dia.

13 CD62--15C, CD67--15C

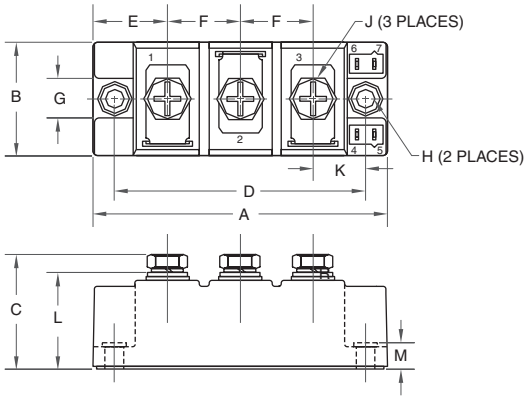

Dim.	Inches	Millimeters
A	3.70	94.0
B	1.34	34.0
C	1.42	36.0
D	3.15	80.0
E	0.94	24.0
F	0.91	23.0

Dim.	Inches	Millimeters
G	0.51	13.0
H	0.24 Dia.	6.2 Dia.
J	M6 Metric	M6
K	0.67	17.0
L	1.15	29.2
M	0.35	9.0

14 Lead Kits MR, MQ

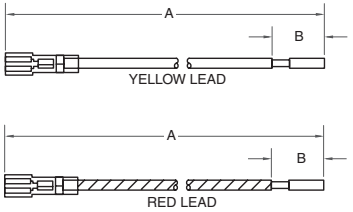

1. WIRE COMPOSITION:
   AWG 22, TINNED COPPER STRAND WIRE WITH ETEF INSULATION RATED TO 125°C
2. LEAD COLOR:
   RED (CATHODE) AND YELLOW (GATE). BOTH WITH INSULATED TERMINALS
3. RECEPTACLES:
   FEMALE TERMINAL WITH NYLON INSULATOR THAT FITS .11 x .03 IN. BLADES

MQ KIT: TWO RED & TWO YELLOW LEADS / MODULE

MR KIT: ONE RED & ONE YELLOW LEAD / MODULE

Dim.	Inches	Millimeters
A	0.46	11.80
B	0.01	0.26

15 Lead Kits NK, NL, NM

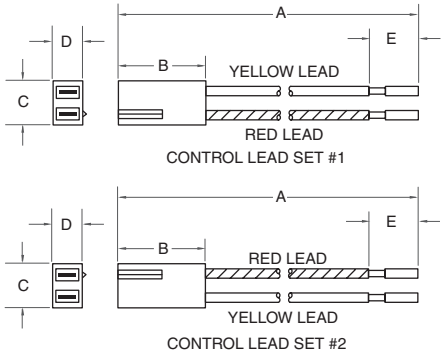

1. WIRE COMPOSITION:
   AWG 22, TINNED COPPER STRAND WIRE WITH ETEF INSULATION RATED TO 125°C
2. LEAD COLOR:
   RED (CATHODE) AND YELLOW (GATE). RED LEAD IS POSITIONED NEXT TO KEY ON BLACK POLARIZED HOUSING.
3. RECEPTACLES:
   FEMALE TERMINAL WITH LOCKING TAB FITS .11 x .03 IN. BLADES

NK KIT: LEAD SET 1 & LEAD SET 2 - ONE EACH / MODULE

NL KIT: LEAD SET 1 - ONE / MODULE

NM KIT: LEAD SET 2 - ONE / MODULE

Dim.	Inches	Millimeters
A	0.54	13.80
B	0.03	0.79
C	0.015	0.39

Dim.	Inches	Millimeters
D	0.009	0.23
E	0.01	0.26

16 QRD4518001, QRD6516001

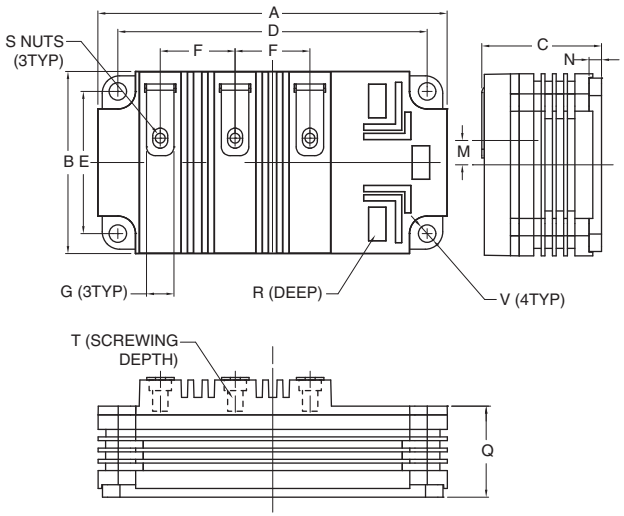

Dim.	Inches	Millimeters
A	5.51	140.0
B	2.87	73.0
C	1.89	48.0
D	4.88±0.01	124.0±0.25
E	2.24±0.01	57.0±0.25
F	1.18	30.0
G	0.43	11.0

Dim.	Inches	Millimeters
M	0.38	9.75
N	0.20	5.0
Q	1.44	36.5
R	0.16	4.0
S	M6 Metric	M6
T	0.63 Min.	16.0 Min.
V	0.28 Dia.	7.0 Dia.

FAST RECOVERY DIODE MODULES

Fast Recovery Modules
Applications Include:

- Motor Controls
- Power Supplies
- Switching Power Supplies
- Transportation
- Welding

Circuit Configurations:

- Single
- Dual
- Common Anode
- Common Cathode

TABLE OF CONTENTS

Numbering System I-2
Single Fast Recovery Diodes I-2
Dual Fast Recovery Diodes I-4
Common Anode Fast Recovery Diodes I-6
Common Cathode Fast Recovery Diodes I-6
Outline Drawings I-7

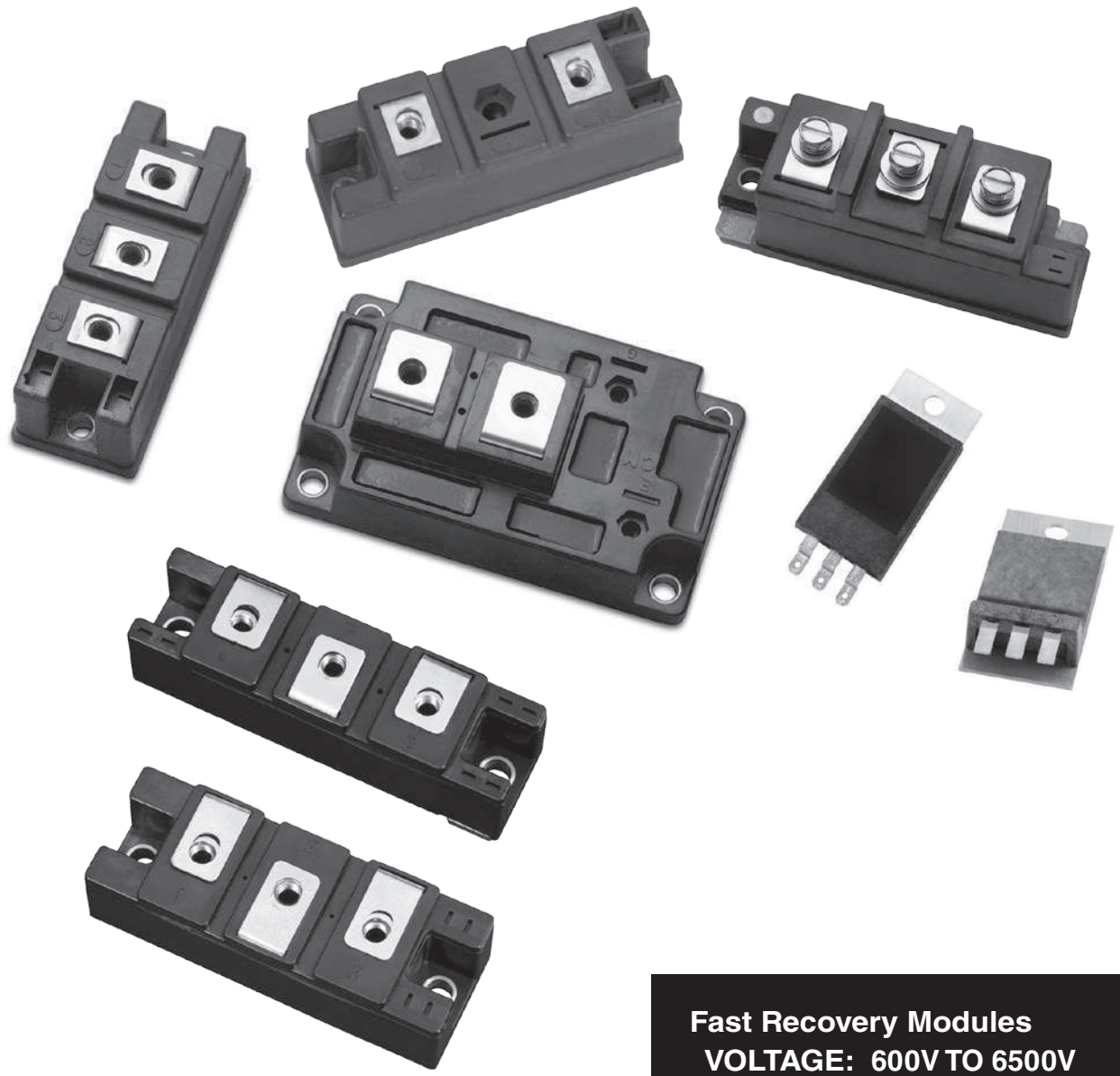

Fast Recovery Modules
VOLTAGE: 600V TO 6500V
CURRENT: 33A TO 1800A

Single Fast Recovery Diodes (Refer to device datasheets at www.pwrx. com for test conditions.)

QRS----T30

QRS061K001

QRS171D001

QRS4506001

QRS4506002,
QRS6503002,
QRS6505002

Type	V_{RRM} Volts (V_{RSM} = V_{RRM} + 100V)	$I_{F(av)}/T_C$ Amperes/°C (180° sin)	NORTH AMERICAN I_{FSM} Amperes (8.3ms, $T_{j(max)}$, 100% V_{RRM} Reapplied)	NORTH AMERICAN i^2t A^2 sec (8.3ms, $T_{j(max)}$, 100% V_{RRM} Reapplied)	V_{FM}/I_{FM} Volts/Amperes (T_j = 25°C)	t_{rr} ns	t_{rr} at If Amperes	t_{rr} di/dt Amperes/µs	$R_{th(j-c)}$ °C/W	$R_{th(c-s)}$ °C/W	$T_{j(max)}$ °C	Weight	Outline Drawings Number	Outline Drawings Page
Single Fast Diodes														
QRS0620T30	600	66 / 80	1670	11,620	2.8 / 200	110	200	-400	0.35	0.04	150	220	5	I-8
QRS0640T30	600	128 / 80	2400	24,000	2.8 / 400	110	400	-800	0.18	0.04	150	220	5	I-8
QRS0660T30	600	194 / 80	3600	54,000	2.8 / 600	110	600	-1200	0.12	0.04	150	220	5	I-8
QRS0680T30	600	267 / 80	4800	96,000	2.8 / 800	110	800	-1600	0.09	0.04	150	220	5	I-8
QRS061K001	600	420 / 80	8350	290,000	2.8 / 1000	150	1000	-2000	0.07	0.04	150	400	10	I-10
QRS1220T30	1200	88 / 80	1670	11,620	3.5 / 200	250	200	-400	0.18	0.04	150	220	5	I-8
QRS1240T30	1200	180 / 80	3350	46,760	3.5 / 400	250	400	-800	0.09	0.04	150	220	5	I-8
QRS1260T30	1200	276 / 80	5000	104,100	3.5 / 600	250	600	-1200	0.06	0.04	150	220	5	I-8
QRS171D001	1700	700 / 80	2400	24,000	2.5 / 700	2000	1200	-2400	0.04	0.04	150	400	14	I-11
QRS4506001	4500	60 / 100	120	1900	5.6 / 60	230	67	-800	0.15	0.10	150	21	16	I-12
QRS4506002	4500	60 / 100	120	1900	5.6 / 60	230	67	-800	0.15	0.10	150	20	17	I-12
QRS6503002	6500	33 / 100	TBD	TBD	4.0 / 33	1000	33	-110	0.15	0.10	150	20	17	I-12
QRS6505002	6500	50 / 100	TBD	TBD	3.2 / 50	1700	50	-230	0.14	0.10	150	20	17	I-12

Single Fast Diodes

QRS0620T30, QRS0640T30, QRS0660T30, QRS0680T30, QRS1220T30, QRS1240T30, QRS1260T30

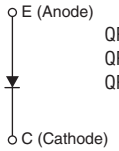

QRS061K001,QRS171D001, QRS4506001, QRS4506002, QRS6503002, QRD6505002

Numbering System

FAST RECOVERY DIODE MODULES

RM400HA-34S is a 400A, 1700V Single Switch Fast Recovery Diode Module

RM 400 HA – 34 S

(1) (2) (3) (4) (5)

(1) Type Number:
RM = Rectifier Module

(2) Current Rating

(3) Package Style:
DB = Dual, Standard Package
DG = Dual, High Isolation
DY = Dual Switch
HA = Single Switch
HC = Single, AlSiC Baseplate
HE = Single, Small Package

(4) Voltage Rating (x 50):
12 = 600V
24 = 1200V
34 = 1700V
66 = 3300V
90 = 4500V
130 = 6500V

(5) Factory Designation

QRD0640R30 is a 600V, 400A Dual Switch RoHs Compliant Fast Recovery Module

Q R D 06 40 R30

(1) (2) (3) (4) (5) (6)

(1) Product Line

(2) Type Number:
R = Rectifier

(3) Package Style:
S = Single Switch
D = Dual Switch
C = Common Cathode
F = Common Anode
J = Inverse Configuration

(4) Voltage Rating (x 100)

(5) Current (x 10)

(6) Serial Designation
R30 = 30mm Terminal Height, RoHS Compliant
T30 = 30mm Terminal Height, Not RoHS Compliant
001 = Special Designation

Single Fast Recovery Diodes (Refer to device datasheets at www.pwrx. com for test conditions.)

RM400HA-34S

Type	V_{RRM} Volts (V_{RSM} = V_{RRM} + 100V)	$I_{F(av)}/T_C$ Amperes/°C (180° sin)	EUROPEAN I_{FSM} Amperes (10ms, $T_{j(max)}$, No V_{RRM} Reapplied)	EUROPEAN i^2t A^2 sec (10ms, $T_{j(max)}$, No V_{RRM} Reapplied)	NORTH AMERICAN I_{FSM} Amperes (8.3ms, $T_{j(max)}$, 100% V_{RRM} Reapplied)	NORTH AMERICAN i^2t A^2 sec (8.3ms, $T_{j(max)}$, 100% V_{RRM} Reapplied)	V_{FM}/I_{FM} Volts/Amperes (25°C)	$R_{th(j-c)}$ °C/W	$R_{th(c-s)}$ °C/W	$T_{j(max)}$ °C	T_{rr} 150°C ns	T_{rr} 25°C ns	Outline Drawings Number	Page
Single Fast Diode														
RM400HA-34S	1700	400 / 90	—	—	8000	260,000	2.5 / 400	0.08	0.04	150	500	—	2	I-7

Type	V_{RRM} Volts (V_{RSM} = V_{RRM} + 100V)	$I_{F(av)}$ Amperes (180° sin)	NORTH AMERICAN I_{FSM} Amperes (8.3ms, $T_{j(max)}$, 100% V_{RRM} Reapplied)	NORTH AMERICAN i^2t A^2 sec (8.3ms, $T_{j(max)}$, 100% V_{RRM} Reapplied)	V_{FM}/I_{FM} Volts/Amperes (25°C)	$R_{th(j-c)}$ °C/W	$R_{th(c-s)}$ °C/W	$T_{j(max)}$ °C	T_{rr} 150°C ns	T_{rr} 25°C ns	Outline Drawings Number	Page
Single High Voltage Fast Diodes												
RM1800HE-34S	1700	1800	9600	384,000	2.9 / 1800	0.022	0.017	150	1800	—	3	I-7
RM1200HE-66S	3300	1200	9600	384,000	3.2 / 1200	0.02	0.015	150	1400 (at 125°C)	—	3	I-7
RM1500HE-66F	3300	1500	12000	598,000	2.6 / 1500	0.0145	0.015	150	900	—	18	I-12
RM600HE-90S	4500	600	4800	95,600	4.8 / 600	0.039	0.015	150	900 (at 125°C)	—	3	I-7
RM900HC-90S	4500	900	7200	216,000	4.8 / 900	0.021	0.016	150	1000 (at 125°C)	—	4	I-8

Single Fast Diodes

RM400HA-34S

Single High Voltage Fast Diodes

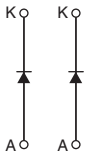

RM1500HE-66F

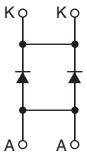

RM600HE-90S,
RM1200HE-66S,
RM1800HE-34S

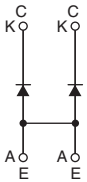

RM900HC-90S

Dual Fast Recovery Diodes (Refer to device datasheets at www.pwrx. com for test conditions.)

RM400DY-24S

QRD0620R30, QRD1220R30

QRD0630R30, QRD0640R30, QRD1230R30, QRD1240R30

QRD3310001, QRD3310002, QRD3310003, QRD3310005

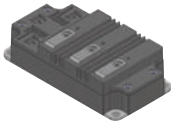
QRD3320004

Type	V_{RRM} Volts ($V_{RSM} = V_{RRM} + 100V$)	$I_{F(av)}/T_C$ Amperes/°C (180° sin)	EUROPEAN I_{FSM} Amperes (10ms, $T_{j(max)}$, No V_{RRM} Reapplied)	EUROPEAN i^2t A^2 sec (10ms, $T_{j(max)}$, No V_{RRM} Reapplied)	NORTH AMERICAN I_{FSM} Amperes (8.3ms, $T_{j(max)}$, 100% V_{RRM} Reapplied)	NORTH AMERICAN i^2t A^2 sec (8.3ms, $T_{j(max)}$, 100% V_{RRM} Reapplied)	V_{FM}/I_{FM} Volts/Amperes (25°C)	$R_{th(j-c)}$ °C/W	$R_{th(c-s)}$ °C/W	$T_{j(max)}$ °C	T_{rr} 150°C ns	T_{rr} 25°C ns	Outline Drawings Number	Outline Drawings Page
Dual Fast Recovery Diodes														
RM400DY-24S	1200	400	—	—	2000	16,600	2.6 / 400	—	0.018	150	290 (@125°C)	250	12	I-10
Dual High Voltage Fast Recovery Diodes														
RM1200DB-34S	1700	1200	—	42,700	—	180,300	2.1 / 1200	0.02	0.024	150	850 (@125°C)	—	13	I-11
RM400DY-66S	3300	400	3200	96,000	—	42,700	4.29 / 400	0.072	0.036	150	—	1200	6	I-8
RM600DY-66S	3300	600	4800	—	6400	96,000	4.55 / 600	0.048	0.024 Typ.	150	—	1200	6	I-8
RM1000DC-66F	3300	1000	—	—	20,800	440	2.2 / 1000	0.024	—	150	850	550	11	I-10
RM1200DB-66S	3300	1200	—	—	9600	384,000	2.8 / 1200	0.018	0.016	150	—	750	4	I-8
RM1500DC-66F	3300	1500	—	—	14,000	980,000	2.2 / 3000	0.016	0.0175	150	850	550	11	I-10
RM900DB-90S	4500	900	—	—	9.4	170,000	4.0 / 900	0.02	0.016	150	—	900	4	I-8

Type	V_{RRM} Volts ($V_{RSM} = V_{RRM} + 100V$)	I_{DC}/T_C Amperes/°C (180° sin)	NORTH AMERICAN I_{FSM} Amperes (8.3ms, $T_{j(max)}$, 100% V_{RRM} Reapplied)	NORTH AMERICAN i^2t A^2 sec (8.3ms, $T_{j(max)}$, 100% V_{RRM} Reapplied)	V_{FM}/I_{FM} Volts/Amperes (T_j = 25°C)	t_{rr} t_{rr} ns	t_{rr} at If Amperes	t_{rr} di/dt Amperes/µs	$R_{th(j-c)}$ °C/W	$R_{th(c-s)}$ °C/W	$T_{j(max)}$ °C	Weight	Outline Drawings Number	Outline Drawings Page
Dual Fast Recovery Diodes														
QRD0620R30	600	140 / 80	TBD	TBD	2.3 / 150	120	100	TBD	0.205	0.2	150	150	1	I-7
QRD0630R30	600	210 / 80	TBD	TBD	2.2 / 150	120	150	TBD	0.137	0.2	150	180	8	I-9
QRD0640R30	600	280 / 80	TBD	TBD	2.2 / 200	120	200	TBD	0.103	0.2	150	180	8	I-9
QRD1220R30	1200	140 / 80	1700	12,000	3.2 / 100	150	100	TBD	0.15	0.2	150	150	1	I-7
QRD1230R30	1200	210 / 80	2550	27,000	3.2 / 150	150	150	TBD	0.1	0.2	150	180	8	I-9
QRD1240R30	1200	280 / 80	3400	48,000	3.2 / 200	150	200	TBD	0.075	0.2	150	180	8	I-9
QRD3310001	3300	86 / 80	TBD	TBD	4.3 / 100	1200	100	-200	0.12	0.05	150	250	9	I-9
QRD3310002	3300	60 / 80	TBD	TBD	4.3 / 100	1200	100	-200	0.2	0.05	150	250	9	I-9
QRD3310003*	3300	86 / 80	TBD	TBD	4.3 / 100	1200	100	-200	0.12	0.005	150	250	9	I-9
QRD3310005	3300	86 / 80	TBD	TBD	4.3 / 100	1200	100	-200	0.12	0.05	150	250	9	I-9
QRD3320004	3300	260 / 80	1900	TBD	3.0 / 200	500	165	TBD	0.096	0.018	150	800	15	I-11

*RoHS Compliant

Dual Fast Recovery Diodes

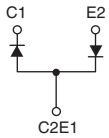

RM400DY-24S

QRD0620R30, QRD0630R30, QRD0640R30, QRD1220R30, QRD1230R30, QRD1240R30, QRD3310001, QRD3310002, QRD3310003

QRD3310005, QRD3320004

Dual High Voltage Fast Recovery Diodes

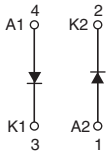

RM1200DB-34S

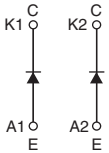

RM400DY-66S, RM600DY-66S, RM900DB-90S, RM1200DB-66S

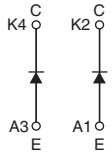

RM1000DC-66F, RM1500DC-66F

Dual Fast Recovery Diodes (Refer to device datasheets at www.pwrx. com for test conditions.)

QRJ0620R30,
QRJ1220R30

QRJ0630R30,
QRJ0640R30,
QRJ1230R30,
QRJ1240R30

Type	V_{RRM} Volts ($V_{RSM} = V_{RRM} + 100V$)	I_{DC}/T_C Amperes/°C (180° sin)	NORTH AMERICAN I_{FSM} Amperes (8.3ms, $T_{j(max)}$, 100% V_{RRM} Reapplied)	NORTH AMERICAN i^2t A^2 sec (8.3ms, $T_{j(max)}$, 100% V_{RRM} Reapplied)	V_{FM}/I_{FM} Volts/Amperes (T_j = 25°C)	t_{rr} t_{rr} ns	t_{rr} at If Amperes	t_{rr} di/dt Amperes/µs	$R_{th(j-c)}$ °C/W	$R_{th(c-s)}$ °C/W	$T_{j(max)}$ °C	Weight	Outline Drawings Number	Outline Drawings Page
Dual Fast Recovery Diodes - Inverse Configuration														
QRJ0620R30	600	140 / 80	TBD	TBD	2.3 / 150	120	100	TBD	0.205	0.2	150	150	1	I-7
QRJ0630R30	600	210 / 80	TBD	TBD	2.2 / 150	120	150	TBD	0.137	0.2	150	180	8	I-9
QRJ0640R30	600	280 / 80	TBD	TBD	2.2 / 200	120	200	TBD	0.103	0.2	150	180	8	I-9
QRJ1220R30	1200	140 / 80	1700	12,000	3.2 / 100	150	100	TBD	0.15	0.2	150	150	1	I-7
QRJ1230R30	1200	210 / 80	2550	27,000	3.2 / 150	150	150	TBD	0.1	0.2	150	180	8	I-9
QRJ1240R30	1200	280 / 80	3400	48,000	3.2 / 200	150	200	TBD	0.075	0.2	150	180	8	I-9

Type	V_{RRM} Volts ($V_{RSM} = V_{RRM} + 100V$)	$I_{F(av)}$ Amperes (180° sin)	NORTH AMERICAN I_{FSM} Amperes (8.3ms, $T_{j(max)}$, 100% V_{RRM} Reapplied)	NORTH AMERICAN i^2t A^2 sec (8.3ms, $T_{j(max)}$, 100% V_{RRM} Reapplied)	V_{FM}/I_{FM} Volts/Amperes (25°C)	$R_{th(j-c)}$ °C/W	$R_{th(c-s)}$ °C/W	$T_{j(max)}$ °C	T_{rr} 125°C ns	T_{rr} 25°C ns	Outline Drawings Number	Outline Drawings Page
Dual High Isolation High Voltage Fast Recovery Diodes												
RM400DG-66S	3300	400	3200	42,700	2.8 / 400	0.054	0.048	150	1,000	—	7	I-9
RM1200DG-66S	3300	1200	9600	384,000	2.8 / 1200	0.018	0.016	150	1,000	—	7	I-9
RM300DG-90S	4500	300	2400	24,000	4.8 / 300	0.066	0.048	150	1,000	700	7	I-9
RM400DG-90F	4500	400	3400	58,000	2.55 / 400	0.0585	0.048	150	900	700	7	I-9
RM800DG-90F	4500	800	6500	211,000	2.55 / 800	0.030	0.024	150	900	700	7	I-9
RM1200DG-90F	4500	1200	9800	480,000	2.55 / 1200	0.020	0.016	150	900	700	7	I-9
RM200DG-130S	6500	200	1600	11,000	4.0 / 200	0.066	0.048	150	1,000	—	7	I-9
RM250DG-130F	6500	250	2350	28,000	3.3 / 500	0.075	0.048	150	600	500	7	I-9
RM600DG-130S	6500	600	4800	96,000	4.0 / 600	0.022	0.016	150	1,000	1,000	7	I-9

Dual Fast Recovery Diodes - Inverse Configuration

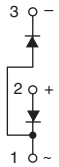

QRJ0620R30, QRJ0630R30,
QRJ0640R30,
QRJ1220R30, QRJ1230R30,
QRJ1240R30

Dual High Isolation High Voltage Fast Recovery Diodes

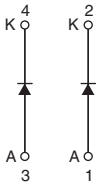

RM200DG-130S,RM250DG-130F,
RM300DG-90S, RM400DG-66S,
RM400DG-90F, RM600DG-130S,
RM800DG-90F, RM1200DG-66S,
RM1200DG-90F

Common Anode Fast Recovery Diodes (Refer to device datasheets at www.pwrx. com for test conditions.)

QRC0620R30, QRC1220R30,
QRF0620R30, QRF1220R30

QRC0630R30, QRC0640R30, QRC1230R30, QRC1240R30

QRF0630R30, QRF0640R30, QRF1230R30, QRF1240R30

QRC3310001,
QRC3310002

Type	V_{RRM} Volts ($V_{RSM} = V_{RRM} + 100V$)	I_{DC}/T_C Amperes/°C (180° sin)	NORTH AMERICAN I_{FSM} Amperes (8.3ms, $T_{j(max)}$, 100% V_{RRM} Reapplied)	NORTH AMERICAN i^2t A^2 sec (8.3ms, $T_{j(max)}$, 100% V_{RRM} Reapplied)	V_{FM}/I_{FM} Volts/Amperes (T_j = 25°C)	t_{rr} t_{rr} ns	t_{rr} at If Amperes	t_{rr} di/dt Amperes/µs	$R_{th(j-c)}$ °C/W	$R_{th(c-s)}$ °C/W	$T_{j(max)}$ °C	Weight	Outline Drawings Number	Outline Drawings Page
QRF0620R30	600	140 / 80	TBD	TBD	2.3 / 150	120	100	TBD	0.205	0.2	150	150	1	I-7
QRF0630R30	600	210 / 80	TBD	TBD	2.2 / 150	120	150	TBD	0.137	0.2	150	180	8	I-9
QRF0640R30	600	280 / 80	TBD	TBD	2.2 / 200	120	200	TBD	0.103	0.2	150	180	8	I-9
QRF1220R30	1200	140 / 80	1700	12,000	3.2 / 100	150	100	TBD	0.15	0.2	150	150	1	I-7
QRF1230R30	1200	210 / 80	2550	27,000	3.2 / 150	150	150	TBD	0.1	0.2	150	180	8	I-9
QRF1240R40	1200	280 / 80	3400	48,000	3.2 / 200	150	200	TBD	0.075	0.02	150	180	8	I-9

Common Cathode Fast Recovery Diodes (Refer to device datasheets at www.pwrx. com for test conditions.)

Type	V_{RRM} Volts ($V_{RSM} = V_{RRM} + 100V$)	I_{DC}/T_C Amperes/°C (180° sin)	NORTH AMERICAN I_{FSM} Amperes (8.3ms, $T_{j(max)}$, 100% V_{RRM} Reapplied)	NORTH AMERICAN i^2t A^2 sec (8.3ms, $T_{j(max)}$, 100% V_{RRM} Reapplied)	V_{FM}/I_{FM} Volts/Amperes (T_j = 25°C)	t_{rr} t_{rr} ns	t_{rr} at If Amperes	t_{rr} di/dt Amperes/µs	$R_{th(j-c)}$ °C/W	$R_{th(c-s)}$ °C/W	$T_{j(max)}$ °C	Weight	Outline Drawings Number	Outline Drawings Page
QRC0620R30	600	140 / 80	TBD	TBD	2.3 / 150	120	100	TBD	0.205	0.2	150	150	1	I-7
QRC0630R30	600	210 / 80	TBD	TBD	2.2 / 150	120	150	TBD	0.137	0.2	150	180	8	I-9
QRC0640R30	600	280 / 80	TBD	TBD	2.2 / 200	120	200	TBD	0.103	0.2	150	180	8	I-9
QRC1220R30	1200	140 / 80	1700	12,000	3.2 / 100	150	100	TBD	0.15	0.2	150	150	1	I-7
QRC1230R30	1200	210 / 80	2550	27,000	3.2 / 150	150	150	TBD	0.1	0.2	150	180	8	I-9
QRC1240R30	1200	280 / 80	3400	48,000	3.2 / 200	150	200	TBD	0.075	0.2	150	180	8	I-9
QRC3310001	3300	86 / 80	TBD	TBD	4.3 / 100	1200	100	-200	0.12	0.05	150	250	9	I-9
QRC3310002	3300	86 / 80	TBD	TBD	4.3 / 100	1200	100	-200	0.2	0.05	150	250	9	I-9

Common Anode Fast Recovery Diodes

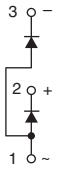

QRF0620R30, QRF0630R30,
QRF0640R30,
QRF1220R30, QRF1230R30,
QRF1240R40

Common Cathode Fast Recovery Diodes

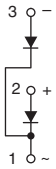

QRC0620R30, QRC0630R30,
QRC0640R30,
QRC1220R30, QRC1230R30,
QRC1240R30
QRC3310001, QRC3310002

1 QR_0620R30, QR_1220R30

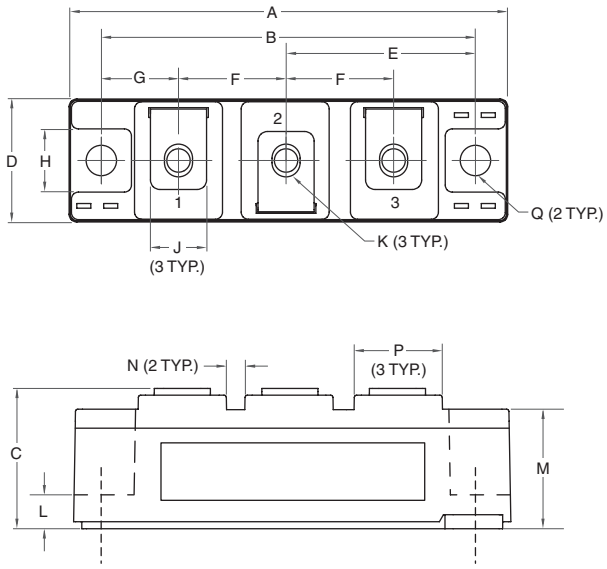

Dim.	Inches	Millimeters
A	3.68	93.5
B	3.150±0.01	80.0±0.25
C	1.18	30.0
D	1.02	26.0
E	1.59	40.5
F	0.90	23.0
G	0.65	16.5
H	0.51	13.0

Dim.	Inches	Millimeters
J	0.47	12.0
K	M5 Metric	M5
L	0.30	7.5
M	1.0	25.4
N	0.16	4.0
P	0.75	19.0
Q	0.256 Dia.	6.5 Dia.

2 RM400HA-34S

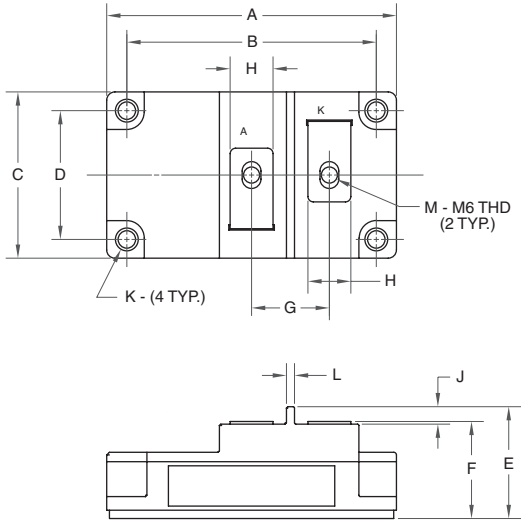

Dim.	Inches	Millimeters
A	4.25 Max.	108.0 Max.
B	3.661±0.012	93.0±0.3
C	2.44 Max.	62.0 Max.
D	1.89±0.012	48.0±0.3
E	1.63 Max.	41.5 Max.
F	1.42 Max.	36.0 Max.

Dim.	Inches	Millimeters
G	1.14	29.0
H	0.63	16.0
J	0.26	6.5
K	0.256 Dia.	6.5 Dia.
L	0.12	3.0
M	M6 Metric	M6

3 RM600HE-90S, RM1200HE-66S, RM1800HE-34S

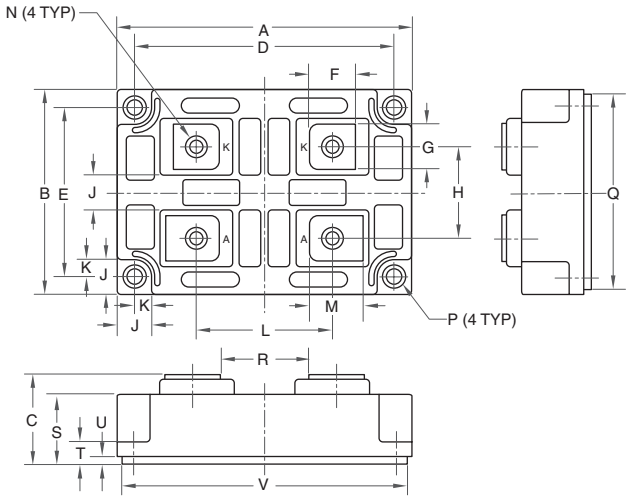

Dim.	Inches	Millimeters
A	5.12+0.04/-0.0	130.0+1.0/-0.0
B	3.54±0.04	90.0±1.0
C	1.50+0.04/-0.0	38.0+1.0/-0.0
D	4.49±0.012	114.0±0.3
E	2.91±0.012	74.0±0.3
F	0.81	20.5
G	0.79	20.0
H	1.57±0.2	40.0±0.5
J	0.59	15.0
K	0.28	7.0

Dim.	Inches	Millimeters
L	2.4±0.2	61.5±0.5
M	0.94	24.0
N	M8 Metric	M8
P	0.26 Dia.	6.5 Dia.
Q	3.37	85.5
R	1.56	39.5
S	1.17	29.7
T	0.37	9.3
U	0.12	3.0
V	4.94	125.5

4 RM900DB-90S, RM900HC-90S, RM1200DB-66S

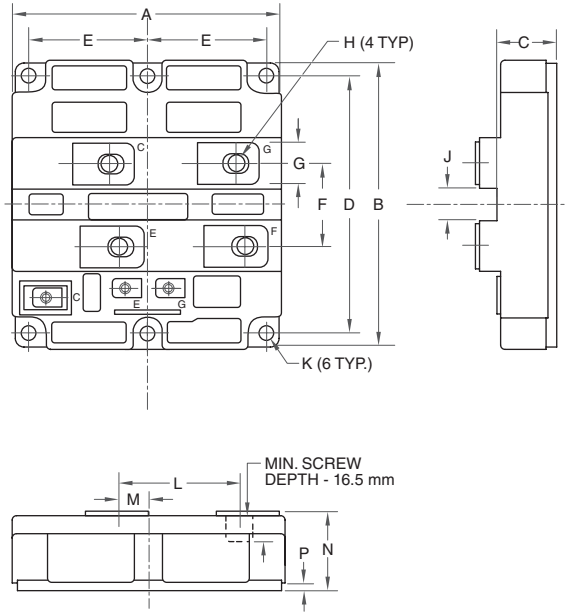

Dim.	Inches	Millimeters
A	5.12	130.0
B	5.51	140.0
C	1.16	29.5
D	4.88±0.01	124.0±0.25
E	2.24±0.01	57.0±0.25
F	1.57	40.0
G	0.79	20.0
H	M8 Metric	M8

Dim.	Inches	Millimeters
J	0.59	15.0
K	0.28 Dia.	7.0 Dia.
L	2.4	61.5
M	0.71	18.0
N	1.5+0.04/-0.0	38.0+1/0/-0.0
P	0.2	5.0

5 QRS0620T30, QRS0640T30, QRS0660T30, QRS0680T30, QRS1220T30, QRS1240T30, QRS1260T30

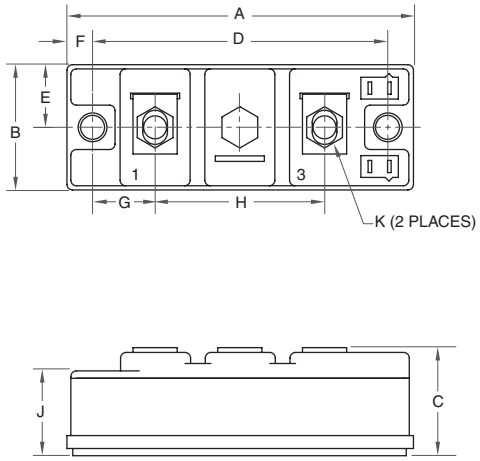

Dim.	Inches	Millimeters
A	3.70	94.0
B	1.34	34.0
C	1.18	30.0
D	3.15	80.0
E	0.67	17.0

Dim.	Inches	Millimeters
F	0.28	6.99
G	0.67	17.1
H	1.81	46.0
J	0.91	23.0
K	M6 x 1.0 Metric	M6 x 1.0

6 RM400DY-66S, RM600DY-66S

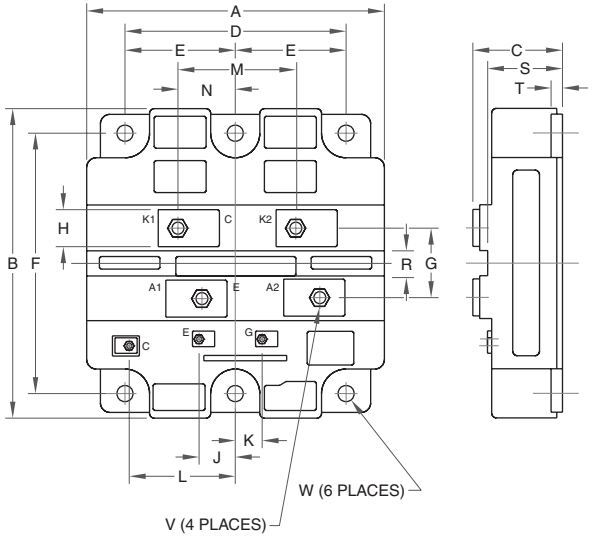

Dim.	Inches	Millimeters
A	5.12	130.0
B	5.51	140.0
C	1.50+0.8/-0.0	38.0+2.0/-0.0
D	4.49	114.0
E	2.24±0.01	57.0±0.25
F	4.88±0.01	124.0±0.25
G	1.58	40.0
H	0.79	20.0

Dim.	Inches	Millimeters
M	2.42	61.5
N	0.71	18.0
R	0.59	15.0
S	1.18	30.0
T	0.20	5.0
V	M8 Metric	M8
W	0.28 Dia.	7.0 Dia.

7 RM200DG-130S, RM250DG-130F, RM300DG-90S, RM400DG-66S, RM400DG-90F, RM600DG-130S, RM800DG-90F, RM1200DG-66S, RM1200DG-90F

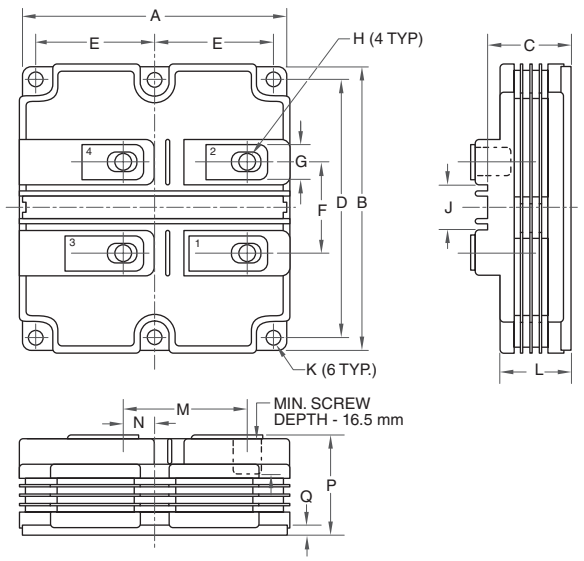

Dim.	Inches	Millimeters
A	5.12±0.2	130.0±0.5
B	5.51±0.2	140.0±0.5
C	1.59±0.2	40.4±0.5
D	4.88±0.01	124.0±0.25
E	2.24±0.01	57.0±0.25
F	1.73±0.2	44.0±0.5
G	0.67±0.004	17.0±0.1
H	M8 Metric	M8

Dim.	Inches	Millimeters
J	0.87±0.012	22.0±0.3
K	0.28 Dia.	7.0 Dia.
L	1.35±0.2	34.4±0.5
M	2.41±0.2	61.2±0.5
N	0.65±0.2	16.5±0.5
P	1.89+0.04/-0.0	48.0+1/0/-0.0
Q	0.2±0.006	5.0±0.15

8 QR_0630R30, QR_0640R30, QR_1230R30, QR_1240R30

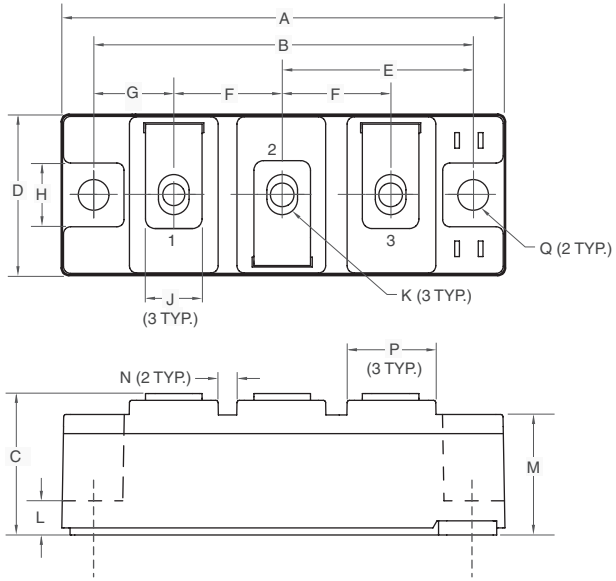

Dim.	Inches	Millimeters
A	3.70	94.0
B	3.150±0.01	80.0±0.25
C	1.18	30.0
D	1.34	34.0
E	1.57	40.0
F	0.90	23.0
G	0.67	17.0
H	0.51	13.0

Dim.	Inches	Millimeters
J	0.47	12.0
K	M6 Metric	M6
L	0.30	7.5
M	1.0	25.4
N	0.16	4.0
P	0.75	19.0
Q	0.256 Dia.	6.5 Dia.

9 QRC3310001, QRC3310002, QRD3310001, QRD3310002, QRD3310003, QRD3310005

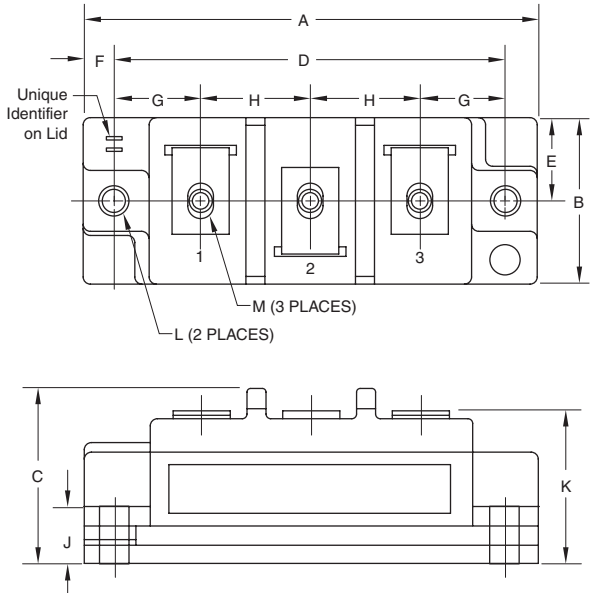

Dim.	Inches	Millimeters
A	3.70	94.0
B	1.34	34.0
C	1.40	35.6
D	3.15	80.0
E	0.67	17.0
F	0.28	6.99

Dim.	Inches	Millimeters
G	0.67	17.1
H	0.91	23.0
J	0.36	9.0
K	1.18	30.0
L	0.216	5.5
M	#10-32	#10-32

10 QRS061K001

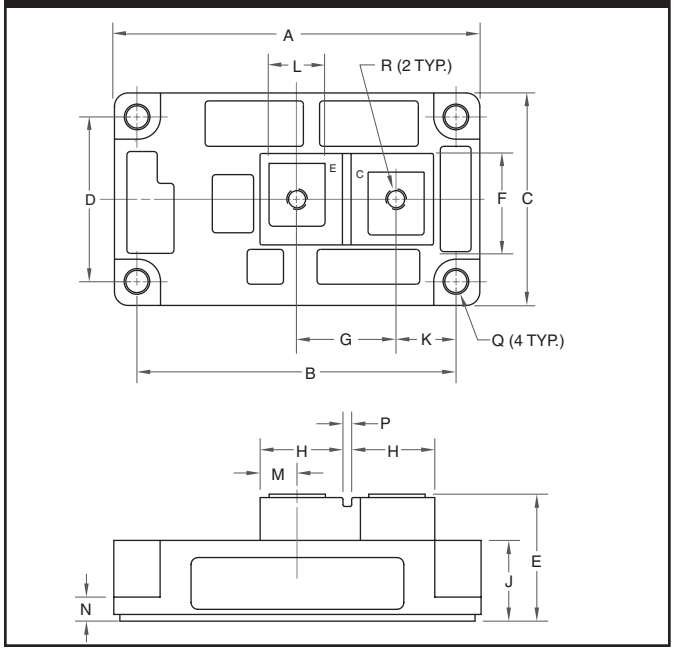

Dim.	Inches	Millimeters
A	4.21	107.0
B	3.661±0.01	93.0±0.25
C	2.44	62.0
D	1.89±0.01	48.0±0.25
E	1.42 Max.	36.0 Max.
F	1.18	30.0
G	1.14	29.0
H	0.94	24.0

Dim.	Inches	Millimeters
J	0.93	23.5
K	0.69	17.5
L	0.63	16.0
M	0.43	11.0
N	0.28	7.0
P	0.12	3.0
Q	0.26 Dia.	6.5 Dia.
R	M6 Metric	M6

11 RM1000DC-66F, RM1500DC-66F

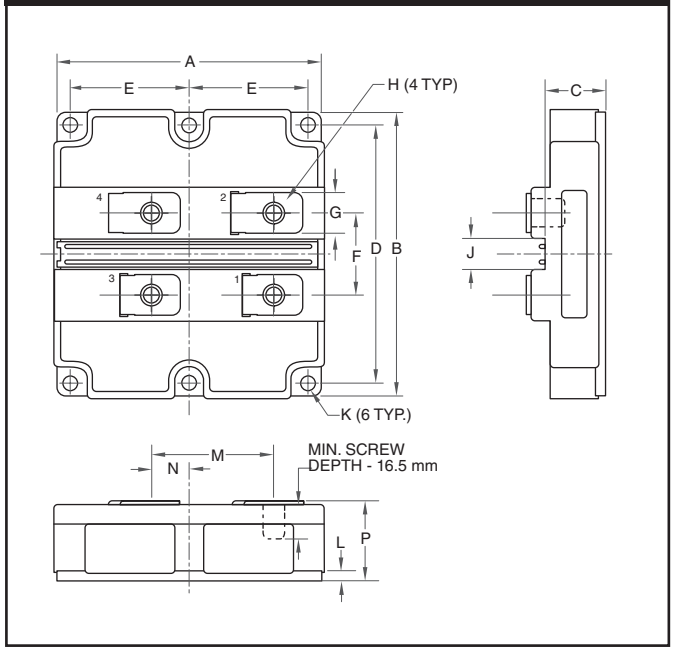

Dim.	Inches	Millimeters
A	5.12±0.02	130.0±0.5
B	5.51±0.02	140.0±0.5
C	1.16±0.02	29.5±0.5
D	4.88±0.009	124.0±0.25
E	2.24±0.009	57.0±0.25
F	1.57±0.012	40.0±0.3
G	0.79+0.039/-0.008	20.0+1.0/-0.2

Dim.	Inches	Millimeters
H	M8 Metric	M8
J	0.59±0.012	15.0±0.3
K	0.28 Dia.	7.0 Dia.
L	0.2±0.008	5.0±0.2
M	2.42±0.012	61.5±0.3
N	0.71±0.012	18.0±0.3
P	1.5+0.04/-0.0	38.0+1.0/-0.0

12 RM400DY-24S

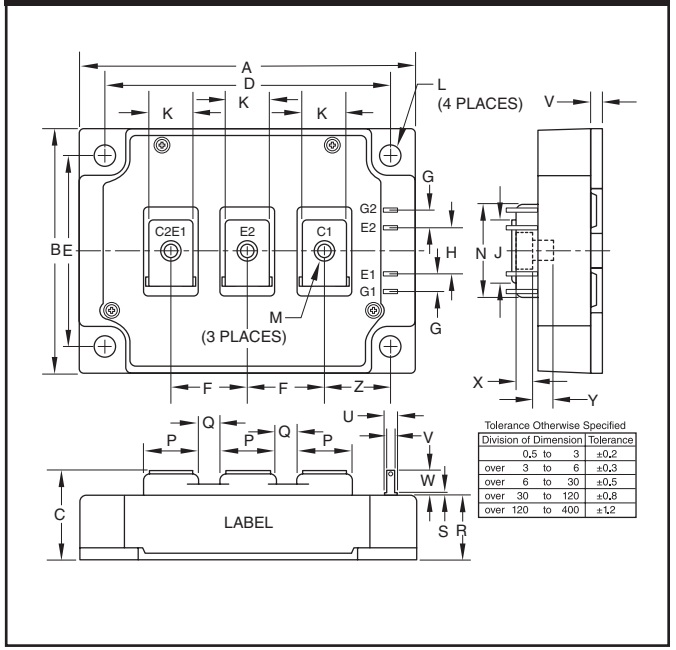

Dim.	Inches	Millimeters
A	4.33	110.0
B	3.15	80.0
C	1.14+0.04/-0.02	29.0+1.0/-0.5
D	3.66±0.01	93.0±0.25
E	2.44±0.01	62.0±0.25
F	0.98	25.0
G	0.24	6.0
H	0.59	15.0
J	0.81	20.5
K	0.55	14.0
L	0.26 Dia.	Dia. 6.5
M	M6 Metric	M6

Dim.	Inches	Millimeters
N	1.18	30.0
P	0.71	18.0
Q	0.28	7.0
R	0.83	21.2
S	0.33	8.5
T	0.0157	0.4
U	0.110	2.8
V	0.16	4.0
W	0.30	7.5
X	0.21	5.3
Y	0.47	12.0
Z	0.85	21.5

13 RM1200DB-34S

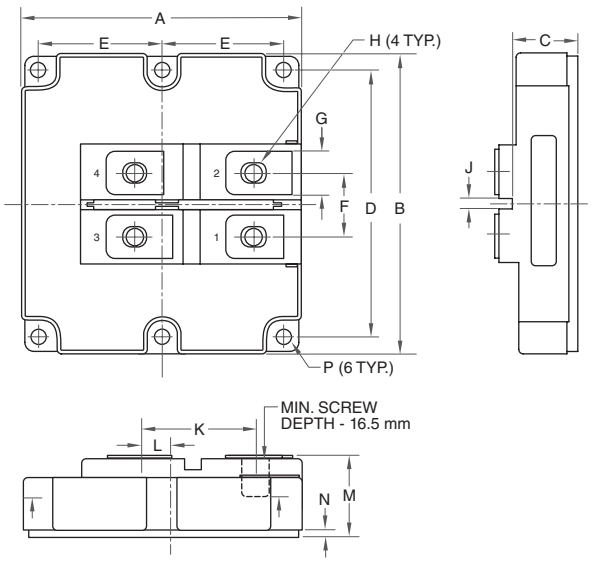

Dim.	Inches	Millimeters
A	5.12±0.02	130.0±0.5
B	5.51±0.02	140.0±0.5
C	1.16±0.02	29.5±0.5
D	4.88±0.009	124.0±0.25
E	2.24±0.009	57.0±0.25
F	1.18±0.008	30.0±0.2
G	0.79±0.004	20.0±0.1

Dim.	Inches	Millimeters
H	M8 Metric	M8
J	0.20±0.008	5.0±0.2
K	2.17±0.012	55.2±0.3
L	0.467±0.008	11.85±0.2
M	1.50+0.039/-0.0	38.0+1.0/-0.0
N	0.2±0.008	5.0±0.2
P	0.28 Dia.	7.0 Dia.

14 QRS1450001, QRS171D001

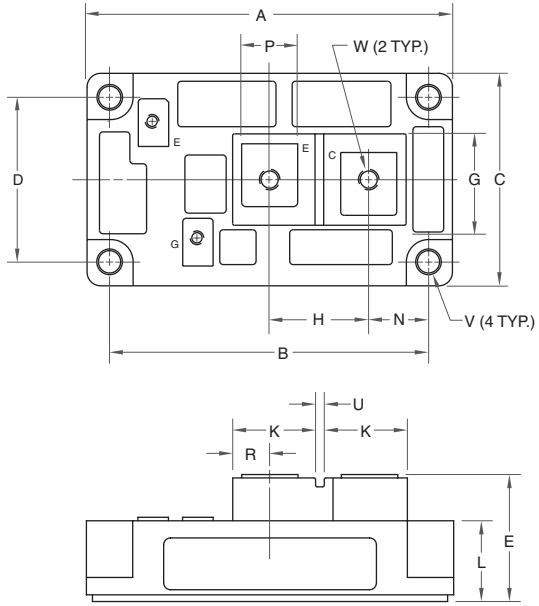

Dim.	Inches	Millimeters
A	4.21	107.0
B	3.661±0.01	93.0±0.25
C	2.44	62.0
D	1.89±0.01	48.0±0.25
E	1.42 Max.	36.0 Max.
G	1.18	30.0
H	1.14	29.0
K	0.94	24.0

Dim.	Inches	Millimeters
L	0.93	23.5
N	0.69	17.5
P	0.63	16.0
R	0.43	11.0
T	0.28	7.0
U	0.12	3.0
V	0.26 Dia.	6.6 Dia.
W	M6 Metric	M6

15 QRD3320004

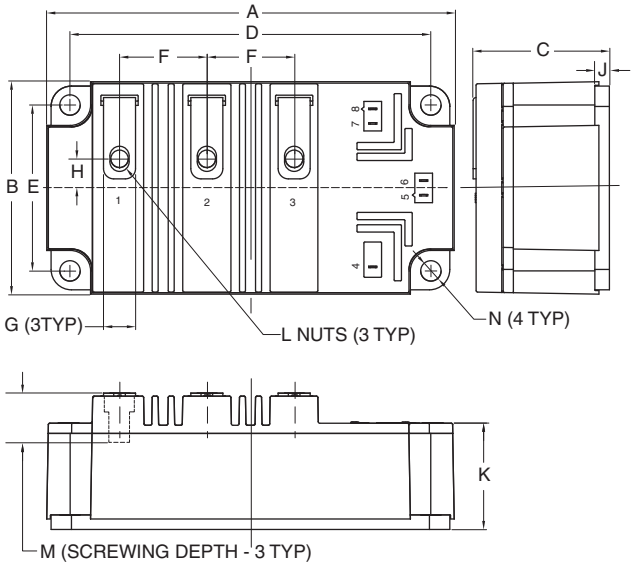

Dim.	Inches	Millimeters
A	5.51	140.0
B	2.87	73.0
C	1.50	38.0
D	4.88±0.01	124.0±0.25
E	2.24±0.01	57.0±0.25
F	1.18	30.0
G	0.43	11.0

Dim.	Inches	Millimeters
H	0.38	9.75
J	0.20	5.0
K	1.04	26.5
L	M5 Metric	M5
M	0.63 Min.	16.0 Min.
N	0.28 Dia.	7.0 Dia.

16 QRS4506001

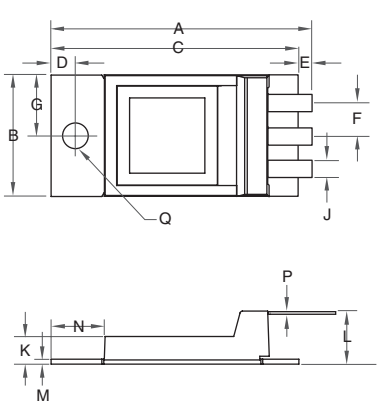

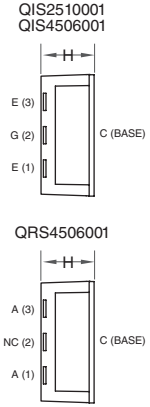

Dim.	Inches	Millimeters
A	2.31	53.6
B	0.98	25.0
C	2.01	51.0
D	0.2	5.0
E	0.1	2.5
F	0.27	6.9
G	0.49	12.5
H	0.46 Max.	11.8 Max.

Dim.	Inches	Millimeters
J	0.14	3.6
K	0.22	5.7
L	0.43	10.8
M	0.04	1.0
N	0.43	10.9
P	0.02	0.5
Q	0.21 Dia.	5.3 Dia.

17 QRS4506002, QRS6503002, QRS6505002

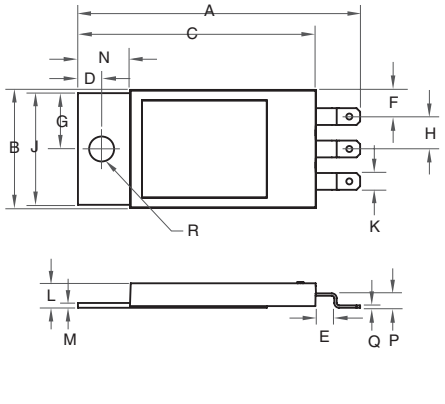

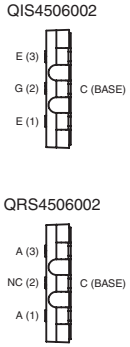

Dim.	Inches	Millimeters
A	2.35	59.7
B	0.98	25.0
C	1.98	50.3
D	0.197	5.0
E	0.22	5.5
F	0.22	5.6
G	0.465	11.8
H	0.27	6.9

Dim.	Inches	Millimeters
J	0.93	23.6
K	0.14	3.6
L	0.20	5.2
M	0.40	1.0
N	0.43	11.0
P	0.20	0.5
Q	0.12	3.0
R	0.208 Dia.	5.3 Dia.

18 RM1500HE-66F

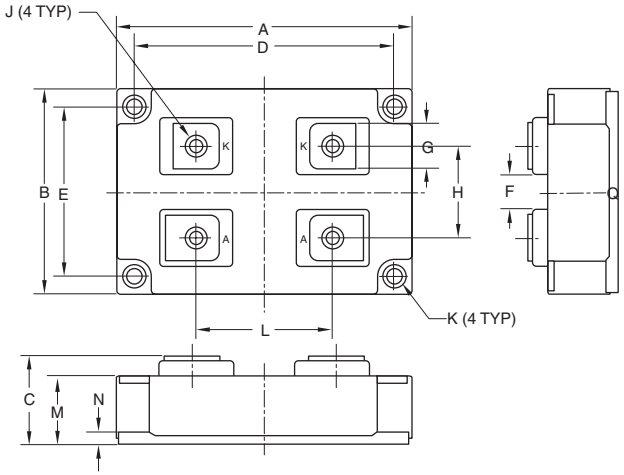

Dim.	Inches	Millimeters
A	5.12±0.02	130.0±0.5
B	3.54±0.02	90.0±0.5
C	1.50+0.04/-0.0	38.0+1.0/-0.0
D	4.49±0.01	114.0±0.25
E	2.91±0.01	74.0±0.25
F	0.59±0.012	15.0±0.3
G	0.79+0.04/-0.008	20.0+1.0/-0.2

Dim.	Inches	Millimeters
H	1.57±0.2	40.0±0.5
J	M8 Metric	M8
K	0.28 Dia.	7.0 Dia.
L	2.4±0.2	61.5±0.5
M	1.17±0.02	29.7±0.5
N	0.2±0.008	5.0±0.2

ASSEMBLIES

Air Cooled / Liquid Cooled / Integrated Power Structures

Powerex has developed a wide line-up of standard air or liquid cooled rectifier / thyristor assemblies in all common circuit configurations utilizing either discrete disc or isolated baseplate power semiconductors. A range of standard extrusions or chill blocks and clamps are used to produce a comprehensive range of assemblies from 100 to 6000A DC output in air cooled and 400 to 15000A DC output when liquid cooled.

When standard assemblies are not sufficient, the Powerex engineering team will design and manufacture power semiconductor assemblies to specific application requirements. These engineered solutions provide the optimum solution to electrical, thermal or mechanical challenges.

Applications Include:

- Battery Chargers
- Induction Heating/Melting
- Motor Controls
- Motor Starters
- Power Supplies
- Transportation
- UPS
- Welding

Circuit Configurations:

- Single
- Half-Bridge
- AC Switch
- Common Cathode/Common Anode
- Single-Phase Bridge
- Three-Phase Bridge

Options Available in Engineered Assemblies:

- Bus Bars
- Fans
- Fuses
- Gate Drive
- Insulators
- Terminal Blocks
- Thermal Sensors
- Snubbers (R-C Transient Suppressors)

TABLE OF CONTENTS

PA Assembly Overview J-2
PD Assembly Overview J-3
Three-Phase AC Switch J-4
Three-Phase DC Rectifier J-6
Three-Phase Half Controlled Rectifier J-8
Three-Phase Full Controlled Rectifier J-10
Outline Drawings J-12
Medium Voltage Assemblies J-17

VOLTAGE: 200V TO 6500V
CURRENT: 30A TO 30,000A

PA Assembly Overview

Powerex assemblies with the PA prefix are available in two varieties. PAA assemblies are disc-based assemblies and PAB assemblies are module-based assemblies.

Fans are not included as part of the standard assembly.

If your application requirements do not allow the selection of a standard assembly, as listed on pages J-4 through J-5, then to determine the proper assembly for your application, the following information is needed:

(1) Choose the Circuit Type:

Single-Phase AC Switch

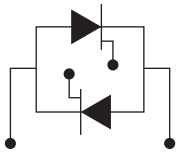

Three-Phase AC Switch

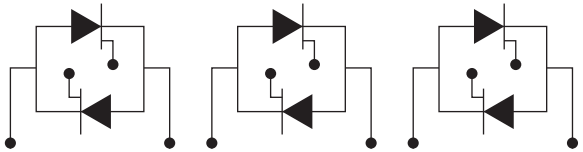

(2) Electrical Parameters:

- Maximum Continuous Output Current (Amps) _____
  Maximum Overload
  - Output DC Current (Amps) _____
  - Overload Duration (Sec) _____
- Input Voltage (Volts) _____
  (VAC-RMS for Single Phase, VAC-RMS line-to-line for Three-Phase)
- Line Frequency: ☐ 50 Hertz or ☐ 60 Hertz Other _____ Hz

(3) Environmental Parameters:

- Maximum Ambient Temperature (°C) _____
- Humidity (0-95% Non-Condensing): _____
- Maximum Altitude (feet above sea level): _____ ft

Please email this information to our IPP Department at ipp@pwrx.com.
A Powerex engineer will review the information and contact you to discuss your assembly needs.

PA Numbering System

PAA6T6200620 is a 600 Volt disc based, Three-Phasse AC Assembly.

PA	A6	T620	06	20
(1,2)	(3,4)	(5,6,7,8)	(9,10)	(11,12)

(1,2) Circuit Code:

Rectifier	SCR	Half-Control	Full-Control

PA (AC Switch)
Powerex supplies the sink jumper (AC connection) on the PA air cooled assembly types only.

(3,4) Sink Code: Customer Specific

(5,6,7,8) Device Code: Application Specific

(9,10) Voltage Code:

02 = 200
04 = 400
06 = 600
08 = 800
10 = 1000
12 = 1200
14 = 1400
16 = 1600
18 = 1800
20 = 2000
22 = 2200
24 = 2400
26 = 2600
28 = 2800
30 = 3000

(11,12) Current Code: Device Specific

PD Assembly Overview

Powerex assemblies with the PD prefix are available in two varieties. PDA assemblies are disc-based assemblies and PDB assemblies are module-based assemblies.

Fans are not included as part of the standard assembly.

If your application requirements do not allow the selection of a standard assembly, as listed on pages J-6 through J-11, then to determine the proper assembly for your application, the following information is needed:

(1) Choose the Circuit Type:

Single-Phase Bridge

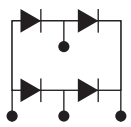

Single-Phase Half Controlled Bridge

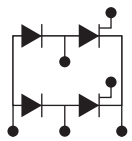

Single-Phase Full Controlled Bridge

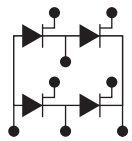

Three-Phase Bridge

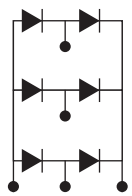

Three-Phase Half Controlled Bridge

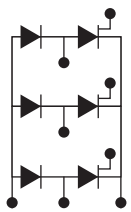

Three-Phase Full Controlled Bridge

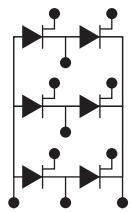

(2) Electrical Parameters:

- Maximum Continuous Output Current (Amps) _____
  Maximum Overload
  - Output DC Current (Amps) _____
  - Overload Duration (Sec) _____
- Input Voltage (Volts) _____
  (VAC-RMS for Single Phase, VAC-RMS line-to-line for Three-Phase)
- Line Frequency: ☐ 50 Hertz or ☐ 60 Hertz Other _____ Hz

(3) Environmental Parameters:

- Maximum Ambient Temperature (°C) _____
- Humidity (0-95% Non-Condensing): _____
- Maximum Altitude (feet above sea level): _____ ft

Please email this information to our IPP Department at ipp@pwrx.com.
A Powerex engineer will review the information and contact you to discuss your assembly needs.

PD Numbering System

PDA9T9R92210 is a 2200 Volt, Air Cooled Doubler Assembly.

PDA9 T9R9 22 10

(1,2) (3,4) (5,6,7,8) (9,10) (11,12)

(1,2) Circuit Code:

Rectifier | SCR | Half-Control | Full-Control

PC (Positive Centertap – Common Cathode Connection)

PD (Doubler Assemblies)
Remember to check the number of assemblies required for your circuit configuration.

PN (Negative Centertap – Common Anode Connection)

PP (Parallel Connection)
Connections available as Special Purpose Assemblies with selected device matching negotiated with Powerex application engineers.

PR (Single Assemblies)
Remember to check the number of assemblies required for your circuit configuration.

PS (Series Connection)
Connections available as Special Purpose Assemblies with the following options: device selection and matching; chill blocks and fittings (targets); disc clamp designs with additional spring deflection and additional voltage capabilities, corona (CIV, CEV) and Hipot testing, balancing capacitors, resistors.

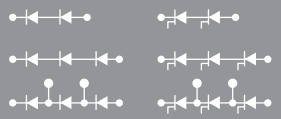

PT (Single Assemblies)
Remember to check the number of assemblies required for your circuit configuration.

(3,4) Sink Code: Customer Specific

(5,6,7,8) Device Code: Application Specific

(9,10) Voltage Code:

- 02 = 200
- 04 = 400
- 06 = 600
- 08 = 800
- 10 = 1000
- 12 = 1200
- 14 = 1400
- 16 = 1600
- 18 = 1800
- 20 = 2000
- 22 = 2200
- 24 = 2400
- 26 = 2600
- 28 = 2800
- 30 = 3000

(11,12) Current Code: Device Specific

Three-Phase AC Switch
Discs, Hockey Puks

Part Number	Voltage	Output Current A_{rms} Amperes	Package Size (inches)	Quantity Required for 3-Phase Circuit	Ambient Temperature (°C)	Inlet Air Velocity (LFM)	Approximate Weight (lbs)	Approximate Weight (kgs)	Outline Drawings Number	Outline Drawings Page
PAA6T6200620*	600	400	13.125 x 5.75 x 5.75	3	50	1000	12.8	5.8	1	J-12
PAA6T6201220*	1200	400	13.125 x 5.75 x 5.75	3	50	1000	12.8	5.8	1	J-12
PAA6T6201620*	1600	400	13.125 x 5.75 x 5.75	3	50	1000	12.8	5.8	1	J-12
PAA7T7200645*	600	600	13.125 x 5.625 x 6.25	3	50	1000	13.7	6.2	2	J-12
PAA7T7201245*	1200	600	13.125 x 5.625 x 6.25	3	50	1000	13.7	6.2	2	J-12
PAA7T7201645*	1600	600	13.125 x 5.625 x 6.25	3	50	1000	13.7	6.2	2	J-12
PAA7T7200655*	600	700	13.125 x 5.625 x 6.25	3	50	1000	13.7	6.2	2	J-12
PAA7T7201255*	1200	700	13.125 x 5.625 x 6.25	3	50	1000	13.7	6.2	2	J-12
PAA7T7201655*	1600	700	13.125 x 5.625 x 6.25	3	50	1000	13.7	6.2	2	J-12
PAA7T7S00675*	600	800	13.125 x 5.625 x 5.80	3	50	1000	12.8	5.8	3	J-13
PAA7T7S01275*	1200	800	13.125 x 5.625 x 5.80	3	50	1000	12.8	5.8	3	J-13
PAA7T7S01675*	1600	800	13.125 x 5.625 x 5.80	3	50	1000	12.8	5.8	3	J-13
PAA9T9G00610*	600	1350	17.125 x 9.938 x 6.44	3	50	1000	45.0	20.4	4	J-13
PAA9T9G01210*	1200	1350	17.125 x 9.938 x 6.44	3	50	1000	45.0	20.4	4	J-13
PAA9T9G01610*	1600	1350	17.125 x 9.938 x 6.44	3	50	1000	45.0	20.4	4	J-13
PAA9T9G00612*	600	1700	17.125 x 9.938 x 6.44	3	50	1000	45.0	20.4	4	J-13
PAA9T9G01212*	1200	1700	17.125 x 9.938 x 6.44	3	50	1000	45.0	20.4	4	J-13
PAA9T9G01612*	1600	1700	17.125 x 9.938 x 6.44	3	50	1000	45.0	20.4	4	J-13
PAAATA200616*	600	2100	21.12 x 12.69 x 7.84	3	50	1000	86.4	39.2	5	J-14
PAAATA201216*	1200	2100	21.12 x 12.69 x 7.84	3	50	1000	86.4	39.2	5	J-14
PAAATA201616*	1600	2100	21.12 x 12.69 x 7.84	3	50	1000	86.4	39.2	5	J-14
PAAATA200618*	600	2500	21.12 x 12.69 x 7.84	3	50	1000	86.4	39.2	5	J-14
PAAATA201218*	1200	2500	21.12 x 12.69 x 7.84	3	50	1000	86.4	39.2	5	J-14
PAAATA201618*	1600	2500	21.12 x 12.69 x 7.84	3	50	1000	86.4	39.2	5	J-14

Part number represents a single-phase assembly, you will need three assemblies to complete a three-phase circuit.

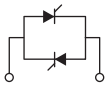

Single-Phase Assembly –
(3 Required for Three-Phase Circuit)

Three-Phase AC Switch
Isolated Modules

Part Number	Voltage	Output Current A_{rms} Amperes	Package Size (inches)	Quantity Required for 3-Phase Circuit	Ambient Temperature (°C)	Inlet Air Velocity (LFM)	Approximate Weight (lbs)	(kgs)	Outline Drawings Number	Page
PAB1CD430890	800	100	6.00 x 4.92 x 7.00	1	50	800	6.8	3.1	6	J-14
PAB1CD431290	1200	100	6.00 x 4.92 x 7.00	1	50	800	6.8	3.1	6	J-14
PAB1CD431690	1600	100	6.00 x 4.92 x 7.00	1	50	800	6.8	3.1	6	J-14
PAB2CD630815	800	150	9.00 x 4.92 x 7.00	1	50	800	11.0	5.0	8	J-15
PAB2CD631215	1200	150	9.00 x 4.92 x 7.00	1	50	800	11.0	5.0	8	J-15
PAB2CD631615	1600	150	9.00 x 4.92 x 7.00	1	50	800	11.0	5.0	8	J-15
PAB3ND430825	800	200	12.00 x 4.92 x 8.00	1	50	800	18.75	8.5	10	J-16
PAB3ND431225	1200	200	12.00 x 4.92 x 8.00	1	50	800	18.75	8.5	10	J-16
PAB3ND431625	1600	200	12.00 x 4.92 x 8.00	1	50	800	18.75	8.5	10	J-16
PAB2LD430850*	800	300	9.00 x 4.92 x 8.00	3	50	800	12.5	5.6	12	J-16
PAB2LD431250*	1200	300	9.00 x 4.92 x 8.00	3	50	800	12.5	5.6	12	J-16
PAB2LD431650*	1600	300	9.00 x 4.92 x 8.00	3	50	800	12.5	5.6	12	J-16

Part number represents a single-phase assembly, you will need three assemblies to complete a three-phase circuit.

PAB1CD430890, PAB1CD431290, PAB1CD431690, PAB2CD630815,PAB2CD631215, PAB2CD631615, PAB3ND430825, PAB3ND431225, PAB3ND431625

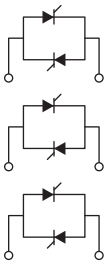

PAB2LD430850, PAB2LD431250, PAB2LD431650

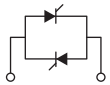

Single-Phase Assembly –
(3 Required for Three-Phase Circuit)

Three-Phase DC Rectifier
Discs, Hockey Puks

Part Number	Voltage	Output Current A_{DC} Amperes	Package Size (inches)	Quantity Required for 3-Phase Circuit	Ambient Temperature (°C)	Inlet Air Velocity (LFM)	Approximate Weight (lbs)	Approximate Weight (kgs)	Outline Drawings Number	Outline Drawings Page
PDA6R6200630*	600	850	13.125 x 5.75 x 5.75	3	50	1000	12.8	5.8	1	J-12
PDA6R6201230*	1200	850	13.125 x 5.75 x 5.75	3	50	1000	12.8	5.8	1	J-12
PDA6R6201630*	1600	850	13.125 x 5.75 x 5.75	3	50	1000	12.8	5.8	1	J-12
PDA7R7S00608*	600	1200	13.125 x 5.625 x 5.80	3	50	1000	12.8	5.8	3	J-13
PDA7R7S01208*	1200	1200	13.125 x 5.625 x 5.80	3	50	1000	12.8	5.8	3	J-13
PDA7R7S01608*	1600	1200	13.125 x 5.625 x 5.80	3	50	1000	12.8	5.8	3	J-13
PDA7R7S00612*	600	1650	13.125 x 5.625 x 5.80	3	50	1000	12.8	5.8	3	J-13
PDA7R7S01212*	1200	1650	13.125 x 5.625 x 5.80	3	50	1000	12.8	5.8	3	J-13
PDA7R7S01612*	1600	1650	13.125 x 5.625 x 5.80	3	50	1000	12.8	5.8	3	J-13
PDA7R7S00616*	600	2450	13.125 x 5.625 x 5.80	3	50	1000	12.8	5.8	3	J-13
PDA7R7S01216*	1200	2450	13.125 x 5.625 x 5.80	3	50	1000	12.8	5.8	3	J-13
PDA7R7S01616*	1600	2450	13.125 x 5.625 x 5.80	3	50	1000	12.8	5.8	3	J-13
PDA9R9G00612*	600	2700	17.125 x 9.938 x 6.44	3	50	1000	45.0	20.4	4	J-13
PDA9R9G01212*	1200	2700	17.125 x 9.938 x 6.44	3	50	1000	45.0	20.4	4	J-13
PDA9R9G01612*	1600	2700	17.125 x 9.938 x 6.44	3	50	1000	45.0	20.4	4	J-13
PDA9R9G00618*	600	3300	17.125 x 9.938 x 6.44	3	50	1000	45.0	20.4	4	J-13
PDA9R9G01218*	1200	3300	17.125 x 9.938 x 6.44	3	50	1000	45.0	20.4	4	J-13
PDA9R9G01618*	1600	3300	17.125 x 9.938 x 6.44	3	50	1000	45.0	20.4	4	J-13
PDA9R9G00622*	600	4500	17.125 x 9.938 x 6.44	3	50	1000	45.0	20.4	4	J-13
PDA9R9G01222*	1200	4500	17.125 x 9.938 x 6.44	3	50	1000	45.0	20.4	4	J-13
PDA9R9G01622*	1600	4500	17.125 x 9.938 x 6.44	3	50	1000	45.0	20.4	4	J-13
PDAARA200636*	600	5800	21.12 x 12.69 x 7.84	3	50	1000	86.4	39.2	5	J-14
PDAARA201236*	1200	5800	21.12 x 12.69 x 7.84	3	50	1000	86.4	39.2	5	J-14
PDAARA201636*	1600	5800	21.12 x 12.69 x 7.84	3	50	1000	86.4	39.2	5	J-14

Part number represents a single-phase assembly, you will need three assemblies to complete a three-phase circuit.

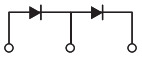

Single-Phase Assembly –
(3 Required for Three-Phase Circuit)

Three-Phase DC Rectifier
Isolated Modules

Part Number	Voltage	Output Current A_{DC} Amperes	Package Size (inches)	Quantity Required for 3-Phase Circuit	Ambient Temperature (°C)	Inlet Air Velocity (LFM)	Approximate Weight (lbs)	(kgs)	Outline Drawings Number	Page
PDB1CD410899	800	150	6.00 x 4.92 x 7.00	1	50	800	6.8	3.1	7	J-15
PDB1CD411299	1200	150	6.00 x 4.92 x 7.00	1	50	800	6.8	3.1	7	J-15
PDB1CD411699	1600	150	6.00 x 4.92 x 7.00	1	50	800	6.8	3.1	7	J-15
PDB2CD610816	800	200	9.00 x 4.92 x 7.00	1	50	800	11.0	5.0	9	J-15
PDB2CD611216	1200	200	9.00 x 4.92 x 7.00	1	50	800	11.0	5.0	9	J-15
PDB2CD611616	1600	200	9.00 x 4.92 x 7.00	1	50	800	11.0	5.0	9	J-15
PDB3ND410826	800	300	15.00 x 4.92 x 8.00	1	50	800	18.75	8.5	11	J-16
PDB3ND411226	1200	300	15.00 x 4.92 x 8.00	1	50	800	18.75	8.5	11	J-16
PDB3ND411626	1600	300	15.00 x 4.92 x 8.00	1	50	800	18.75	8.5	11	J-16
PDB2LD410860*	800	450	9.00 x 4.92 x 8.00	3	50	800	12.5	5.6	12	J-16
PDB2LD411260*	1200	450	9.00 x 4.92 x 8.00	3	50	800	12.5	5.6	12	J-16
PDB2LD411660*	1600	450	9.00 x 4.92 x 8.00	3	50	800	12.5	5.6	12	J-16

Part number represents a single-phase assembly, you will need three assemblies to complete a three-phase circuit.

PDB1CD410899, PDB1CD411299, PDB1CD411699, PDB2CD610816, PDB2CD611216, PDB2CD611616, PDB3ND410826, PDB3ND411226, PDB3ND411626

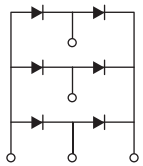

PDB2LD410860, PDB2LD411260, PDB2LD411660

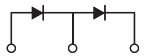

Single Phase Assembly –
(3 Required for Three-Phase Circuit)

Three-Phase Half Controlled Rectifier
Discs, Hockey Puks

Part Number	Voltage	Output Current A_{DC} Amperes	Package Size (inches)	Quantity Required for 3-Phase Circuit	Ambient Temperature (°C)	Inlet Air Velocity (LFM)	Approximate Weight (lbs)	Approximate Weight (kgs)	Outline Drawings Number	Outline Drawings Page
PDA6T6R60620*	600	500	13.125 x 5.75 x 5.75	3	50	1000	12.8	5.8	1	J-12
PDA6T6R61220*	1200	500	13.125 x 5.75 x 5.75	3	50	1000	12.8	5.8	1	J-12
PDA6T6R61620*	1600	500	13.125 x 5.75 x 5.75	3	50	1000	12.8	5.8	1	J-12
PDA6T6R60630*	600	600	13.125 x 5.75 x 5.75	3	50	1000	12.8	5.8	1	J-12
PDA6T6R61230*	1200	600	13.125 x 5.75 x 5.75	3	50	1000	12.8	5.8	1	J-12
PDA6T6R61630*	1600	600	13.125 x 5.75 x 5.75	3	50	1000	12.8	5.8	1	J-12
PDA7T7R70645*	600	800	13.125 x 5.625 x 6.25	3	50	1000	13.7	6.2	2	J-12
PDA7T7R71245*	1200	800	13.125 x 5.625 x 6.25	3	50	1000	13.7	6.2	2	J-12
PDA7T7R71645*	1600	800	13.125 x 5.625 x 6.25	3	50	1000	13.7	6.2	2	J-12
PDA7TSRS0665*	600	950	13.125 x 5.625 x 5.80	3	50	1000	12.8	5.8	3	J-13
PDA7TSRS1265*	1200	950	13.125 x 5.625 x 5.80	3	50	1000	12.8	5.8	3	J-13
PDA7TSRS1665*	1600	950	13.125 x 5.625 x 5.80	3	50	1000	12.8	5.8	3	J-13
PDA7TSRS0675*	600	1000	13.125 x 5.625 x 5.80	3	50	1000	12.8	5.8	3	J-13
PDA7TSRS1275*	1200	1000	13.125 x 5.625 x 5.80	3	50	1000	12.8	5.8	3	J-13
PDA7TSRS1675*	1600	1000	13.125 x 5.625 x 5.80	3	50	1000	12.8	5.8	3	J-13
PDA9T9R90610*	600	1750	17.125 x 9.938 x 6.44	3	50	1000	45.0	20.4	4	J-13
PDA9T9R91210*	1200	1750	17.125 x 9.938 x 6.44	3	50	1000	45.0	20.4	4	J-13
PDA9T9R91610*	1600	1750	17.125 x 9.938 x 6.44	3	50	1000	45.0	20.4	4	J-13
PDA9T9R90612*	600	2200	17.125 x 9.938 x 6.44	3	50	1000	45.0	20.4	4	J-13
PDA9T9R91212*	1200	2200	17.125 x 9.938 x 6.44	3	50	1000	45.0	20.4	4	J-13
PDA9T9R91612*	1600	2200	17.125 x 9.938 x 6.44	3	50	1000	45.0	20.4	4	J-13
PDAATARA0618*	600	3300	21.12 x 12.69 x 7.84	3	50	1000	86.4	39.2	5	J-14
PDAATARA1218*	1200	3300	21.12 x 12.69 x 7.84	3	50	1000	86.4	39.2	5	J-14
PDAATARA1618*	1600	3300	21.12 x 12.69 x 7.84	3	50	1000	86.4	39.2	5	J-14

Part number represents a single-phase assembly, you will need three assemblies to complete a three-phase circuit.

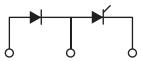

Single-Phase Assembly –
(3 Required for Three-Phase Circuit)

Three-Phase Half Controlled Rectifier
Isolated Modules

Part Number	Voltage	Output Current A_{DC} Amperes	Package Size (inches)	Quantity Required for 3-Phase Circuit	Ambient Temperature (°C)	Inlet Air Velocity (LFM)	Approximate Weight (lbs)	(kgs)	Outline Drawings Number	Page
PDB1CD420890	800	150	6.00 x 4.92 x 7.00	1	50	800	6.8	3.1	7	J-15
PDB1CD421290	1200	150	6.00 x 4.92 x 7.00	1	50	800	6.8	3.1	7	J-15
PDB1CD421690	1600	150	6.00 x 4.92 x 7.00	1	50	800	6.8	3.1	7	J-15
PDB2CD620815	800	200	9.00 x 4.92 x 7.00	1	50	800	11.0	5.0	9	J-15
PDB2CD621215	1200	200	9.00 x 4.92 x 7.00	1	50	800	11.0	5.0	9	J-15
PDB2CD621615	1600	200	9.00 x 4.92 x 7.00	1	50	800	11.0	5.0	9	J-15
PDB3ND420825	800	300	15.00 x 4.92 x 8.00	1	50	800	18.75	8.5	11	J-16
PDB3ND421225	1200	300	15.00 x 4.92 x 8.00	1	50	800	18.75	8.5	11	J-16
PDB3ND421625	1600	300	15.00 x 4.92 x 8.00	1	50	800	18.75	8.5	11	J-16
PDB2LD420850*	800	450	9.00 x 4.92 x 8.00	3	50	800	12.5	5.6	12	J-16
PDB2LD421250*	1200	450	9.00 x 4.92 x 8.00	3	50	800	12.5	5.6	12	J-16
PDB2LD421650*	1600	450	9.00 x 4.92 x 8.00	3	50	800	12.5	5.6	12	J-16

Part number represents a single-phase assembly, you will need three assemblies to complete a three-phase circuit.

PDB1CD420890, PDB1CD421290, PDB1CD421690, PDB2CD620815, PDB2CD621215, PDB2CD621615, PDB3ND420825, PDB3ND421225, PDB3ND421625

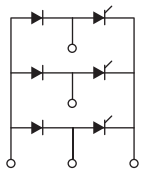

PDB2LD420850, PDB2LD421250, PDB2LD421650

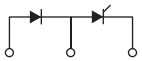

Single-Phase Assembly –
(3 Required for Three-Phase Circuit)

Three-Phase Full Controlled Rectifier
Discs, Hockey Puks

Part Number	Voltage	Output Current A_{DC} Amperes	Package Size (inches)	Quantity Required for 3-Phase Circuit	Ambient Temperature (°C)	Inlet Air Velocity (LFM)	Approximate Weight (lbs)	Approximate Weight (kgs)	Outline Drawings Number	Outline Drawings Page
PDA6T6200620*	600	500	13.125 x 5.75 x 5.75	3	50	1000	12.8	5.8	1	J-12
PDA6T6201220*	1200	500	13.125 x 5.75 x 5.75	3	50	1000	12.8	5.8	1	J-12
PDA6T6201620*	1600	500	13.125 x 5.75 x 5.75	3	50	1000	12.8	5.8	1	J-12
PDA6T6200630*	600	600	13.125 x 5.75 x 5.75	3	50	1000	12.8	5.8	1	J-12
PDA6T6201230*	1200	600	13.125 x 5.75 x 5.75	3	50	1000	12.8	5.8	1	J-12
PDA6T6201630*	1600	600	13.125 x 5.75 x 5.75	3	50	1000	12.8	5.8	1	J-12
PDA7T7200645*	600	800	13.125 x 5.625 x 6.25	3	50	1000	13.7	6.2	2	J-12
PDA7T7201245*	1200	800	13.125 x 5.625 x 6.25	3	50	1000	13.7	6.2	2	J-12
PDA7T7201645*	1600	800	13.125 x 5.625 x 6.25	3	50	1000	13.7	6.2	2	J-12
PDA7T7S00665*	600	950	13.125 x 5.625 x 5.80	3	50	1000	12.8	5.8	3	J-13
PDA7T7S01265*	1200	950	13.125 x 5.625 x 5.80	3	50	1000	12.8	5.8	3	J-13
PDA7T7S01665*	1600	950	13.125 x 5.625 x 5.80	3	50	1000	12.8	5.8	3	J-13
PDA7T7S00675*	600	1000	13.125 x 5.625 x 5.80	3	50	1000	12.8	5.8	3	J-13
PDA7T7S01275*	1200	1000	13.125 x 5.625 x 5.80	3	50	1000	12.8	5.8	3	J-13
PDA7T7S01675*	1600	1000	13.125 x 5.625 x 5.80	3	50	1000	12.8	5.8	3	J-13
PDA9T9G00610*	600	1750	17.125 x 9.938 x 6.44	3	50	1000	45.0	20.4	4	J-13
PDA9T9G01210*	1200	1750	17.125 x 9.938 x 6.44	3	50	1000	45.0	20.4	4	J-13
PDA9T9G01610*	1600	1750	17.125 x 9.938 x 6.44	3	50	1000	45.0	20.4	4	J-13
PDA9T9G00612*	600	2200	17.125 x 9.938 x 6.44	3	50	1000	45.0	20.4	4	J-13
PDA9T9G01212*	1200	2200	17.125 x 9.938 x 6.44	3	50	1000	45.0	20.4	4	J-13
PDA9T9G01612*	1600	2200	17.125 x 9.938 x 6.44	3	50	1000	45.0	20.4	4	J-13
PDAATA200618*	600	3300	21.12 x 12.69 x 7.84	3	50	1000	86.4	39.2	5	J-14
PDAATA201218*	1200	3300	21.12 x 12.69 x 7.84	3	50	1000	86.4	39.2	5	J-14
PDAATA201618*	1600	3300	21.12 x 12.69 x 7.84	3	50	1000	86.4	39.2	5	J-14

Part number represents a single-phase assembly, you will need three assemblies to complete a three-phase circuit.

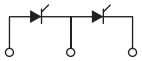

Single-Phase Assembly –
(3 Required for Three-Phase Circuit)

Three-Phase Full Controlled Rectifier

Isolated Modules

Part Number	Voltage	Output Current A_{DC} Amperes	Package Size (inches)	Quantity Required for 3-Phase Circuit	Ambient Temperature (°C)	Inlet Air Velocity (LFM)	Approximate Weight (lbs)	(kgs)	Outline Drawings Number	Page
PDB1CD430890	800	150	6.00 x 4.92 x 7.00	1	50	800	6.8	3.1	7	J-15
PDB1CD431290	1200	150	6.00 x 4.92 x 7.00	1	50	800	6.8	3.1	7	J-15
PDB1CD431690	1600	150	6.00 x 4.92 x 7.00	1	50	800	6.8	3.1	7	J-15
PDB2CD630815	800	200	9.00 x 4.92 x 7.00	1	50	800	11.0	5.0	9	J-15
PDB2CD631215	1200	200	9.00 x 4.92 x 7.00	1	50	800	11.0	5.0	9	J-15
PDB2CD631615	1600	200	9.00 x 4.92 x 7.00	1	50	800	11.0	5.0	9	J-15
PDB3ND430625	600	300	15.00 x 4.92 x 8.00	1	50	800	18.75	8.5	11	J-16
PDB3ND431225	1200	300	15.00 x 4.92 x 8.00	1	50	800	18.75	8.5	11	J-16
PDB3ND431625	1600	300	15.00 x 4.92 x 8.00	1	50	800	18.75	8.5	11	J-16
PDB2LD430850*	800	450	9.00 x 4.92 x 8.00	3	50	800	12.5	5.6	12	J-16
PDB2LD431250*	1200	450	9.00 x 4.92 x 8.00	3	50	800	12.5	5.6	12	J-16
PDB2LD431650*	1600	450	9.00 x 4.92 x 8.00	3	50	800	12.5	5.6	12	J-16

Part number represents a single-phase assembly, you will need three assemblies to complete a three-phase circuit.

PDB1CD430890, PDB1CD431290, PDB1CD431690,
PDB2CD630815, PDB2CD631215, PDB2CD631615,
PDB3ND430625, PDB3ND431225, PDB3ND431625

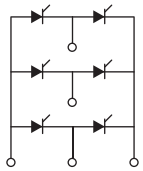

PDB2LD430850, PDB2LD431250, PDB2LD431650

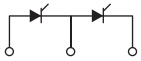

Single-Phase Assembly –
(3 Required for Three-Phase Circuit)

1 PAA6T6200620, PAA6T6201220, PAA6T6201620, PDA6R6200630, PDA6R6201230, PDA6R6201630, PDA6T6200620, PDA6T6200630, PDA6T6201220, PDA6T6201230, PDA6T6201620, PDA6T6201630, PDA6T6R60620, PDA6T6R60630, PDA6T6R61220, PDA6T6R61230, PDA6T6R61620, PDA6T6R61630

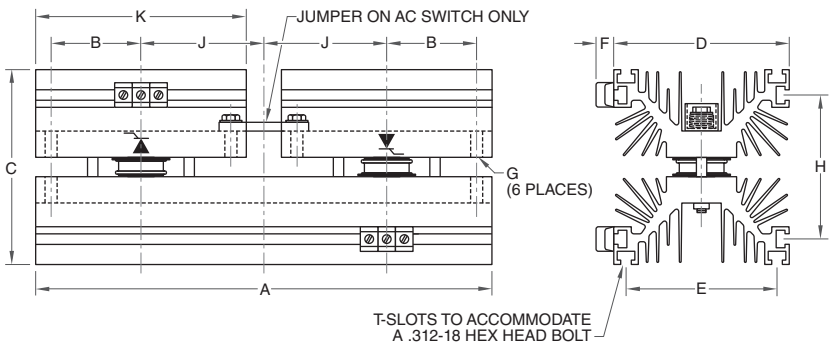

Dim.	Inches	Millimeters
A	13.06 Max.	331.72 Max.
B	2.56	65.0
C	5.60 Max.	142.24 Max.
D	5.06 Max.	128.52 Max.
E	4.25 Ref.	107.9 Ref.
F	0.5 Ref.	12.7 Ref.
G	0.344 Dia.	8.75 Dia.
H	4.10 Ref.	104.14 Ref.
J	3.5 Ref.	88.9 Ref.
K	6.0 Ref.	152.4 Ref.

2 PAA7T7200645, PAA7T7200655, PAA7T7201245, PAA7T7201255, PAA7T7201645, PAA7T7201655, PDA7T7200645, PDA7T7201245, PDA7T7201645 , PDA7T7R70645, PDA7T7R71245, PDA7T7R71645

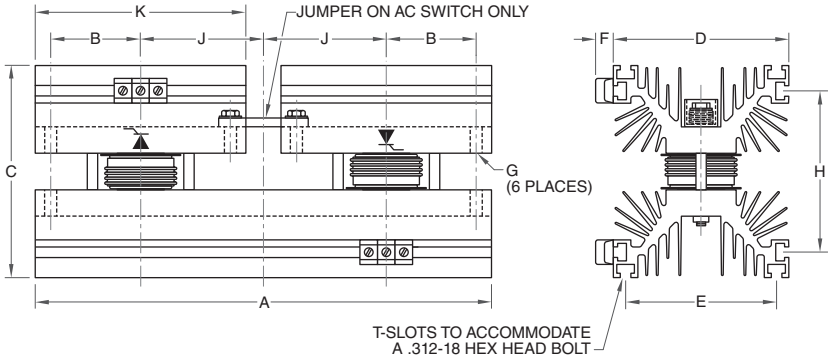

Dim.	Inches	Millimeters
A	13.06 Max.	331.72 Max.
B	2.56	65.0
C	6.06 Max.	153.92 Max.
D	5.06 Max.	128.52 Max.
E	4.25 Ref.	107.9 Ref.
F	0.5 Ref.	12.7 Ref.
G	0.344 Dia.	8.75 Dia.
H	4.59 Ref.	116.58 Ref.
J	3.5 Ref.	88.9 Ref.
K	6.0 Ref.	152.4 Ref.

3

PAA7T7S00675, PAA7T7S01275, PAA7T7S01675, PDA7R7S00608, PDA7R7S00612, PDA7R7S00616, PDA7R7S01208, PDA7R7S01212, PDA7R7S01216, PDA7R7S01608, PDA7R7S01612, PDA7R7S01616, PDA7TSRS0665, PDA7TSRS0675, PDA7TSRS1265, PDA7TSRS1275, PDA7TSRS1665, PDA7TSRS1675, PDA7T7S00665, PDA7T7S00675, PDA7T7S01265, PDA7T7S01275, PDA7T7S01665, PDA7T7S01675

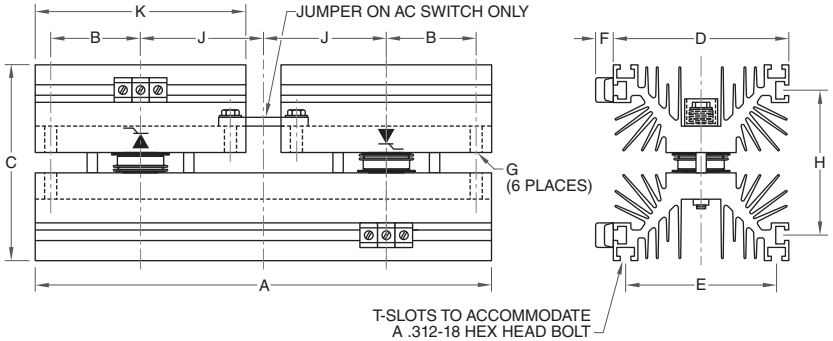

Dim.	Inches	Millimeters
A	13.06 Max.	331.72 Max.
B	2.56	65.0
C	5.64 Max.	143.26 Max.
D	5.06 Max.	128.52 Max.
E	4.25 Ref.	107.9 Ref.
F	0.5 Ref.	12.7 Ref.
G	0.344 Dia.	8.75 Dia.
H	4.13 Ref.	104.9 Ref.
J	3.5 Ref.	88.9 Ref.
K	6.0 Ref.	152.4 Ref.

4

PAA9T9G00610, PAA9T9G00612, PAA9T9G01210, PAA9T9G01212, PAA9T9G01610, PAA9T9G01612, PDA9R9G00612, PDA9R9G00618, PDA9R9G00622, PDA9R9G01212, PDA9R9G01218, PDA9R9G01222, PDA9R9G01612, PDA9R9G01618, PDA9R9G01622, PDA9T9G00610, PDA9T9G00612, PDA9T9G01210, PDA9T9G01212, PDA9T9G01610, PDA9T9G01612, PDA9T9R90610, PDA9T9R90612, PDA9T9R91210, PDA9T9R91212, PDA9T9R91610, PDA9T9R91612

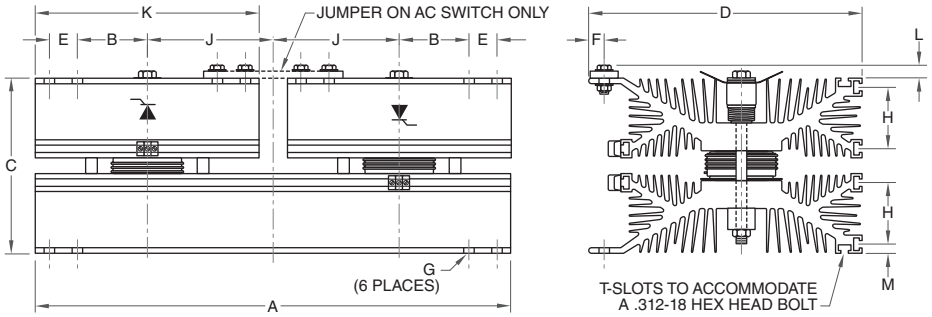

Dim.	Inches	Millimeters
A	17.06 Max.	433.32 Max.
B	2.5	63.5
C	6.3 Max.	160.02 Max.
D	9.86 Max.	250.95 Max.
E	1.0	25.4
F	0.75 Ref.	19.05 Ref.
G	0.375 Dia.	9.525 Dia.
H	2.16 Ref.	54.86 Ref.
J	4.5 Ref.	114.3 Ref.
K	8.0 Ref.	203.2 Ref.
L	0.5 Max.	12.7 Max.
M	0.33 Ref.	8.38 Ref.

5 PAAATA200616, PAAATA200618, PAAATA201216, PAAATA201218, PAAATA201616, PAAATA201618, PDAARA200636, PDAARA201236, PDAARA201636, PDAATARA0618, PDAATARA1218, PDAATARA1618, PDAATA200618, PDAATA201218, PDAATA201618

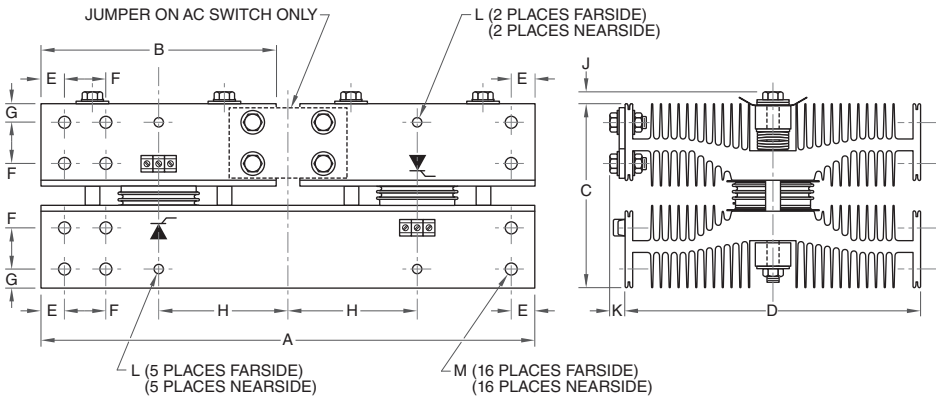

Dim.	Inches	Millimeters
A	21.06 Max.	534.92 Max.
B	10.0 Ref.	254.0 Ref.
C	7.89 Max.	200.4 Max.
D	12.69 Max.	322.33 Max.
E	1.0	25.4
F	1.75	44.45
G	0.81	20.57
H	5.50	139.7
J	0.58 Ref.	14.73 Ref.
K	0.65 Ref.	16.51 Ref.

6 PAB1CD430890, PAB1CD431290, PAB1CD431690

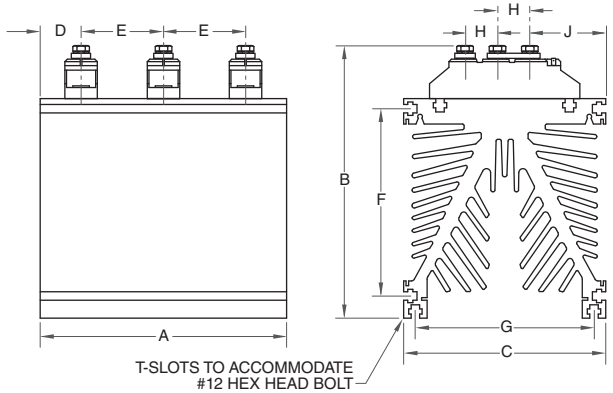

Dim.	Inches	Millimeters
A	6.0	152.5
B	7.0 Max.	177.83 Max.
C	4.92 Max.	125.0 Max.
D	1.0	25.4
E	2.0	50.8
F	4.53	115.06
G	4.33	109.98
H	0.79	20.07
J	1.5	31.1

7 PDB1CD410899, PDB1CD411299, PDB1CD411699, PDB1CD420890, PDB1CD421290, PDB1CD421690, PDB1CD430890, PDB1CD431290, PDB1CD431690

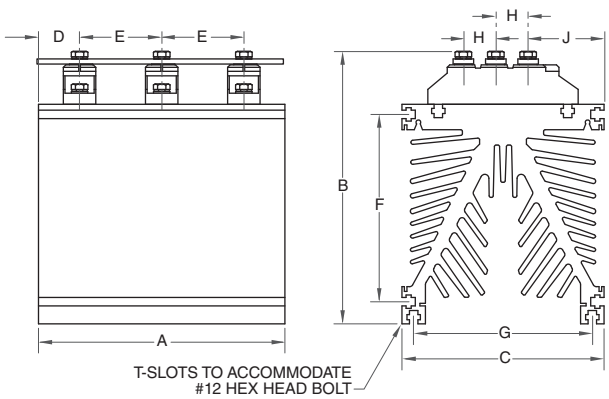

Dim.	Inches	Millimeters
A	6.0	152.5
B	7.0 Max.	177.83 Max.
C	4.92 Max.	125.0 Max.
D	1.0	25.4
E	2.0	50.8
F	4.53	115.06
G	4.33	109.98
H	0.79	20.07
J	1.5	31.1

8 PAB2CD630815, PAB2CD631215, PAB2CD631615

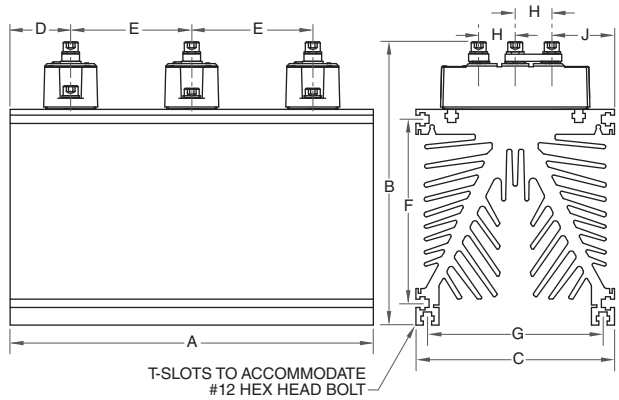

Dim.	Inches	Millimeters
A	9.0	228.6
B	7.0 Max.	177.83 Max.
C	4.92 Max.	125.0 Max.
D	1.5	31.1
E	3.0	76.2
F	4.53	115.06
G	4.33	109.98
H	0.91	23.11
J	1.56	39.62

9 PDB2CD610816, PDB2CD611216, PDB2CD611616, PDB2CD620815, PDB2CD621215, PDB2CD621615, PDB2CD630815, PDB2CD631215, PDB2CD631615

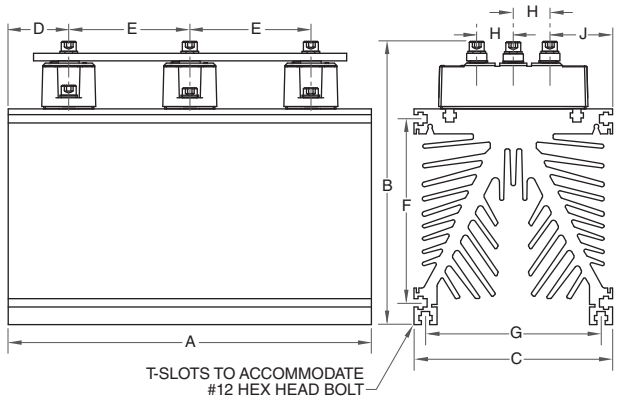

Dim.	Inches	Millimeters
A	9.0	228.6
B	7.0 Max.	177.83 Max.
C	4.92 Max.	125.0 Max.
D	1.5	31.1
E	3.0	76.2
F	4.53	115.06
G	4.33	109.98
H	0.91	23.11
J	1.56	39.62

10 PAB3ND430825, PAB3ND431225, PAB3ND431625

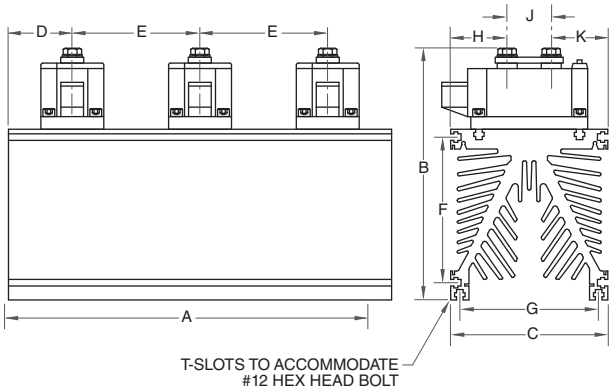

Dim.	Inches	Millimeters
A	12.0	304.8
B	8.0 Max.	203.2 Max.
C	4.92 Max.	125.0 Max.
D	2.0	50.8
E	4.0	101.6
F	4.53	115.06
G	4.33	109.98
H	1.7	43.18
J	1.38	35.05
K	1.77	44.96

11 PDB3ND410826, PDB3ND411226, PDB3ND411626, PDB3ND420825, PDB3ND421225, PDB3ND421625, PDB3ND430625, PDB3ND431225, PDB3ND431625

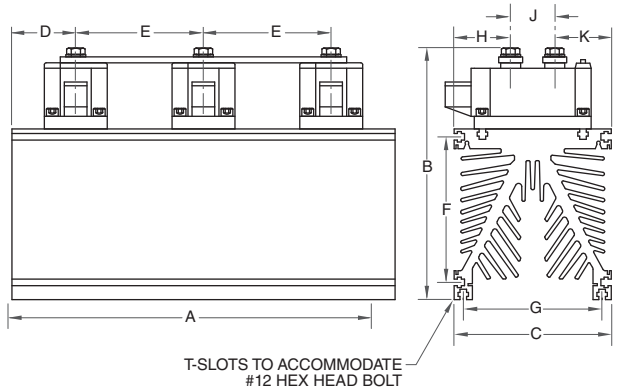

Dim.	Inches	Millimeters
A	12.0	304.8
B	8.0 Max.	203.2 Max.
C	4.92 Max.	125.0 Max.
D	2.0	50.8
E	4.0	101.6
F	4.53	115.06
G	4.33	109.98
H	1.7	43.18
J	1.38	35.05
K	1.77	44.96

12 PAB2LD430850, PAB2LD431250, PAB2LD431650, PDB2LD410860, PDB2LD411260, PDB2LD411660, PDB2LD420850, PDB2LD421250, PDB2LD421650, PDB2LD430850, PDB2LD431250, PDB2LD431650

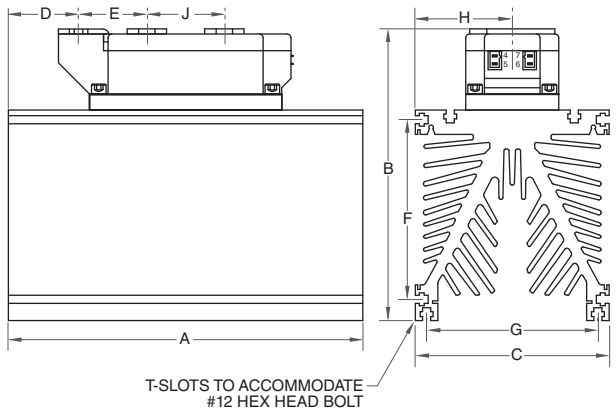

Dim.	Inches	Millimeters
A	9.0	228.6
B	8.0 Max.	203.2 Max.
C	4.92 Max.	125.0 Max.
D	1.78	45.21
E	1.73	43.94
F	4.53	115.06
G	4.33	109.98
H	2.46	62.48
J	1.97	50.04

MEDIUM VOLTAGE SCR & RECTIFIER ASSEMBLIES

Powerex is your source for Medium Voltage SCR and rectifier assemblies in a wide range of ratings and configurations.

Applications Include:

- Motor Controls - Medium Voltage Converters
  - SCR power bridges for solid state starters
  - SCR based input rectifiers
  - Crowbar systems for motor drives
- Wind Power (Alternative Energy)
  - Converters available as diodes or SCRs static var compensation
- Resistance Heating
- Inductive Heating - Input Rectifiers
- Load Commutated Inverter Power Section for Retrofits
- Uninterruptible Power Supplies - SCR Transfer Switches and Input Rectifiers
- Mining - SCR Power Bridges, Solid State Starters and Input Rectifiers
- Power Distribution - SCR Based Switches
- Thyristor Controlled Reactors

Powerex complements its rectifier products with IGBT assemblies for inverters, converters, choppers, and full or half wave bridge units. These assemblies can also be combined to provide a system-wide solution.

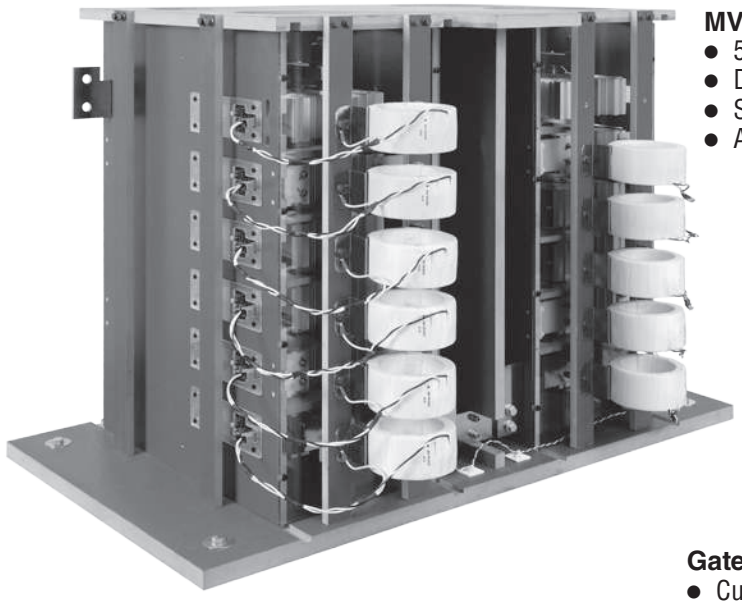

MV SCR Power Stack

- 5MW, 24kV SCR based power section
- Designed for low partial discharge (low corona)
- Scalable to other voltage and current ratings
- Air cooled, modular design

Gate Power Supply

- Current loop supplies power to all the SCR levels
- Provides excellent voltage isolation between SCRs and controls and also provides high BIL capability

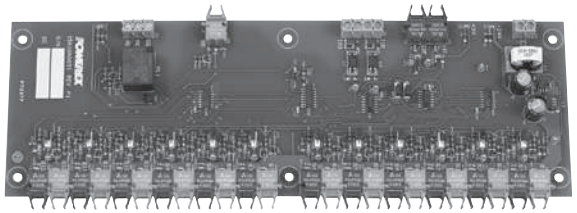

Fiber Optic Fan Out Board

- Receives SCR gate commands from external controller
- Fans out command to multiple level of SCRs
- Receives and processes feedback from gate boards

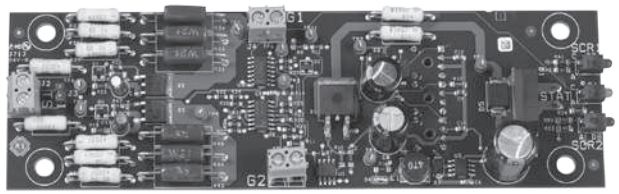

MV Fiber Optic SCR Gate Drive Board

- Receives and conditions power from an isolated loop power supply current transformer, allowing for high voltage isolation
- Provides fiber optic triggering of gates
- Provides fiber optic status feedback for temperature and power supply health monitoring

How to Select the Proper Assembly for Your Needs

Areas to consider when selecting the proper assembly.

Application: _____

Type of Circuit:

Single-Phase Bridge

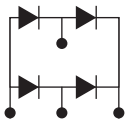

Single-Phase Half Controlled Bridge

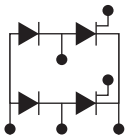

Single-Phase Full Controlled Bridge

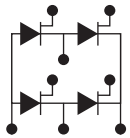

Three-Phase Bridge

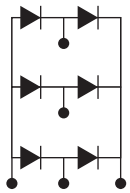

Three-Phase Half Controlled Bridge

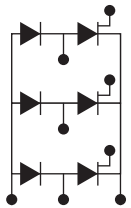

Three-Phase Full Controlled Bridge

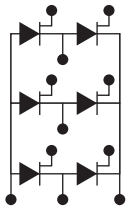

Power Topology: _____

Electrical parameters:

- Source MVA: _____
- Maximum Continuous Output Current (Amps): _____
- Maximum Overload:
  - Output DC Current (Amps): _____
  - Overload Duration (Sec): _____
- Input Voltage (Volts) _____
  (VAC-RMS for Single Phase, VAC-RMS line-to-line for Three-Phase)
- Line Frequency:
  ☐ 50 Hertz or ☐ 60 Hertz Other _____ Hz
- Distance to Source: _____
- Distance to Load: _____

Environmental Parameters:

- Maximum Ambient Temperature (°C): _____
- Humidity (0-95% Non-Condensing): _____
- Maximum Altitude (Feet Above Sea Level): _____ ft

Please email this information to our IPP Department at ipp@pwrx.com.
A Powerex engineer will review the information and contact you to discuss your assembly needs.

IGBT ASSEMBLIES

A leading supplier of IGBTs and other high power semiconductor applications, Powerex also produces POW-R-PAKs™, configurable IGBT power assemblies.

POW-R-PAK-GenII™
Powerex part numbers beginning with the prefix "NX" denote a GenII version of POW-R-PAK, which are recommended for new designs.

Applications Include:
- Distributed Power Generation
- Energy Storage
- Industrial Power Supplies
- Motor Drives
- Power Quality

Basic Circuit Configurations:
- Chopper
- Half-Bridge
- H-Bridge
- Three-Phase Bridge

Additional Available Options:
- Application Specific
- Blower/Fan
- Capacitor Banks

Note: Custom IGBT Assemblies Also Available

TABLE OF CONTENTS

Numbering System K-2
600V & 1200V 3-Phase Assemblies K-4
600V & 1200V H-Bridge Assemblies K-5
Outline Drawings K-6

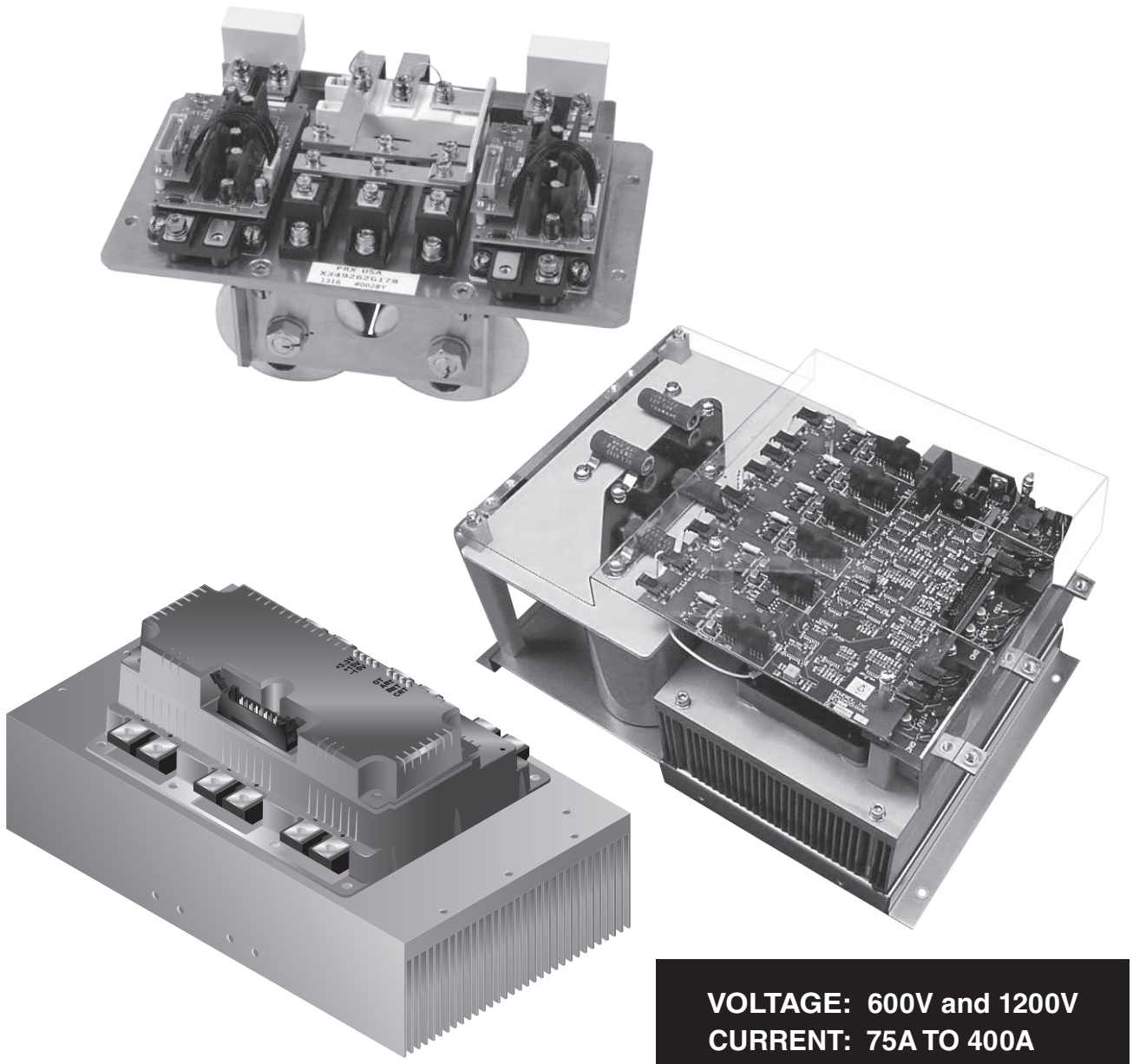

VOLTAGE: 600V and 1200V
CURRENT: 75A TO 400A

IGBT NX Series IGBT Assembly Overview

To help determine the proper IGBT assembly for your application, the following information is needed.

(1) Type NX Series IGBTs:

Air Cooled – Is a fan required?
Liquid Cooled – Type of liquid cooling: water or glycol.

(2) Power:

Single-Phase
Input (VDC) _____ Output (VAC) _____
Output Freq. _____ Output Current (AAC) _____

Three-Phase
Input (VDC) _____ Output (VAC) _____
Output Freq. _____ Output Current (AAC) _____

(3) Ambient Temperature (°C)

(4) Switching Frequency (kHz)

(5) Circuit Configuration:
Chopper H-Bridge
Half-Bridge Three-Phase Bridge

(6) Options:
Blower / Fan
Electrolytic Capacitors at 50 µfd/Amp
Film Capacitors at 20 µfd/Amp
No Cap Bank
Application Specific

(7) Assembly:
Prototype
Production - Estimated Annual Volume

Please email this information to our IPP Department at ipp@pwrx.com.
A Powerex engineer will review the information and contact you to discuss your assembly needs.

NX Numbering System*

NXD1K2A200A50-XX is a 200KVA IGBT air cooled half-bridge assembly using IGBTs rated at 1200 Volts AC.

NX D 1K2 A 200 A 50 – XX

(1) (2) (3)(4)(5) (6) (7)(8)(9) (10) (11)(12) (13)(14)

(1) Type:
NX = NX Series IPP Assembly

(2) Circuit Configuration:
H = Single Brake
D = Half-Bridge
B = H-Bridge
T = Three-Phase Bridge
R = Three-Phase + Brake
E = Chopper

(3)(4)(5) Voltage
001 to 999
1K0 to 9K9

i.e. 600 = 600V
i.e. 1K2 = 1200V
i.e. 1K7 = 1700V

(6) Voltage Type
A = AC (Active Front End)
D = DC

(7)(8)(9) KVA Rating
001 to 999
1K0 to 9K2

i.e. 200 = 200KVA
i.e. 1K2 = 1200KVA

(10) Thermal Management
A = Air Cooled
W = Liquid Cooled

(11)(12) Ambient Temperature
STD 40°C
Options 50°C
>50°C Consult Factory

(13)(14) Options
01 to 99

*Powerex is in the process of launching Gen II POW-R-PAK™ IGBT Assemblies. Powerex part numbers beginning with the prefix "NX" denote a Gen II version of POW-R-PAK, which are recommended for new designs.

IGBT PP Series IGBT Assembly Overview

To help determine the proper IGBT assembly for your application, the following information is needed.

(1) Type PP Series IGBTs:

Air Cooled – Is a fan required?
Liquid Cooled – Type of liquid cooling: water or glycol.

(2) Power:

Single-Phase
Input (VDC) _____ Output (VAC) _____
Output Freq. _____ Output Current (AAC) _____

Three-Phase
Input (VDC) _____ Output (VAC) _____
Output Freq. _____ Output Current (AAC) _____

(3) Ambient Temperature (°C)

(4) Switching Frequency (kHz)

(5) Circuit Configuration:
Chopper H-Bridge
Half-Bridge Three-Phase Bridge

(6) Options:
Blower / Fan
Electrolytic Capacitors at 50 µfd/Amp
Film Capacitors at 20 µfd/Amp
Application Specific

(7) Assembly:
Prototype
Production - Estimated Annual Volume

Please email this information to our IPP Department at ipp@pwrx.com.
A Powerex engineer will review the information and contact you to discuss your assembly needs.

PP Numbering System

PP400B060-ND is a 400A IGBT H-Bridge assembly using IGBTs rated at 600 Volts AC.

PP 400 B 060 – ND
(1) (2) (3) (4) (5)

(1) Type:
PP = PP Series IPP Assembly

(2) Amperes

(3) Circuit Configuration:
B = H-Bridge
T = 3-Phase

(4) Voltage
060 = 600V
120 = 1200V

(5) Factory Designation

600V and 1200V 3-Phase IGBT Assemblies,

(Refer to device datasheets at www.pwrx.com for test conditions.)

MAXIMUM RATINGS (IGBT Inverter Sector)				ELECTRICAL CHARACTERISTICS (IGBT Part)								THERMAL CHARACTERISTICS					
								Inductive Load Switching Times					IGBT	DIODES		Outline Drawings	
Type	V_{CES} Volts	I_C Amperes	V_{RMS} Isolation Volts	Typ. $V_{CE(SAT)}$ Volts	V_{EC} Volts	I_{CES} mA	$V_{CC(PROT)}$ Volts	$t_{d(on)}$ Ns	t_r Ns	$t_{d(off)}$ Ns	$t_{f(off)}$ Ns	$R_{th(c-f)}$ °C/W	$R_{th(j-c)}$ °C/W	$R_{th(j-c)}$ °C/W	Weight lbs	Number	Page
PP75T120-ND	1200	75	2500	2.4	3.8	1.0	900	100	50	400	300	0.19	0.22	0.29	24.4	1	K-6
PP150T120-ND	1200	150	2500	2.1	3.8	1.0	900	130	100	450	350	0.022	0.13	0.23	24.4	1	K-6
PP200T060-ND	600	200	2500	1.7	2.6	1.0	900	120	120	300	300	0.07	0.13	0.24	24.4	1	K-6
PP200T120-ND	1200	200	2500	3.0	3.8	1.0	900	130	100	450	350	0.022	0.093	0.17	24.4	1	K-6
PP300T060-ND	600	300	2500	3.0	3.8	1.0	400	550	190	600	350	0.02	0.066	0.12	24.4	1	K-6
PP300T120-ND	1200	300	2500	2.4	3.2	1.0	800	300	80	500	300	0.02	0.05	0.08	33.7	2	K-6

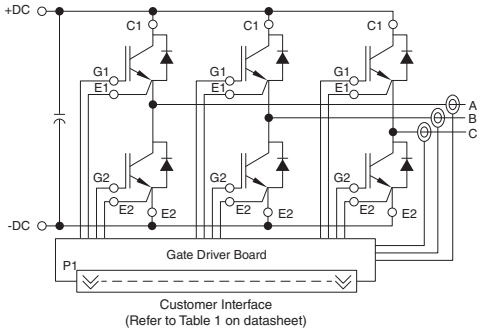

600V and 1200V H-Bridge IGBT Assemblies,

(Refer to device datasheets at www.pwrx.com for test conditions.)

MAXIMUM RATINGS (IGBT Inverter Sector)				ELECTRICAL CHARACTERISTICS (IGBT Part)								THERMAL CHARACTERISTICS					
								Inductive Load Switching Times					IGBT	DIODES		Outline Drawings	
Type	V_{CES} Volts	I_C Amperes	V_{RMS} Isolation Volts	Typ. $V_{CE(SAT)}$ Volts	V_{EC} Volts	I_{CES} mA	$V_{CC(PROT)}$ Volts	$t_{d(on)}$ Ns	t_r Ns	$t_{d(off)}$ Ns	$t_{f(off)}$ Ns	$R_{th(c-f)}$ °C/W	$R_{th(j-c)}$ °C/W	$R_{th(j-c)}$ °C/W	Weight lbs	Number	Page
PP100B120-ND	1200	100	2500	2.1	3.8	1.0	900	100	70	400	350	0.022	0.19	0.34	23	3	K-6
PP150B120-ND	1200	150	2500	2.1	3.8	1.0	900	120	120	300	300	0.022	0.13	0.23	23	3	K-6
PP200B120-ND	1200	200	2500	3.0	3.8	1.0	900	130	100	450	350	0.022	0.093	0.17	23	3	K-6
PP400B060-ND	600	400	2500	3.0	3.8	1.0	400	550	180	600	350	0.02	0.046	0.085	32	4	K-7

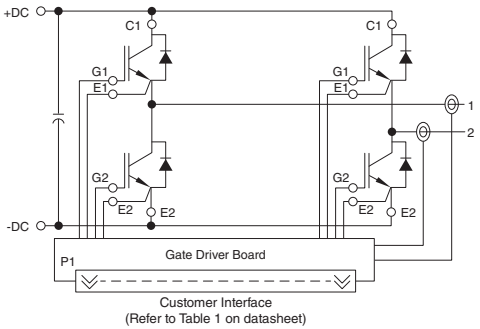

1 PP75T120-ND, PP150T120-ND, PP200T060-ND, PP200T120-ND, PP300T060-ND

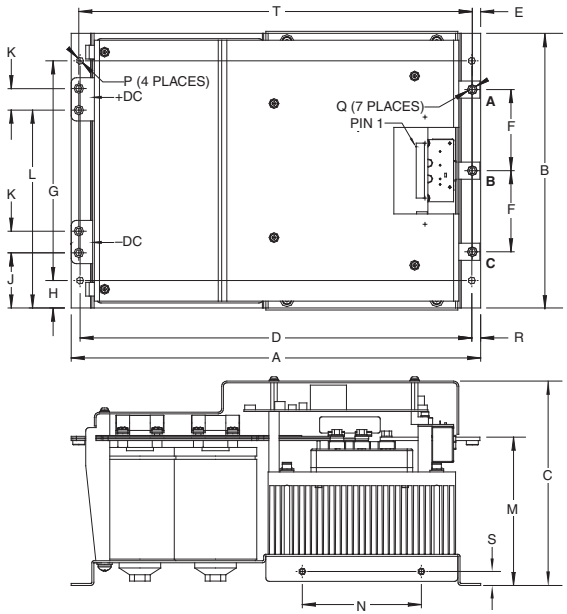

Dim.	Inches	Millimeters
A	14.9	378.4
B	10.15	257.8
C	7.4	193.0
D	14.25	362.0
E	0.3	7.7
F	2.95	75.0
G	8.0	203.2
H	1.0	25.4
J	2.01	51.0

Dim.	Inches	Millimeters
K	0.79	20.0
L	7.20	183.0
M	5.4	137.2
N	4.33	110.0
P	0.256 Dia.	6.5 Dia.
Q	M6 Metric	M6
R	0.32	8.2
S	0.51	12.9
T	14.32	363.6

2 PP300T120-ND

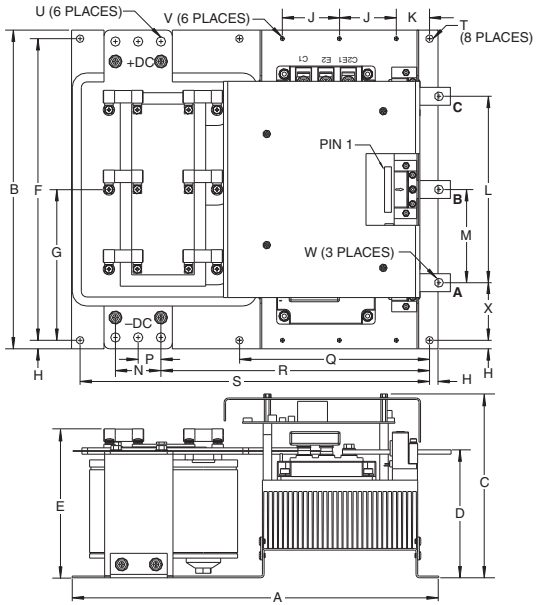

Dim.	Inches	Millimeters
A	16.1	408.9
B	14.0	355.6
C	8.1	205.1
D	5.62	142.7
E	6.54	166.1
F	13.25	336.6
G	6.63	168.3
H	0.38	9.5
J	2.5	63.5
K	1.46	37.1
L	8.19	208.0

Dim.	Inches	Millimeters
M	4.09	104.0
N	2.0	50.8
P	1.0	25.4
Q	8.35	212.09
R	11.8	299.7
S	15.35	389.9
T	0.335 Dia.	8.5 Dia.
U	0.413 Dia.	10.5 Dia.
V	M5 Metric	M5
W	0.394 Dia.	10.0 Dia.
X	2.53	64.3

3 PP100B120-ND, PP150B120-ND, PP200B120-ND

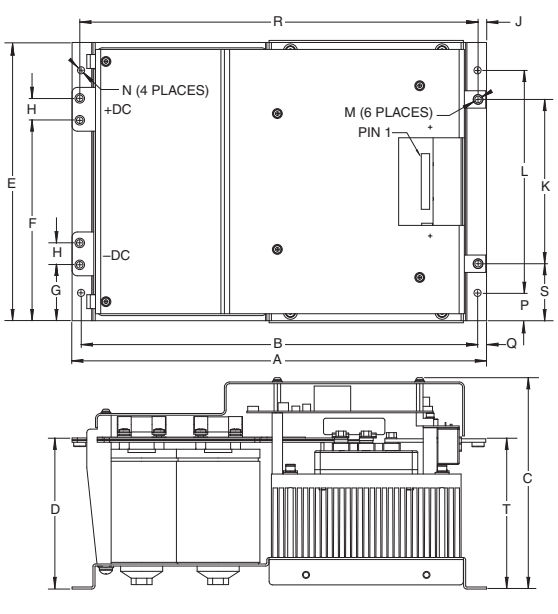

Dim.	Inches	Millimeters
A	14.9	378.4
B	14.25	362.0
C	7.6	193.0
D	5.43	138.0
E	10.15	257.8
F	7.2	183.0
G	2.01	51.0
H	0.79	20.0
J	0.3	7.7

Dim.	Inches	Millimeters
K	5.91	150.0
L	8.0	203.2
M	M6 Metric	M6
N	0.256 Dia.	6.5 Dia.
P	1.0	25.4
Q	0.32	8.2
R	14.32	363.6
S	2.05	52.0
T	5.4	137.1

4 PP400B060-ND

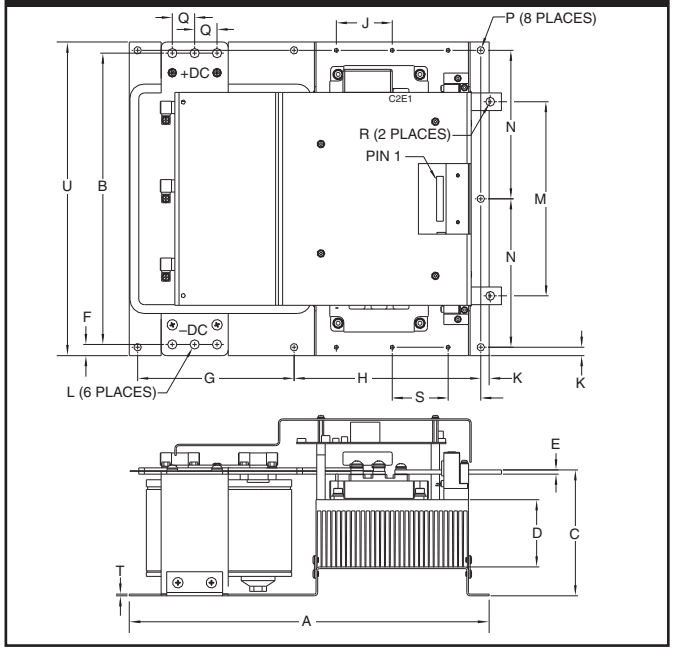

Dim.	Inches	Millimeters
A	16.1	408.9
B	13.0	330.2
C	5.62	142.6
D	3.0	76.2
E	0.19	4.8
F	0.5	12.7
G	7.0	177.8
H	8.35	212.1
J	2.5	63.5
K	0.38	9.5

Dim.	Inches	Millimeters
L	0.41 Dia.	10.5 Dia.
M	8.66	220.0
N	6.63	168.3
P	0.33 Dia.	8.5 Dia.
Q	1.0	25.4
R	0.39 Dia.	10.0 Dia.
S	1.46	37.1
T	0.07	1.9
U	14.0	355.6

CUSTOM MODULES *(Commercial / Moisture Resistant / Hermetic)*

Capabilities:

Customers looking for application specific custom power modules benefit from Powerex's years of experience in chip manufacturing and design / engineering. Powerex custom power modules employ performance proven features. Soldered-down and wire bonding fabrication and compression bonded encapsulation (CBE) of SCR / Diode elements offer increased switching speeds, lower losses, more efficient cooling and higher power handling capabilities.

Reliability / Qualification Testing:

Reliability and qualification testing can be performed in accordance to military specifications, including Group A, B and C and specific customer requirements.

Features:

- Different Circuit Configurations *(i.e. Common Emitter, Chopper)*
- Different Termination Styles *(i.e. Thicker Bus Bars, D-sub Connectors, Press On Pins, etc.)*
- Extended Temperature Range, -55°C to 200°C
- Hermetic Modules
- High Voltage Isolation
- Integrated Heatsinks – Both Air and Liquid Cooled by Eliminating the Baseplate
- Larger Free-wheel Diodes
- Low Module Weight
- Moisture Resistance
- Over-current Shutdown
- Package Height, Width and Length
- Temperature and Current Sense

Substrates:

- Alumina
- Aluminum Nitride
- BeO
- IMS

Die Technology:

- Diode
- FR Diode
- GTO
- HVIGBT
- IGBT
- MOSFET
- SCR
- SiC Diode
- SiC MOSFET

Packages:

- Custom Development for Both Plastic and Hermetic Packages
- Picture Frame
- Standard IGBT Cases

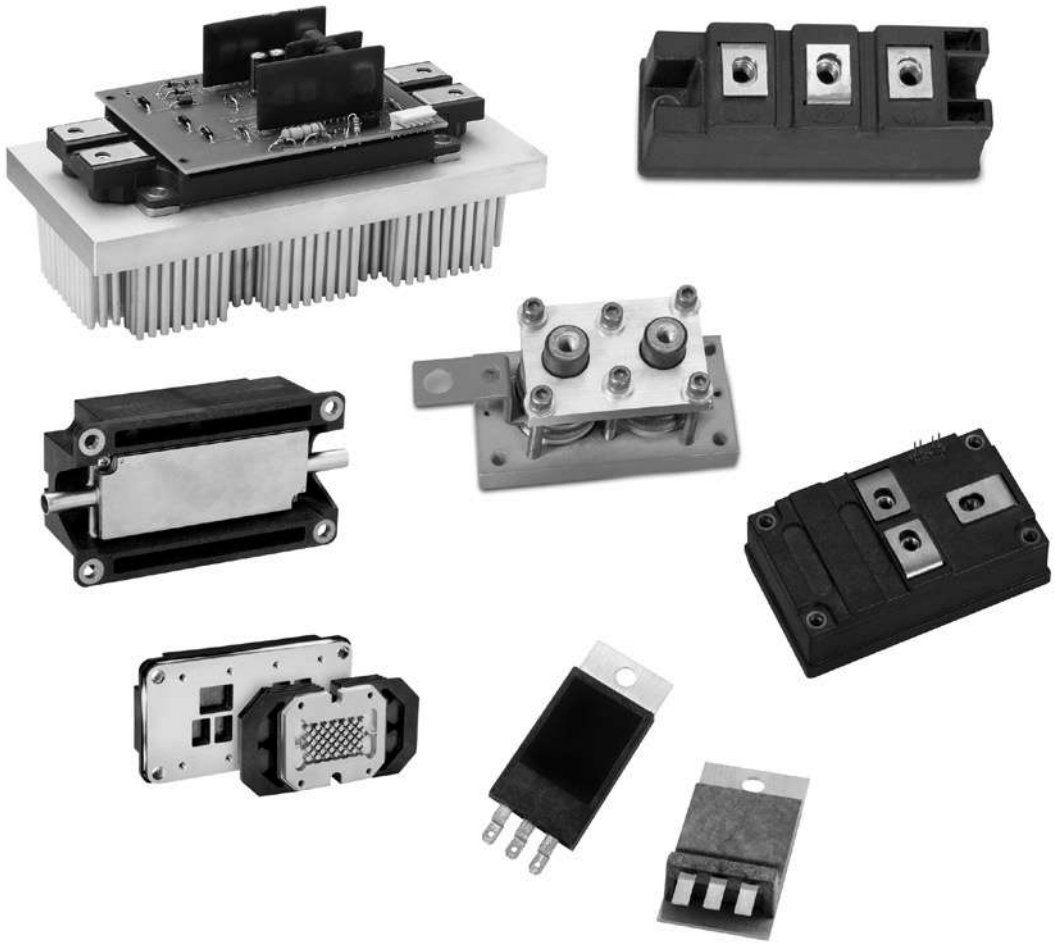

VOLTAGE: 30V TO 15,000V
CURRENT: 50A TO 1600A

For more information:

visit: http://www.pwrx.com/summary/custom-power-modules.aspx
email: globalsales@pwrx.com
phone: 724-925-7272, Option 3 (Applications Engineering Assistance)

GATE DRIVERS & IPM INTERFACE

Applications Include:
- IGBT Gate Driver Development Kit
- TRIAC Trigger
- IPM Interface

Packages:
- DIP
- PCB
- SIP
- SMT/SOP
- TO-92S

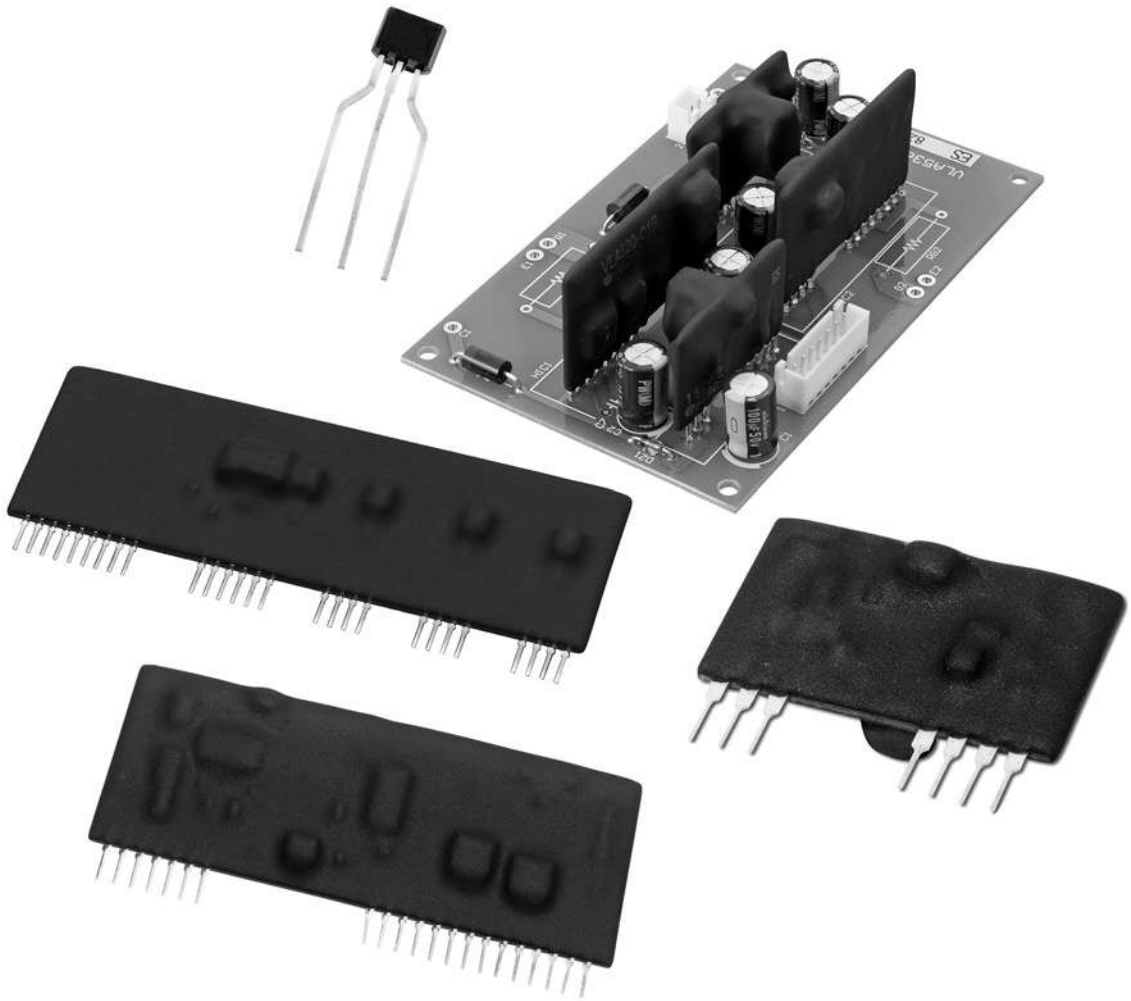

TABLE OF CONTENTS

IGBT Gate Drivers M-2
IGBT Gate Driver Development Kits M-4
IPM Interface Board M-4
Silicon Bilateral Switch M-4
Outline Drawings M-5

IGBT Gate Drivers, (Refer to device datasheets at www.pwrx.com for test conditions.)

Type	Integral DC-to-DC Converter	Short-circuit Protection	Soft Shutdown	Input Voltage (Volts)	Output Voltage (Volts)	Output Current (Amperes)	Usable Range	Optimum Range	Outline Drawings Number	Page
M57962K	No	V_{CE} Desaturation	Yes			±5	600V, 600A, 1200V 600A, 1700V, 400A	1700V, 400A	10	M-8
M57159L	No	V_{CE} Desaturation	Yes				600V, 150A 1200V, 75A	600V, 75A 1200V, 50A	1	M-5
VLA500-01	Yes	V_{CE} Desaturation	Yes – Adjustable	15V	+15V/-8V	±12	600V, 800A 1200V, 1400A	600V, 800A 1200V, 1400A	5	M-6
VLA500K-01R	Yes	V_{CE} Desaturation	Yes Adjustable	15V	+15V/-8V	±12	1700V, 2400A	1700V, 2400A	6	M-6
VLA502-01	Yes	V_{CE} Desaturation	Yes – Adjustable	15V	+15V/-8V	±12	600V and 1200V High Frequency NFH-series Modules		5	M-6
VLA503-01	No	V_{CE} Desaturation	Yes			±5	600V, 600A 1200V, 600A	600V, 400A 1200V, 200A	2	M-5
VLA504-01	No	V_{CE} Desaturation	Yes			±3	600V, 400A 1200V, 200A	600V, 100A 1200V, 50A	2	M-5
VLA507-01	No	None	No			±3	600V, 200A 1200V, 150A	600V, 200A 1200V, 150A	3	M-5
VLA513-01	No	None	No			±5	600V, 600A 1200V, 400A	600V, 600A 1200V, 400A	4	M-6
VLA536-01R	Yes	V_{CE} Desaturation	Yes	15V	+15V/-8V	±5	All 600V and 1200V NX-Series Dual Modules	600V, 600A 1200V, 450A	8	M-7
VLA552-01R	Yes	V_{CE} Desaturation	Yes – Adjustable	15V	+15V/-8V	±24	1200V, 2500A 1700V, 1800A	All MPD and New MPD Modules	1200V, 2500A 1700V, 1800A	9	M-7
VLA553-01R	Yes	V_{CE} Desaturation	Yes – Adjustable	15V	+15V/-8V	±24	1200V, 2500A 1700V, 1800A	All MPD and New MPD Modules	1200V, 2500A 1700V, 1800A	11	M-8
VLA553-02R	Yes	V_{CE} Desaturation	Yes – Adjustable	15V	+15V/-8V	±24	1200V, 2500A 1700V, 1800A	All MPD and New MPD Modules	1200V, 2500A 1700V, 1800A	11	M-8
VLA567-01R	Yes	V_{CE} Desaturation	Yes – Adjustable	15V	+15V/-8V	±8	600V, 1000A 1200V, 1000A	600V, 1000A 1200V, 1000A	12	M-8

VLA500-01, VLA500K-01R

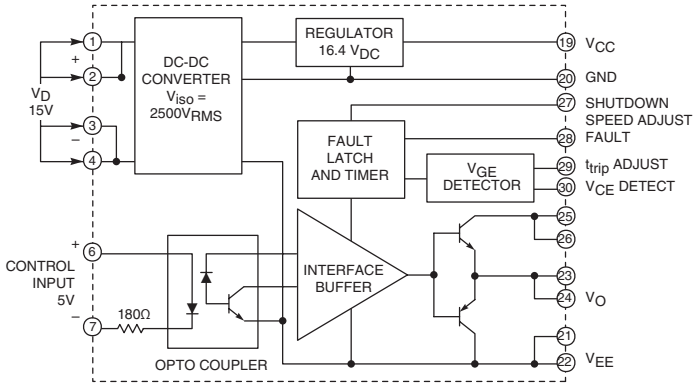

VLA502-01

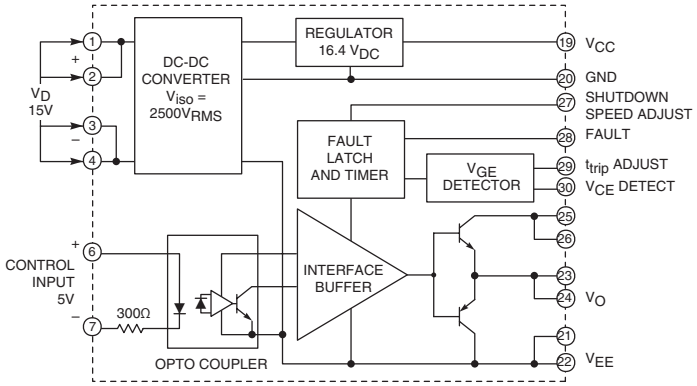

VLA552-01R

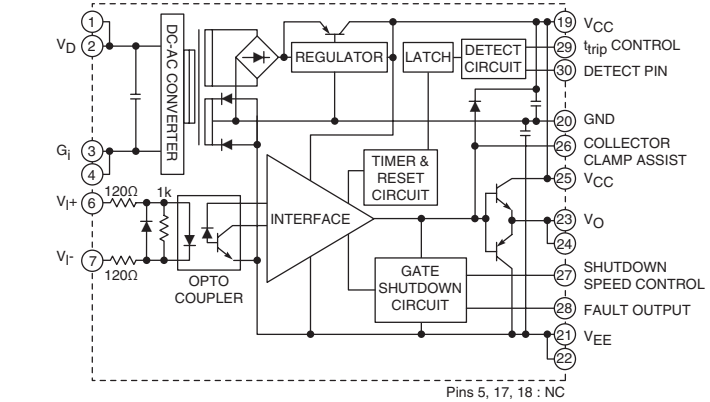

M57159L, M57962K, VLA503-01, VLA504-01

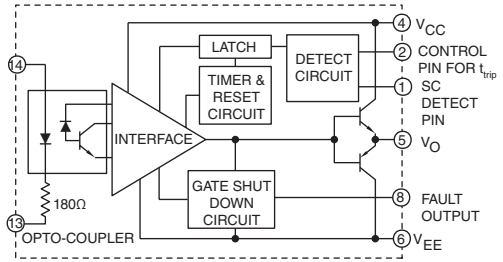

VLA507-01, VLA513-01

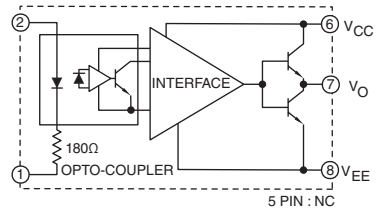

VLA536-01R

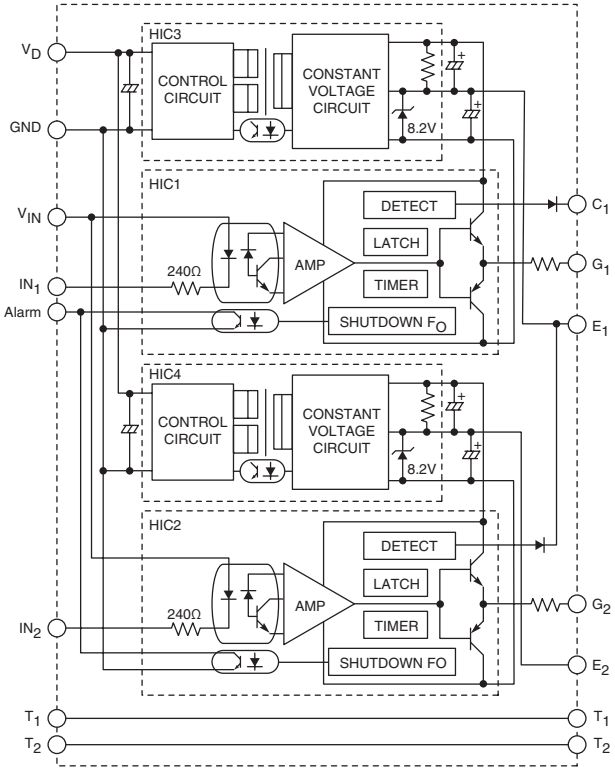

VLA553-01R, VLA553-02R

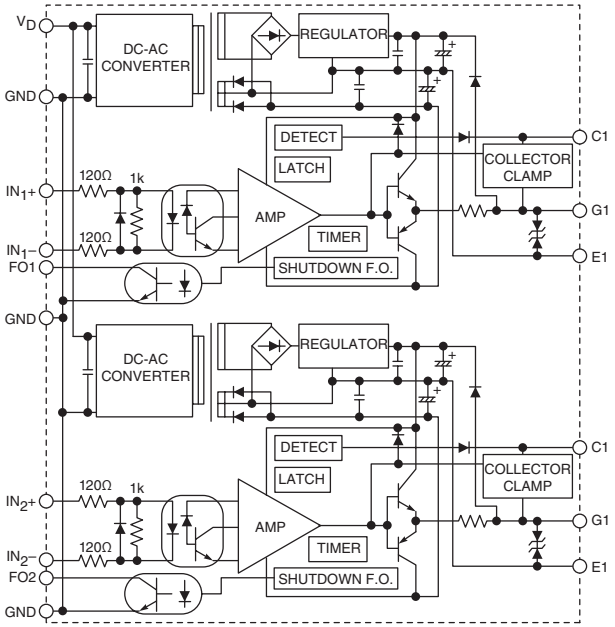

VLA567-01R

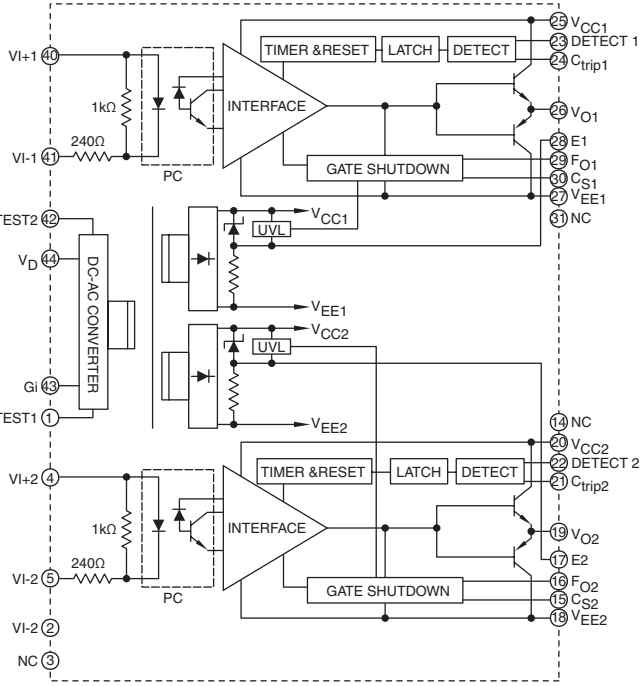

IGBT Gate Driver Development Kits

Part Number	Prototype Board*	Gate Driver Part Number*	Peak Drive Current Amperes	Minimum RG Ω	Desaturation Detection	Typical Module Rating Amperes	Recommended DC-to-DC Converter*
BG2B-1515	BG2B	M57159L-01	±1.5	4.2	Yes	Up to 100A	VLA106-15242 (For 15VDC Input) VLA106-24242 (For 24VDC Input)
BG2B-3015	BG2B	VLA504-01	±3.0	3.0	Yes	Up to 200A	
BG2B-5015	BG2B	VLA503-01	±5.0	2.0	Yes	Up to 600A	
BG2C-3015	BG2C	VLA507	±3.0	3.9	No	Up to 200A	
BG2C-5015	BG2C	VLA513	±5.0	2.0	No	Up to 600A	
BG2A-NF	BG2A	VLA500-01	±12.0	1.0	Yes	Up to 1400A	Included in Gate Driver
BG2A-NFH	BG2A	VLA502-01	±12.0	1.0	Yes	Up to 600A NFH Series Devices	
BG2A-K	BG2A	VLA500K	±12.0	1.0	Yes	1700V Up to 1000A	Included in Gate Driver
BG2D-5015	BG2D	VLA503-01	±5.0	2.0	Yes	Up to 450A NX Series Duals	VLA106-15242
BG2E	BG2E	VLA500-01	±12.0	1.0	Yes	Up to 1000A NXL Series Duals	Included in Gate Driver
BG2G-8015	BG2G	VLA567-01R	±8.0	2.0	Yes	Up to 1000A	Included in Gate Driver

*Driver board come with parts noted here and are not assembled.

Silicon Bilateral Switch,

(Refer to device datasheet at www.pwrx.com for test conditions.)

ELECTRICAL CHARACTERISTICS										Outline Drawings	
Type	I_T mA	I_G Amperes	V_S VS	P_T mW	I_S µA	I_H mA	V_T Volts	I_{GT} µA (Min.)	V_{GT} µA (Max.)	Number	Page
BS08D-T112	175	5	8	450	200	1.5	1.4	10	200	7	M-7

IPM Interface Board

Part Number	Prototype Board	Typical Module Rating Amperes	Recommended DC-to-DC Converter*
BP2B-V	BP2B-V	Up to 800A V1-Series IPM	VLA106-15151

1 M57159L

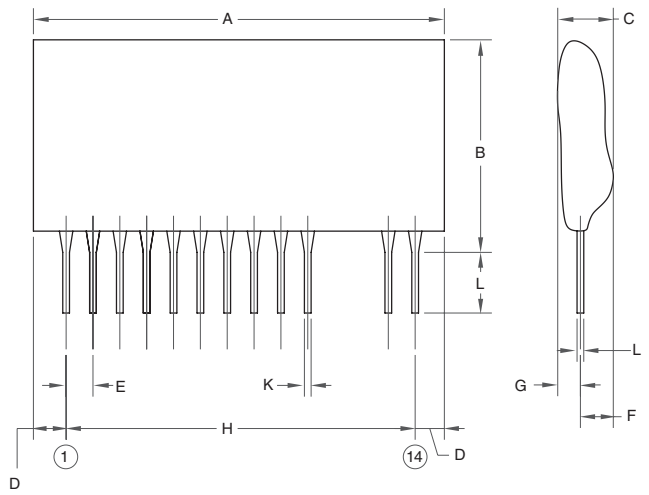

Dim.	Inches	Millimeters
A	1.70 Max.	43.0 Max.
B	0.87 Max.	22.0 Max.
C	0.43 Max.	11.0 Max.
D	0.22 Max.	5.5 Max.
E	0.10	2.54
F	0.34 Max.	8.5 Max.

Dim.	Inches	Millimeters
G	0.14 Max.	3.5 Max.
H	1.30	33.02
J	0.18±0.06	4.5±1.5
K	0.02±0.0008	0.55±0.2
L	0.01±0.008	0.35±0.2

2 VLA503-01, VLA504-01

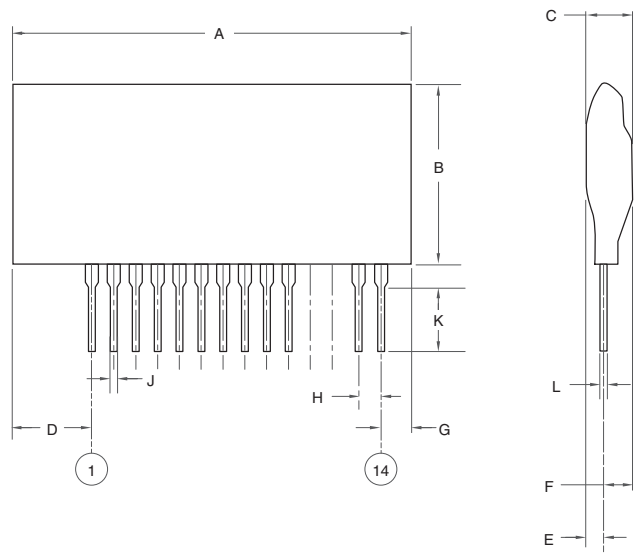

Dim.	Inches	Millimeters
A	2.0 Max.	51.0 Max.
B	1.02 Max.	26.0 Max.
C	0.4 Max.	10.0 Max.
D	0.45 Max.	11.5 Max.
E	0.12 Max.	3.0 Max.
F	0.3 Max.	7.5 Max.

Dim.	Inches	Millimeters
G	0.25 Max.	6.5 Max.
H	0.10 Max.	2.54 Max.
J	0.02+0.02/-0.004	0.5+0.5/-0.1
K	0.18±0.06	4.5±1.5
L	0.01+0.01/-0.004	0.25+0.2/-0.1

3 VLA507-01

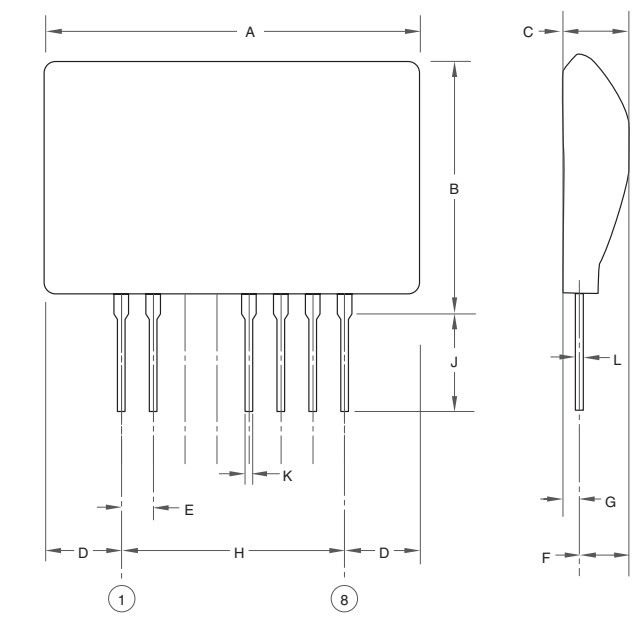

Dim.	Inches	Millimeters
A	1.18 Max.	30.0 Max.
B	0.79 Max.	20.0 Max.
C	0.28 Max.	7.0 Max.
D	0.24 Max.	6.0 Max.
E	0.10	2.54
F	0.216 Max.	5.5 Max.

Dim.	Inches	Millimeters
G	0.08 Max.	2.0 Max.
H	0.70	17.78
J	0.18±0.06	4.5±1.5
K	0.02	0.5
L	0.01	0.25

4 VLA513-01

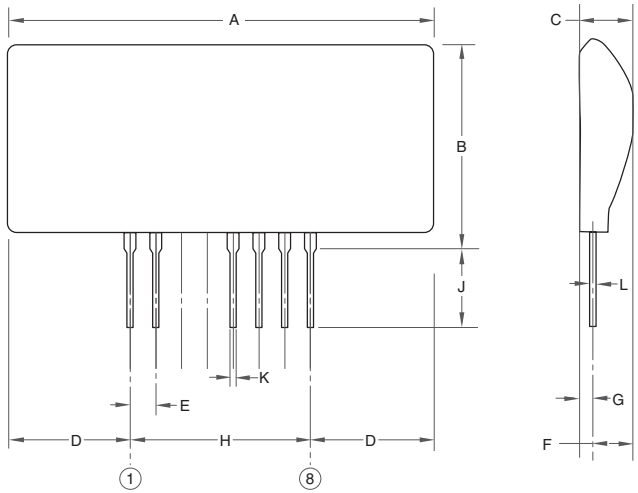

Dim.	Inches	Millimeters
A	1.85 Max.	47.0 Max.
B	1.063 Max.	27.0 Max.
C	0.28 Max.	7.0 Max.
D	0.59 Max.	15.0 Max.
E	0.10	2.54
F	0.216 Max.	5.5 Max.

Dim.	Inches	Millimeters
G	0.08 Max.	2.0 Max.
H	0.70	17.78
J	0.18±0.06	4.5±1.5
K	0.03	0.75
L	0.02	0.5

5 VLA500-01, VLA502-01

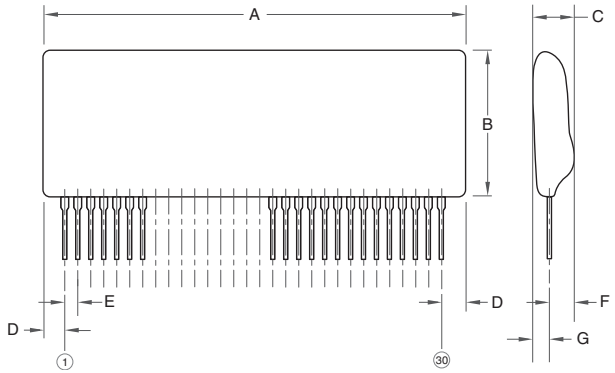

Dim.	Inches	Millimeters
A	3.27 Max.	83.0 Max.
B	1.30 Max.	33.0 Max.
C	0.61 Max.	15.5 Max.
D	0.20 Max.	5.0 Max.

Dim.	Inches	Millimeters
E	0.10	2.54
F	0.45 Max.	11.5 Max.
G	0.18 Max.	4.6 Max.

6 VLA500K-01R

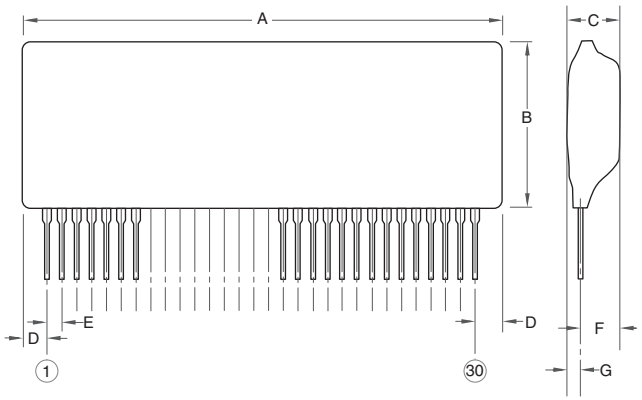

Dim.	Inches	Millimeters
A	3.27 Max.	83.0 Max.
B	1.30 Max.	33.0 Max.
C	0.67 Max.	17.0 Max.
D	0.20 Max.	5.0 Max.

Dim.	Inches	Millimeters
E	0.10	2.54
F	0.45 Max.	11.5 Max.
G	0.24 Max.	6.0 Max.

7 BS08D-T112

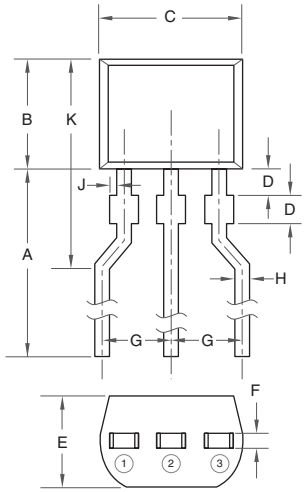

Dim.	Inches	Millimeters
A	0.55 Min.	14.0 Min.
B	0.12 Max.	3.0 Max.
C	0.16	4.0
D	0.39	1.0
E	0.098 Max.	2.5 Max.

Dim.	Inches	Millimeters
F	0.016	0.4
G	0.10	2.5
H	0.018	0.45
J	0.004	0.1
K	0.29 Max.	7.5 Max.

8 VLA536-01R

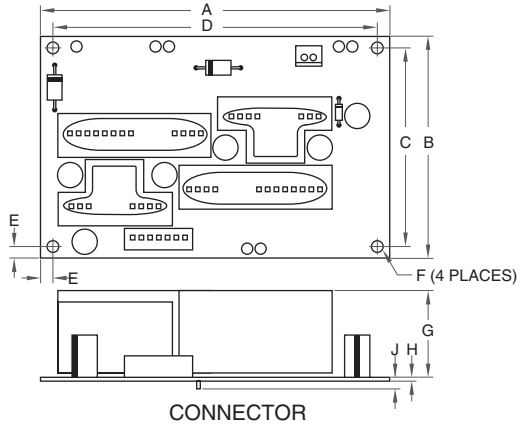

CONNECTOR

Pin	CN1	CN2
1	V_D	T_1
2	GND	T_2
3	NC	
4	Alarm	
5	IN_1	
6	IN_2	
7	V_{IN}	

Dim.	Inches	Millimeters
A	3.97±0.04	101.0±1.0
B	2.52±0.02	64.0±0.5
C	2.26	57.5
D	3.75	94.5
E	0.13	3.25

Dim.	Inches	Millimeters
F	0.12 Dia.	3.0 Dia,
G	1.14 Max.	29.0 Max.
H	0.06	1.6
J	0.12 Max.	3.0 Max.

9 VLA539-01R, VLA552-01R

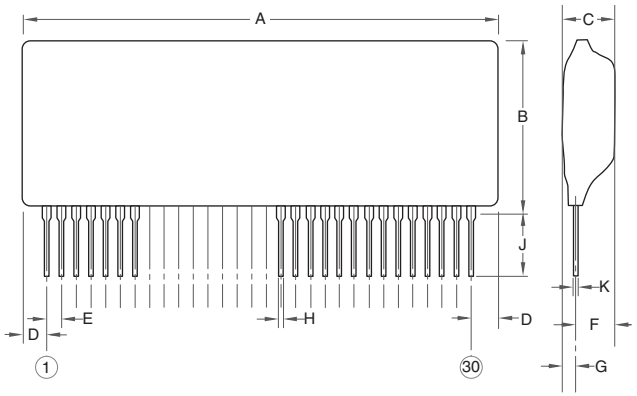

Dim.	Inches	Millimeters
A	3.46 Max.	88.0 Max.
B	1.65 Max.	42.0 Max.
C	0.67 Max.	17.0 Max.
D	0.31 Max.	8.0 Max.
E	0.1	2.54

Dim.	Inches	Millimeters
F	0.45 Max.	11.5 Max.
G	0.23 Max.	6.0 Max.
H	0.03±0.004	0.75±0.1
J	0.14±0.04	3.5±1.0
K	0.027 Max.	0.7 Max.

10 M57962K

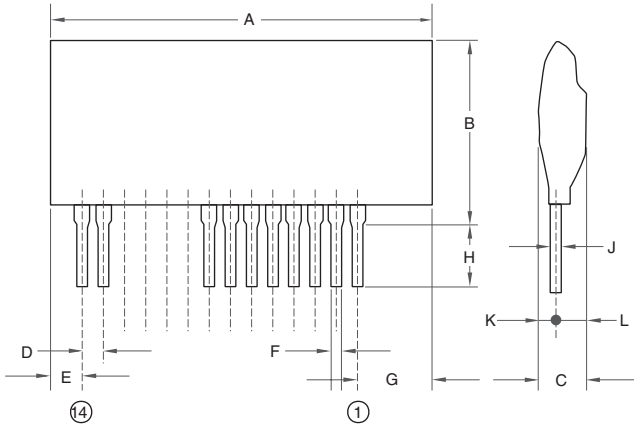

Dim.	Inches	Millimeters
A	2.0 Max.	51.0 Max.
B	1.06 Max.	27.0 Max.
C	0.4 Max.	10.0 Max.
D	0.10	2.54
E	0.26 Max.	6.5 Max.
F	0.02+0.006/-0.004	0.5+0.15/-0.1

Dim.	Inches	Millimeters
G	0.5 Max.	12.5 Max.
H	0.18±0.06	4.5±1.5
J	0.01+0.008/-0.004	0.25+0.2/-0.1
K	0.12 Max.	3.0 Max.
L	0.3 Max.	7.5 Max.

11 VLA553-01R, VLA553-02R

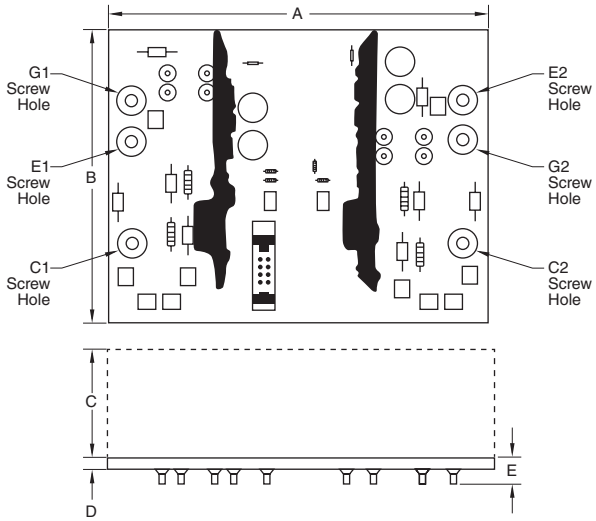

Dim.	Inches	Millimeters
A	5.63	143.0
B	4.33	110.0
C	1.69 Max.	43.0 Max.

Dim.	Inches	Millimeters
D	0.063	1.6
E	0.12 Max.	3.0 Max.

12 VLA567-01R

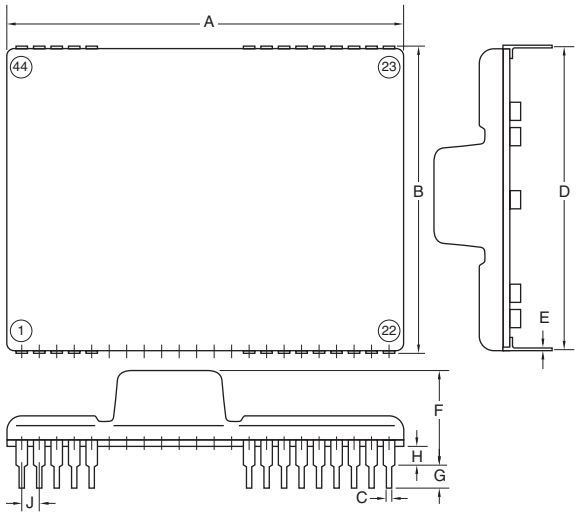

Dim.	Inches	Millimeters
A	2.44 Max.	62.0 Max.
B	1.89 Max.	48.0 Max.
C	0.02±0.0039	0.5±0.1
D	1.8	45.72
E	0.01+0.0067/-0.0039	0.27+0.17/-0.1

Dim.	Inches	Millimeters
F	0.67 Max.	17.0 Max.
G	0.177±0.06	4.5±1.5
H	0.14	3.5
J	0.1	2.54

DC-DC CONVERTERS

Applications Include:
- Industrial Power Conversions
- Isolated Power for IPMs

Packages:
- Dual-In-Line
- Prototype IPM Development Kit
- SIP

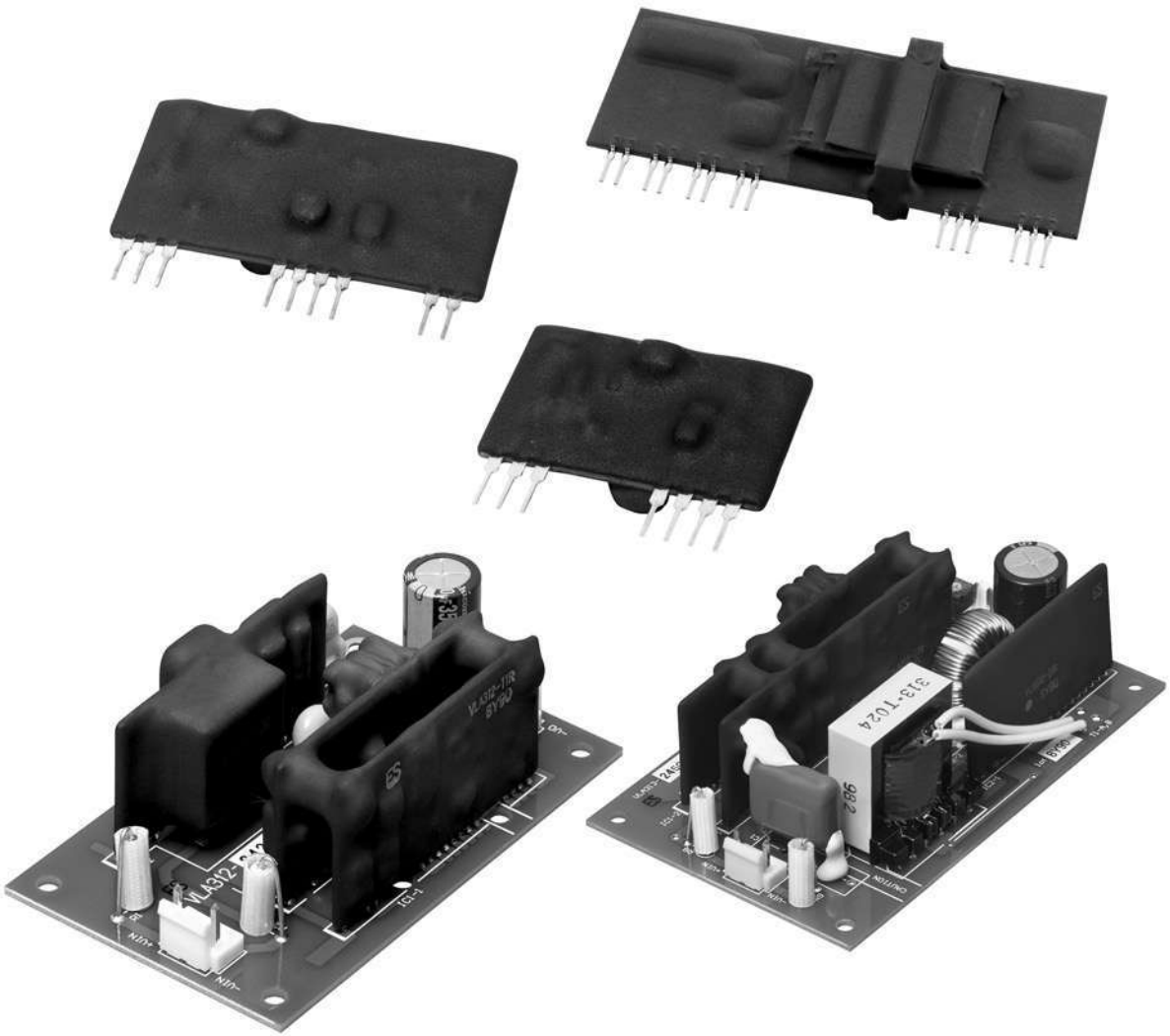

TABLE OF CONTENTS

DC-to-DC Converter Modules N-2

Prototype IPM Interface Boards N-3

Outline Drawings N-4

DC-to-DC Converter Modules for Gate Drive and IPM Control Power

Type	Isolated	Isolated Voltage V_{RMS} (Volts)	Input (V_{DC})	Output(s) (Volts A ma)	Power Watts	Primary Application	Outline Drawings Number	Outline Drawings Page
M57140-01	Yes	Primary to Secondary = 2500V Secondary to Secondary = 1500V	18-22	4 x 15V	3.0	Isolated Power for IPM Modules	1	N-4
M57182N-315	No	Step Down Converter	140-380	15V	3.0	DIP Control Power	2	N-4
M57184N-715B	No	Step Down Converter	140-380	5, 15V	6.25	DIP Control Power	3	N-4
VLA106-15151	Yes	Primary to Secondary = 2500V	12-18	15V	1.5	Isolated Power for IPM Modules	4	N-5
VLA106-15242	Yes	Primary to Secondary = 2500V	12-18	18V	1.5	Isolated Power for Hybrid Gate Drivers	4	N-5
VLA106-24151	Yes	Primary to Secondary = 2500V	21.6 - 26.4	15V	2.4	Isolated Power for IPM Modules	4	N-5
VLA106-24154	Yes	Primary to Secondary = 2500V	21.6 - 26.4	15V	2.4	Isolated Power for IPM Modules	5	N-5
VLA106-24242	Yes	Primary to Secondary = 2500V	21.6 - 26.4	24V	4.5	Isolated Power for Hybrid Gate Drivers	4	N-5
VLA107-644R	Yes	Primary to Secondary = 2500V	12-24	4x15V	7.2	Isolated Power for IPM Modules	7	N-6
VLA107-677R	Yes	Primary to Secondary = 2500V	12-24	4x15V	11.5	Isolated Power for IPM Modules	7	N-6
VLA312-2425	Yes	Primary to Secondary = 2500V	475 - 850	24V	25.2	Pre-regulator for 460VAC Industrial Controls	8	N-6
VLA313-2450A	Yes	Primary to Secondary = 2500V	400 - 900	24V	50.4	Pre-regulator for 460VAC Industrial Controls	6	N-5

VLA106-15151, VLA106-24151, VLA106-24154

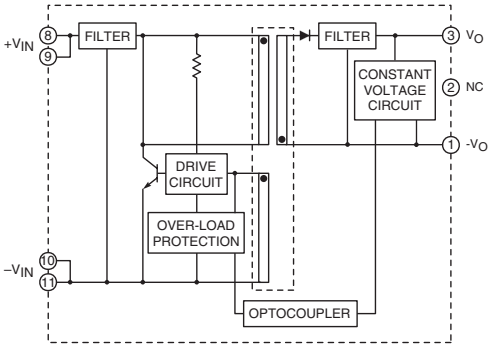

VLA312-2425, VLA313-2450A

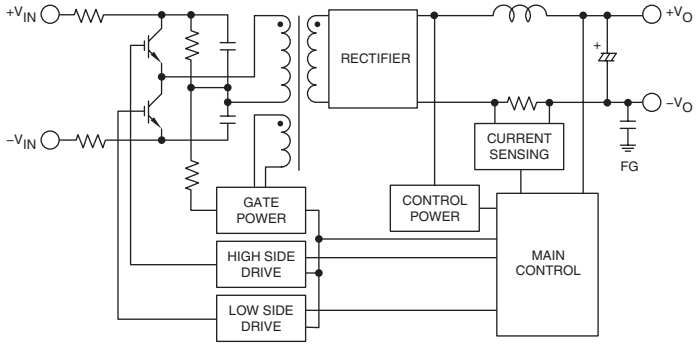

VLA106-15242, VLA106-24242

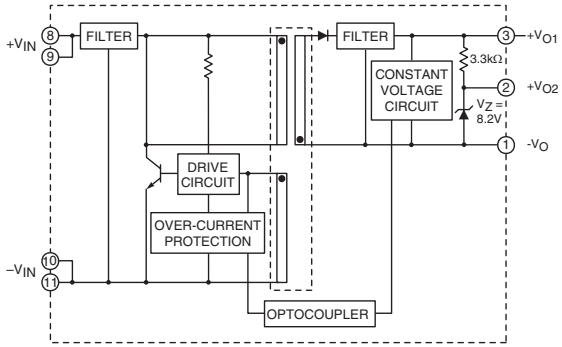

VLA107-644R, VLA107-677R

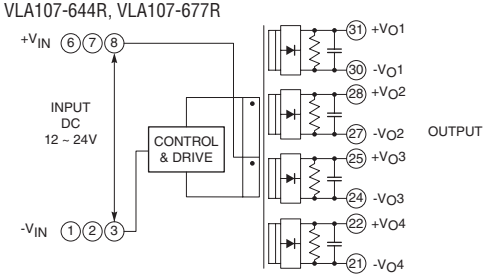

M57140-01

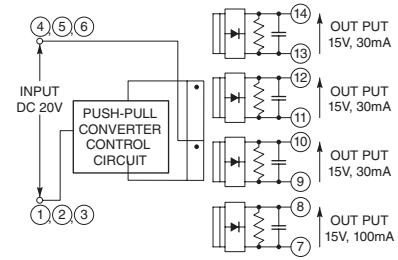

M57184N-715B

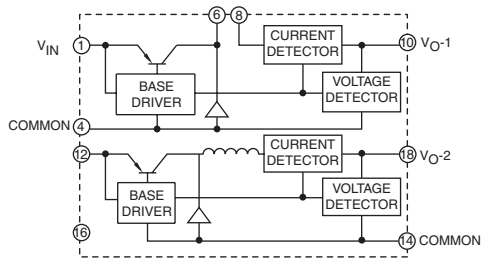

M57182N-315

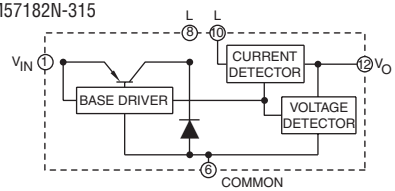

Prototype IPM Interface Boards

Part Number	L-Series IPM Part Number	Voltage Volts	Current Amperes	Package	Recommended DC-to-DC Converter*
BP7A-LS**	PM50(#)L1(*)060	600	50	A or B	VLA106-24151 x 4pc.
BP7B-LS	PM75(#)L1(*)060	600	75		
	PM100(#)L1(*)060	600	100		
	PM150(#)L1(*)060	600	150		
BP7A-LB**	PM200(#)L1(*)060	600	200	C	VLA106-24151 x 3pc.
BP7B-LB	PM300(#)L1(*)060	600	300		VLA106-24154 x 1pc.
BP6A-L	PM450CLA060	600	450	D	VLA106-24151 x 6pc.
	PM600CLA060	600	600		

Part Number	L-Series IPM Part Number	Voltage Volts	Current Amperes	Package	Recommended DC-to-DC Converter*
BP7A-LS**	PM25(#)L1(*)120	1200	25	A or B	VLA106-24151 x 4pc.
BP7B-LS	PM50(#)L1(*)120	1200	50		
	PM75(#)L1(*)120	1200	75		
BP7A-LB**	PM100(#)L1A120	1200	100	C	VLA106-24151 x 3pc.
BP7B-LB	PM150(#)L1A060	1200	150		VLA106-24154 x 1pc.
BP6A-L	PM200CLA120	1200	200	D	VLA106-24151 x 6pc.
	PM300CLA120	1200	300		
	PM450CLA120	1200	450		

*Interface board come with parts noted here and are not assembled.
**For 3.3V Logic

1 M57140-01

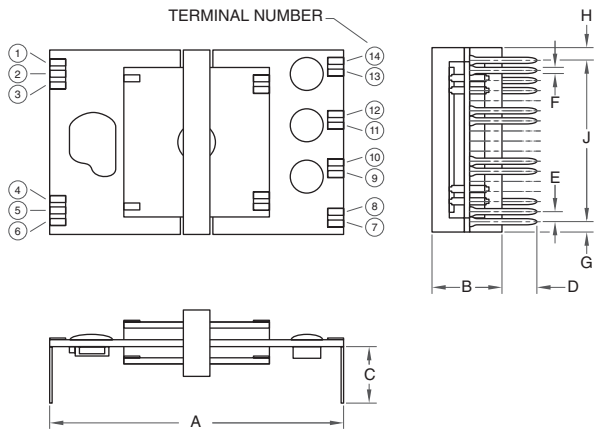

Dim.	Inches	Millimeters
A	2.03	51.5
B	0.71	18.0
C	0.39±0.06	12.5±1.5
D	0.18±0.06	4.5±1.5
E	0.07	1.8

Dim.	Inches	Millimeters
F	0.02	0.55
G	0.08	2.1
H	0.08	2.1
J	1.13	28.8

2 M57182N-315

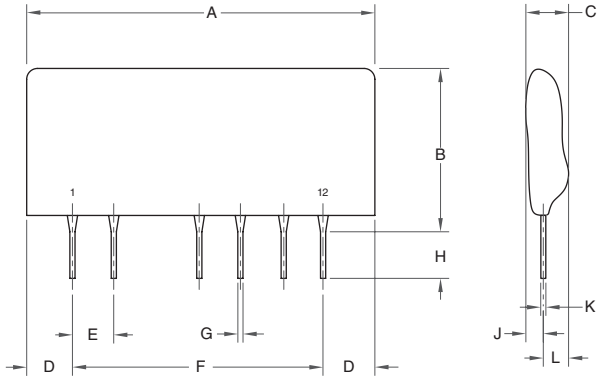

Dim.	Inches	Millimeters
A	1.38 Max.	35.0 Max.
B	0.79 Max.	20.0 Max.
C	0.34 Max.	8.5 Max.
D	0.14 Max.	3.5 Max.
E	0.02	5.08
F	1.10	27.94

Dim.	Inches	Millimeters
G	0.02	0.55±0.1
H	0.18±0.6	4.5±1.5
J	0.15 Max.	3.8 Max.
K	0.01±0.008	0.35±0.02
L	0.20 Max.	5.0 Max.

3 M57184N-715B

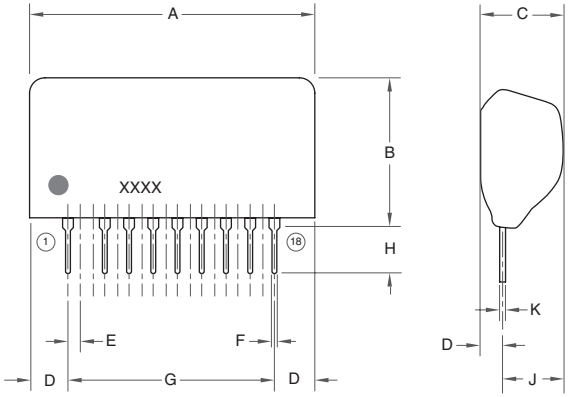

Dim.	Inches	Millimeters
A	2.05 Max.	52.0 Max.
B	0.95 Max.	24.0 Max.
C	0.47 Max.	12.0 Max.
D	0.18 Max.	4.5 Max.
E	0.01	2.54

Dim.	Inches	Millimeters
F	0.02±0.004	0.55±0.1
G	1.70	43.18
H	0.16±0.4	4.0±1.0
J	0.3 Max.	7.5 Max.
K	0.01±0.008	0.35±0.2

4 VLA106-15151, VLA106-15242, VLA106-24151, VLA106-24242

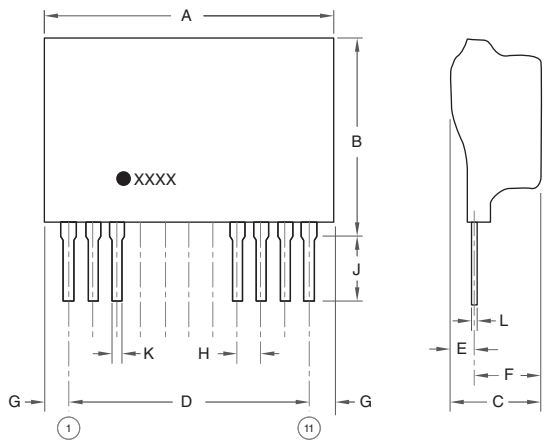

Dim.	Inches	Millimeters
A	1.3	33.0
B	0.945	24.0
C	0.71	18.0
D	1.0	25.4
E	0.22	5.5
F	0.53	13.5

Dim.	Inches	Millimeters
G	0.18	4.5
H	0.10	2.54
J	0.18±0.06	4.5±1.5
K	0.02+0.004/-0.002	0.5+0.1/-0.05
L	0.01+0.01/-0.002	0.25+0.2/-0.05

Note: All dimensions listed are maximums except D.

5 VLA106-24154

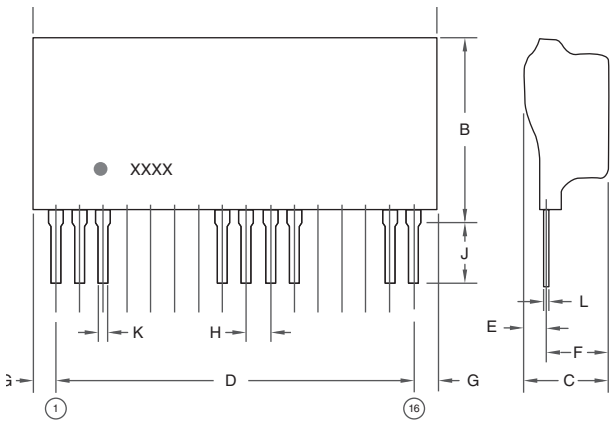

Dim.	Inches	Millimeters
A	1.87	47.5
B	0.945	24.0
C	0.71	18.0
D	1.60	40.64
E	0.22	5.5
F	0.53	13.5

Dim.	Inches	Millimeters
G	0.18	4.5
H	0.10	2.54
J	0.18±0.06	4.5±1.5
K	0.02+0.004/-0.002	0.5+0.1/-0.05
L	0.01+0.01/-0.002	0.25+0.2/-0.05

Note: All dimensions listed are maximums except D.

6 VLA313-2450A

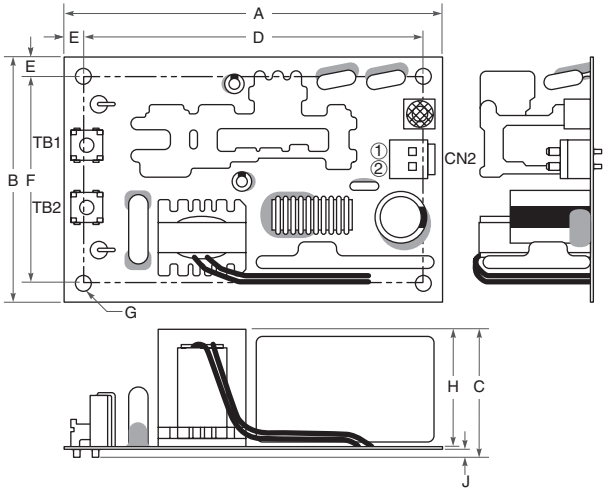

CONNECTOR

Parts No.	Polarity
TB1 (OT-047 M3, OSADA)	$+V_{IN}$
TB2 (OT-047 M3, OSADA)	$-V_{IN}$
CN2 (B2P-VH, JST)	① $+V_O$ ② $-V_O$

TEST CIRCUIT DIAGRAM

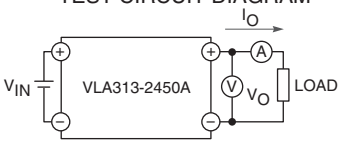

Dim.	Inches	Millimeters
A	4.53±0.012	115.0±0.3
B	2.76±0.012	70.0±0.3
C	1.42 Max.	36.0 Max.
D	4.13±0.012	105.0±0.3
E	0.2	5.0

Dim.	Inches	Millimeters
F	2.36±0.012	60.0±0.3
G	0.14 Dia.	3.5 Dia.
H	1.26 Max.	32.0 Max.
J	0.12 Max.	3.0 Max.

7 VLA107-644R, VLA107-677R

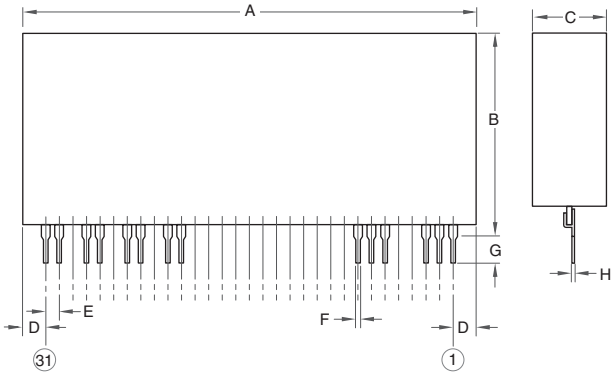

Dim.	Inches	Millimeters
A	3.42 Max.	87.0 Max.
B	1.53 Max.	39.0 Max.
C	0.55 Max.	14.0 Max.
D	0.21 Max.	5.5 Max.

Dim.	Inches	Millimeters
E	0.1	2.54
F	0.03±0.004	0.75±0.1
G	0.18±0.6	4.5±1.5
H	0.01+0.008/-0.004	0.5+0.2/-0.1

8 VLA312-2425

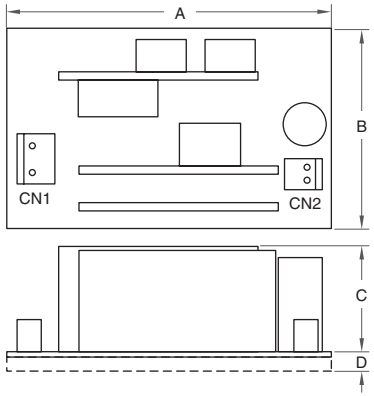

CONNECTOR

Parts No.	CN1 B2P3-VH, JST	CN2 B2P-VH, JST
Polarity (Pin 1)	$-V_{IN}$	$+V_O$
Polarity (Pin 2)	—	$-V_O$
Polarity (Pin 3)	$+V_{IN}$	—

TEST CIRCUIT DIAGRAM

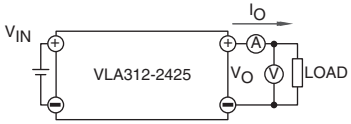

Dim.	Inches	Millimeters
A	3.54	90.0
B	2.16	55.0
C	1.38	35.0
D	0.20	5.0

© Siemens AG 2015

SIEMENS

SINAMICS GM150
SINAMICS SM150

Supplement for Catalog D 12 2012

SINAMICS Drives

Catalog Supple-ment

Edition 01/2015

Answers for industry.

SIEMENS

SINAMICS GM150
SINAMICS SM150

Medium Voltage Converters

Supplement for Catalog D 12 2012

01/28/2015

Newsletter "Medium voltage converters"	1
Corrections	2
SINAMICS GM150 in IGBT version	3
SINAMICS GM150 in IGCT version	4
SINAMICS GM150 in IGCT Tandem version	5
SINAMICS SM150	6
Options	7
Static excitation units	8
Permissible cable lengths	9

The information provided in this catalog supplement contains descriptions or characteristics of performance which in case of actual use do not always apply as described or which may change as a result of further development of the products. An obligation to provide the respective characteristics shall only exist if expressly agreed in the terms of contract. Availability and technical specifications are subject to change without notice.

All product designations may be trademarks or product names of Siemens AG or supplier companies whose use by third parties for their own purposes could violate the rights of the owners.

© Siemens AG 2015

Table of contents

1 Newsletter "Medium voltage converters" ... 6

2 Corrections ... 7

3 SINAMICS GM150 in IGBT version ... 9

3.1 Modified article numbers for air cooling ... 9

3.2 Modified article numbers for water cooling ... 10

4 SINAMICS GM150 in IGCT version ... 11

5 SINAMICS GM150 in IGCT Tandem version ... 12

5.1 Overview ... 12

5.2 Options ... 13

5.3 Selection and ordering data ... 13

5.4 Technical data ... 14

6 SINAMICS SM150 ... 15

6.1 SIMATIC HMI TP900 Comfort operator panel ... 15

7 Options ... 16

7.1 New options ... 16

7.1.1 G51 to G54 TM150 Terminal Module, temperature sensor evaluation units (SINAMICS GM150; SINAMICS SM150 on request) ... 16

7.1.2 K66 Power section with internal cooling (SINAMICS GM150 in water-cooled IGBT version; SINAMICS GM150 and SINAMICS SM150 in IGCT version on request) ... 19

7.1.3 L10 dv/dt filter (SINAMICS GM150 in IGCT version, SINAMICS SM150 in IGCT version) ... 20

7.1.4 M44 IP44 degree of protection (SINAMICS GM150 in water-cooled version and SINAMICS SM150 in IGCT version) ... 21

7.1.5 N16 36-pulse Basic Line Module (SINAMICS GM150; IGCT version on request)22

7.1.6 U03 CSA certificate (on request) ... 22

7.1.7 Y26 Premagnetizing unit (SINAMICS GM150; on request) ... 22

7.2 Options with changed availability ... 23

7.2.1 E82 Increased frequency (converter for high-speed rotors) ... 23

7.2.2 G20 to G24 Access to other bus systems ... 23

7.2.3 L08 Output reactor ... 24

7.2.4 L53 UPS for the for the power supply of the open-loop and closed-loop control (SINAMICS GM150) ... 24

© Siemens AG 2015

7.2.5 Y15 Sine-wave filter ... 25

7.3 Updated option descriptions ... 26
7.3.1 K80 Control of "Safe Torque Off" function (SINAMICS SM150; SINAMICS GM150 on request) ... 26
7.3.2 L53 UPS for the power supply of the open-loop and closed-loop control (SINAMICS GM150) ... 26
7.3.3 L72 Braking Module ... 26
7.3.4 M11 Dust protection (air-cooled converters) ... 27
7.3.5 M16 Extended dust protection (SINAMICS GM150 in water-cooled IGBT versions) ... 27
7.3.6 N15 24-pulse Basic Line Module ... 27
7.3.7 M36 Brass cable entry for power cables (SINAMICS GM150, SINAMICS SM150 in the IGCT version) ... 27
7.3.8 S05 Industry sector neutral parameterization (SINAMICS SM150) ... 28
7.3.9 T58,T60, T80, T82, T85, T86, T90, T91 ~~Rating plate languages~~ Rating plate and warning label languages ... 28

8 Static excitation units ... 29

8.1 Static excitation units for brushless rotating reverse-field excitation ... 29
8.1.1 Technical data ... 29
8.1.2 Options ... 29

8.2 Static excitation units for slipring excitation ... 30
8.2.1 Options ... 30
8.2.2 Selection and ordering data ... 31
8.2.3 Technical data ... 32

9 Permissible cable lengths ... 34

9.1 With and without output reactor or dv/dt filter ... 34

9.2 Between line-side transformer and converter ... 35

© Siemens AG 2015

1 Newsletter "Medium voltage converters"

You can sign up to receive the newsletter on a regular basis at the following Internet address:
http://support.automation.siemens.com/WW/view/en/10804954/130000

After registration/login, by clicking on "Newsletter" in the "mySupport" window, you obtain a selection of documentation in the "Product Support" area (see the following screen shots).

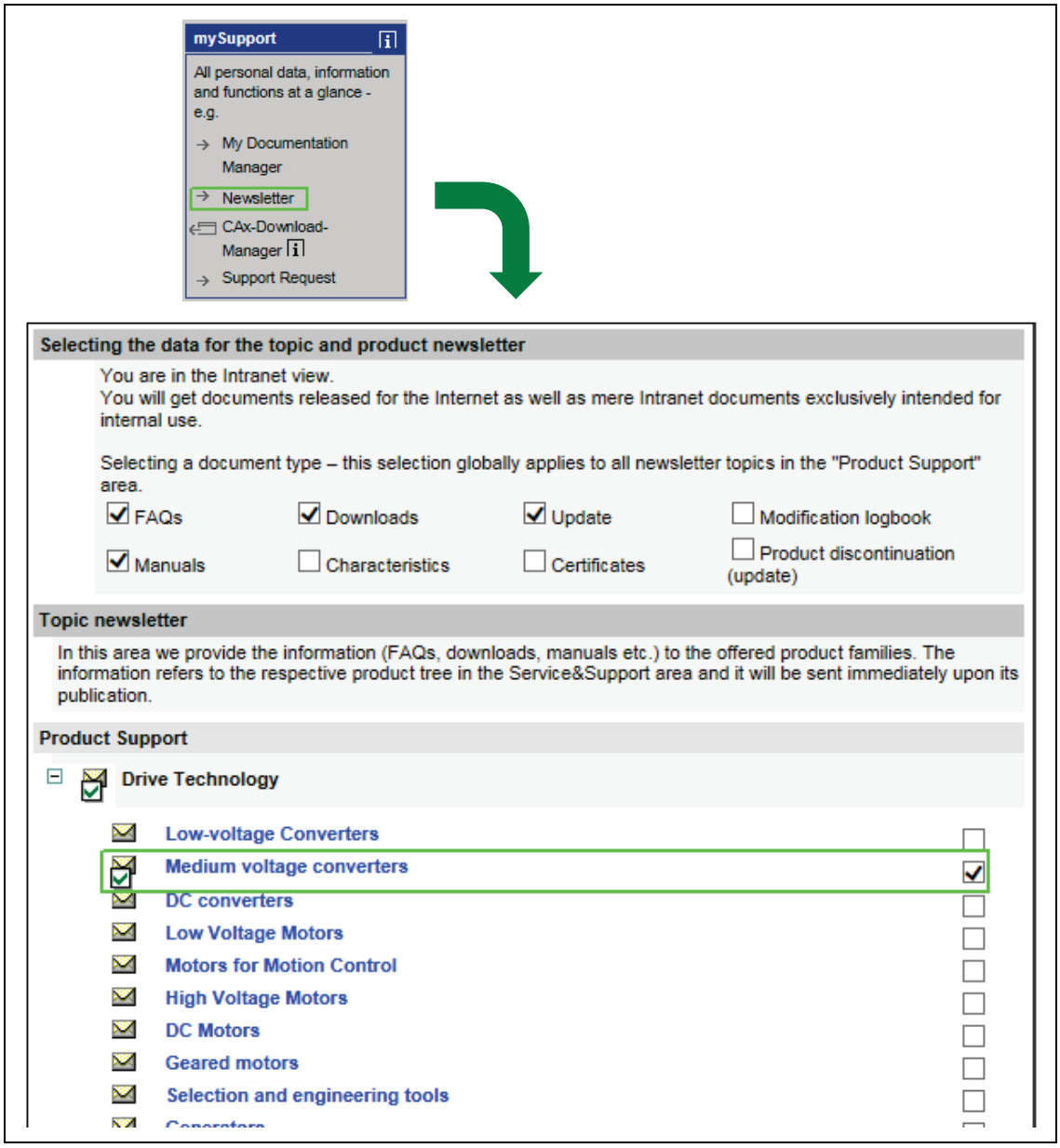

Figure 1-1 Screenshot: Register to subscribe to the "Medium-voltage converters" newsletter

© Siemens AG 2015

2 Corrections

Table 1-1 Corrections for the 2012 edition of catalog D 12

Page	Content of 2012 edition	Correction
2/11 3/9 4/9 5/12	Controlled motor feeder for auxiliaries 1) | | N Controlled motor feeder for auxiliaries 440/480 V 3 AC, max. 4/4.8 kW | N30 Controlled motor feeder for auxiliaries 440/480 V 3 AC, max. 7/8 kW | N31 Controlled motor feeder for auxiliaries 440/480 V 3 AC, max. 11/12.7 kW | N32 Controlled motor feeder for auxiliaries 440/480 V 3 AC, max. 15/17.5 kW | N33	Controlled motor feeder for auxiliaries 1) | | N Controlled motor feeder for auxiliaries 400/480 V 3 AC, max. 4/4.8 kW | N30 Controlled motor feeder for auxiliaries 400/480 V 3 AC, max. 7/8 kW | N31 Controlled motor feeder for auxiliaries 400/480 V 3 AC, max. 11/12.7 kW | N32 Controlled motor feeder for auxiliaries 400/480 V 3 AC, max. 15/17.5 kW | N33
2/19 3/15 4/14 5/18	**Other ambient conditions** **Operation** Biological ambient conditions in accordance with Class **3B2** … Chemically active substances in accordance with Class **3C2** …	 **3B1** … **3C1** …
3/17	**Deionized water requirement in l, approx.** 6SL3835-2LN41-8AA0 **135** 6SL3835-2LN42-8AA0 **170** 6SL3835-2LN43-6AA0 **170** 6SL3835-2LN44-2AA0 **255**	 **35** **70** **70** **105**
5/20 to 5/22	**Deionized water requirement in l, approx.** 6SL3845-7NN41-8AA0 **150** 6SL3845-7NN43-6AA0 **250** 6SL3845-7NN45-4AA0 **300** 6SL3845-7NN41-8AB0 **225** 6SL3845-7NN41-8AC0 **250** 6SL3845-7NN41-8AD0 **275** 6SL3845-7NN41-8AF0 **275** 6SL3845-7NN41-8AG0 **300** 6SL3845-7NN41-8AK0 **350** 6SL3845-7NN43-6AF0 **300** 6SL3845-7NN42-2AA0 **150** 6SL3845-7NN44-5AA0 **250** 6SL3845-7NN46-7AA0 **300**	 **50** **100** **150** **75** **100** **125** **125** **150** **175** **150** **50** **100** **150**
6/21	**K80** **Control of "Safe Torque Off" function (SINAMICS SM150; SINAMICS GM150 on request)** … In conjunction with external circuitry, the "Safe Torque Off" function has been certified by TÜV-Süd [German Technical Inspectorate] in accordance with EN ISO 13849-1 with Safety Category 3 and Performance Level d as well as EN 61508 (IEC 61508), Parts 1 to 4, SIL 2. …	 … In conjunction with external circuitry, the "Safe Torque Off" function has been certified by TÜV-Süd [German Technical Inspectorate] in accordance with EN ISO 13849-1 with Safety Category 3 and Performance Level d as well as EN 61508**:2000** (IEC 61508**:2000**), Parts 1 to 4, SIL 2 **(issue date of certificate: 2012-09-20)**. …

© Siemens AG 2015

Page	Content of 2012 edition	Correction
10/13	**Verlängerung der Mängelhaftung** … For all 4 and 5 year extension periods of the liability for defects (Q84/9LD1740-0AA48, Q85/9LD1740-0AA60), this is only possible in conjunction with a corresponding maintenance contract with regular inspections. This maintenance contract must be signed and concluded with the responsible service department. This must be documented using the EUNA procedure at www.siemens.com/euna, which must be performed by your local Siemens contact person.	… Explanation: Text is removed. The maintenance contract is no longer required for options Q84 and Q85. You can find current information on options Q80 to Q85 in the Internet at the following address: http://support.automation.siemens.com/WW/view/en/56715113

© Siemens AG 2015

3 SINAMICS GM150 in IGBT version

An overview of the modified article numbers for SINAMICS GM150 in the IGBT version is provided in the following pages; these should be taken into account in the selection and ordering data (catalog pages 2/8 and 2/9) – as well as in the technical data (starting from catalog page 2/24).

3.1 Modified article numbers for air cooling

Selection and ordering data

Table 3-1 SINAMICS GM150 in IGBT version, air cooling, without sine-wave filter

Type rating [kVA]	Shaft output		Rated output current [A]	Article No.	Circuit version in catalog
	[kW]	[hp]			
Output voltage 3.3 kV					
1000	850	1000	180	old: **6SL3810-2LN31-8AA0** new: **6SL3810-2LN31-8AA2**	1
1300	1050	1250	220	old: **6SL3810-2LN32-2AA0** new: **6SL3810-2LN32-2AA2**	1
1500	1250	1500	260	old: **6SL3810-2LN32-6AA0** new: **6SL3810-2LN32-6AA2**	1
1700	1400	2000	300	old: **6SL3810-2LN33-0AA0** new: **6SL3810-2LN33-0AA2**	1
2000	1650	2250	350	old: **6SL3810-2LN33-5AA0** new: **6SL3810-2LN33-5AA2**	1
2300	1900	2500	400	old: **6SL3810-2LN34-0AA0** new: **6SL3810-2LN34-0AA2**	1

Note

These changes are also applicable for article numbers of the corresponding versions with sine-wave filter.

© Siemens AG 2015

3.2 Modified article numbers for water cooling

Selection and ordering data

Table 3-2 SINAMICS GM150 in IGBT version, water cooling, without sine-wave filter

Type rating [kVA]	Shaft output		Rated output current [A]	Article No.	Circuit version in catalog
	[kW]	[hp]			
Output voltage 3.3 kV					
2000	1650	2250	350	old: 6SL3815-2LN33-5AA0 new: 6SL3815-2LN33-5AA2	1
2300	1900	2500	400	old: 6SL3815-2LN34-0AA0 new: 6SL3815-2LN34-0AA2	1
2600	2150	3000	450	old: 6SL3815-2LN34-5AA0 new: 6SL3815-2LN34-5AA2	1
2900	2400	3250	500	old: 6SL3815-2LN35-0AA0 new: 6SL3815-2LN35-0AA2	1
3100	2650	3500	550	old: 6SL3815-2LN35-5AA0 new: 6SL3815-2LN35-5AA2	1
3400	2800	3800	600	old: 6SL3815-2LN36-0AA1 new: 6SL3815-2LN36-0AA2	1
3800	3150	4200	660	old: 6SL3815-2LN36-6AA1 new: 6SL3815-2LN36-6AA2	1
4200	3500	4500	740	old: 6SL3815-2LN37-4AA0 new: 6SL3815-2LN37-4AA2	1
6300	5300	7000	2 x 550	old: 6SL3815-2LN41-1AA1 new: 6SL3815-2LN41-1AA2	3
6800	5600	7400	2 x 600	old: 6SL3815-2LN41-2AA1 new: 6SL3815-2LN41-2AA2	3
7400	6200	8000	2 x 650	old: 6SL3815-2LN41-3AA0 new: 6SL3815-2LN41-3AA2	3
8000	6700	9000	2 x 700	old: 6SL3815-2LN41-4AA0 new: 6SL3815-2LN41-4AA2	3

Note

These changes are also applicable for the article numbers of the corresponding versions with sine-wave filter.

© Siemens AG 2015

4 SINAMICS GM150 in IGCT version

In addition to the types listed in the catalog, an IGCT version with a type rating of 12000 kVA is available (marked in green in the following table). The corresponding change to the table on catalog page 3/7 can be taken from the following table.

Selection and ordering data

Table 4-1 SINAMICS GM150 in IGCT version (catalog page 3/7)

Type rating [kVA]	Shaft output [kW]	Shaft output [hp]	Rated output current for typical induction motors [A]	Max. thermal output current [A]	Max. motor short-circuit current for induction motors [A]	Article No.	#
Output voltage 3.3 kV							
10000	8000	11000	1750	1750	8700	6SL3835-2LN41-8AA0	7
12000[1)]	**9850[1)]**	**13200[1)]**	**2100**	**2100**	**8700**	**6SL3835-2LN42-1AA0**	**7**
15500	13000	17000	2 x 1360	2 x 1440	7200	6SL3835-2LN42-8AA0	9
18000	15000	20000	2 x 1570	2 x 1660	8300	6SL3835-2LN43-6AA0	9
21000	17000	23000	3 x 1220	3 x 1630	8100	6SL3835-2LN44-2AA0	10

 # = Circuit version in catalog

1) Full rated power for line undervoltage condition on request

© Siemens AG 2015

5 SINAMICS GM150 in IGCT Tandem version

The SINAMICS GM150 series has been extended by two water-cooled types in IGCT tandem version.

5.1 Overview

With the expansion of the power range of the SINAMICS GM150, drive applications can be equipped with up to 23 MW for a motor voltage of 6.6 kV.

This is achieved using well-proven SINAMICS GM150 IGCT medium-voltage drives, each with an output voltage of 3.3 kV with a phase offset of approx. 180° feeding an open 6.6 kV motor winding system.

The drive system, comprising two three-level inverters, behaves like a five-level converter and with 17 voltage levels connected to a motor winding generates almost sinusoidal motor currents.

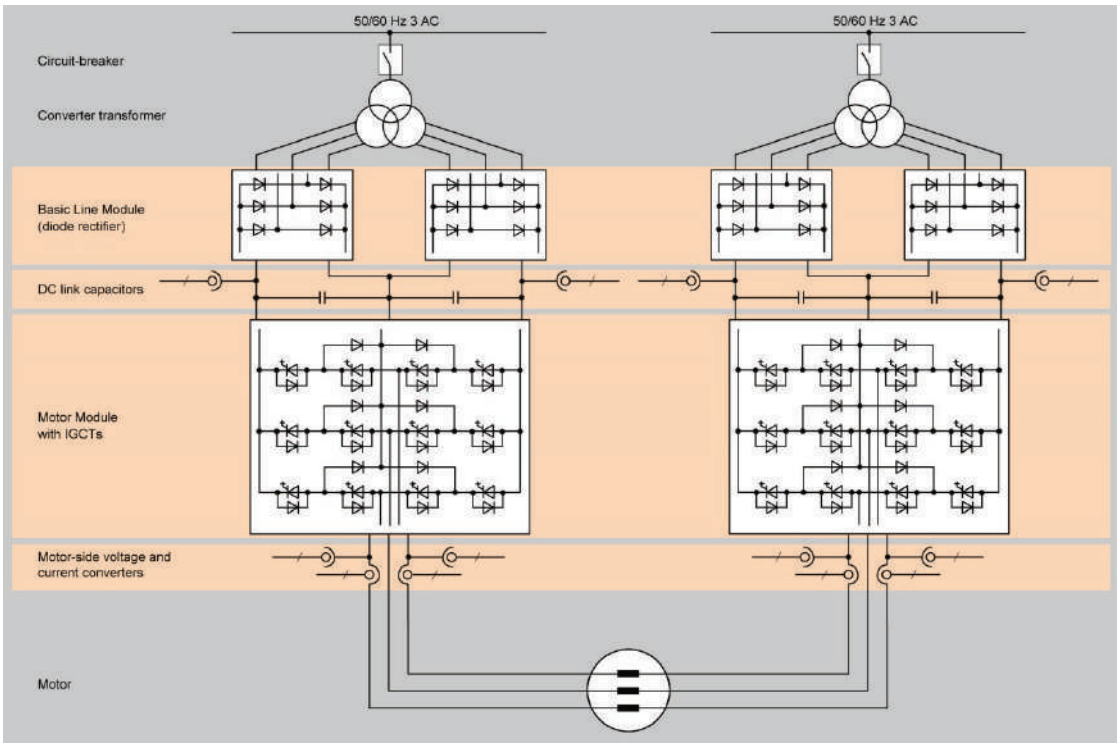

Figure 5-1 Block diagram tandem configuration

In the tandem configuration, two basic converter units feed a motor with an open winding system, so that the two converters with nominal voltage 3.3 kV each result in an insulation voltage of 6.6 kV. Hence the tandem version includes different components than the converter units in a basic or parallel circuit. The motor wiring cannot be changed in the tandem configuration.

© Siemens AG 2015

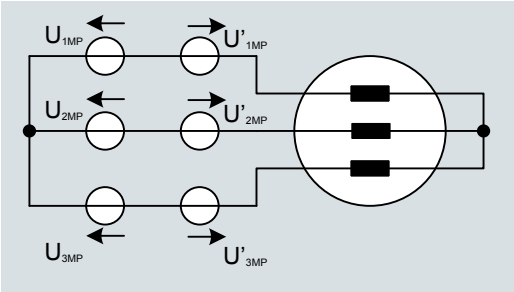

Figure 5-2 Equivalent circuit diagram of a tandem circuit

5.2 Options

The same options as for SINAMCIS GM150 in IGCT are available (refer to catalog pages 6/2 to 6/8).

However, the following options are only available on request:

- **B00** (NAMUR terminal strip)
- **E00 to E03** (Control options)
- **L48, L49** (Make-proof grounding switches)
- **L51** (Disconnector at converter output)
- **L52** (Circuit breaker at converter output)
- **L53** (UPS for the power supply of the open-loop and closed-loop control)
- **L72** (Braking Module)
- **M54** (IP54 degree of protection)
- **N13** (Circuit breaker at converter input)
- **Y73** (Braking resistor)

5.3 Selection and ordering data

Table 5-1 SINAMICS GM150 in IGCT tandem version, water cooling

Type rating **kVA**	**Rated output current** **A**	**Order No.**
Output voltage 2 x 3.3 kV		
20000	2 x 1750	**6SL3835-2LR41-8AT0** [1)]
24000	2 x 2100	**6SL3835-2LR42-1AT0**

1) On request

© Siemens AG 2015

5.4 Technical data

Table 5-2 SINAMICS GM150 in IGCT tandem version, water cooling

Rated data		Order number: 6SL3835-…	
		...-2LR41-8AT0 [1]	...-2LR42-1AT0
Output voltage	kV	2 x 3.3	2 x 3.3
Type rating	kVA	20000	24000
Rated output current	A	2 x 1750	2 x 2100
Shaft output	kW	16700 [2] 19300 [3]	20000 [2] 23100 [3]
	hp	22700 [2] 26200 [3]	27000 [2] 31400 [3]
Input voltage	kV	2 x (2 x 1,7)	2 x (2 x 1,7)
Rated input current	A	2 x (2 x 1570)	2 x (2 x 1970)
Power loss	kW	approx. 2 x 110	approx. 2 x 110
Efficiency	%	99.1	99.1
Typ. current demand of the auxiliary supply 230 V 1 AC 50/60 Hz	A	6	6
Max. current demand of the auxiliary supply 400 V 3 AC 50/60 Hz	A	20	20
Precharging current demand, briefly for approx. 25 s	A	40	40
Raw water flow rate	l/min	417	417
Deionized water requirement, approx.	l	170	170
Sound pressure level L_{pA} (1 m)	dB(A)	77	77
Measuring surface level L_S(1 m)	dB(A)	22	22
Cable cross-sections, line-side, max. connectable per phase	mm^2 (DIN VDE)	6 x 240	6 x 240
	AWG/MCM (NEC,CEC)	6 x 500 MCM	6 x 500 MCM
Cable cross-sections, motor-side, max. connectable per phase	mm^2 (DIN VDE)	6 x 240	6 x 240
	AWG/MCM (NEC,CEC)	6 x 500 MCM	6 x 500 MCM
PE connection, max. connection cross-section at the enclosure with M12 screw	mm^2 (DIN VDE)	2 x 3 x 120	2 x 3 x 120
	AWG/MCM (NEC,CEC)	2 x 3 x 250 MCM	2 x 3 x 250 MCM
Degree of protection	–	IP43	IP43
Dimensions Width Height Depth	 mm mm mm	 9400 2830 1600	 9400 2830 1600
Weight	kg	9900	9900

1) *On request*
2) *Power for operation of induction motors with typical power factor $(\cos \varphi)_{motor}$ = 0.88 and efficiency η_{motor} = 0.96*
3) *Power for operation of synchronous motors with typical power factor $(\cos \varphi)_{motor}$ = 1.0 and efficiency η_{motor} = 0.96*

© Siemens AG 2015

6 SINAMICS SM150

6.1 SIMATIC HMI TP900 Comfort operator panel

The SIMATIC OP 177B operator panel for SINAMICS SM150 is replaced by the new SIMATIC HMI TP900 Comfort panel.

Note

This change involves catalog pages 4/6 and 5/9.

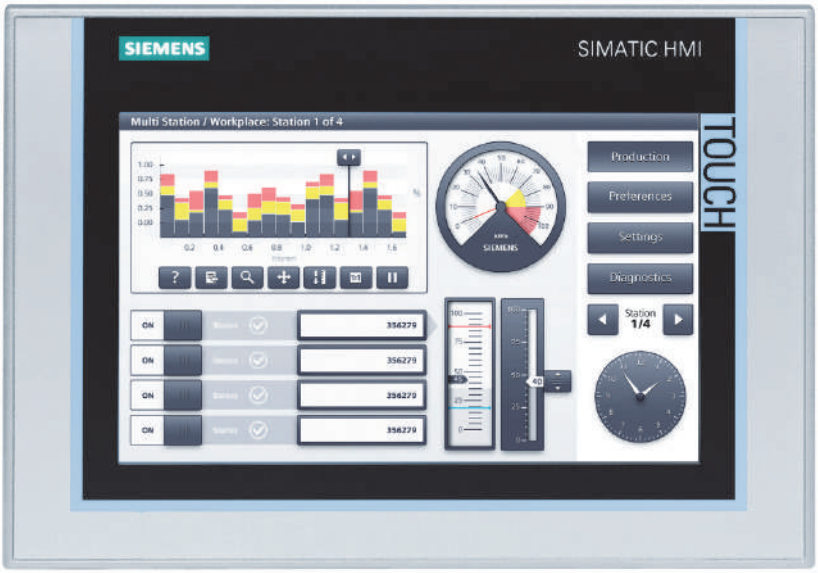

Figure 6-1 SIMATIC HMI TP900 Comfort

The SIMATIC HMI TP900 Comfort operator panel with touchscreen is integrated in the cabinet door of the SINAMICS SM150. It is used for operating, monitoring and parameterizing.

It sets itself apart as a result of the following features.

Table 6-1 Features of the SIMATIC HMI TP900 Comfort

Display	9,0" widescreen TFT display, 16 million colors
Resolution	800 x 480 px
Operator controls	Touchscreen
Interfaces	USB port in the cabinet door (e.g. to download trace files)

© Siemens AG 2015

7 Options

7.1 New options

7.1.1 G51 to G54 TM150 Terminal Module, temperature sensor evaluation units (SINAMICS GM150; SINAMICS SM150 on request)

Overview

With options G51 to G54, one to four TM150 Terminal Modules can be ordered for evaluation of several temperature sensors.

Table 2-1 Options G51 to G54

Order code	Option
G51	1 x TM150 temperature sensor evaluation unit
G52	2 x TM150 temperature sensor evaluation units
G53	3 x TM150 temperature sensor evaluation units
G54	4 x TM150 temperature sensor evaluation units

The TM150 Terminal Module is a DRIVE-CLiQ component for temperature evaluation. The temperature is measured in a temperature range from –99 °C to +250 °C for the following temperature sensors:

- Pt100 (with monitoring for open-circuit and short-circuit)
- Pt1000 (with monitoring for open-circuit and short-circuit)
- KTY84 (with monitoring for open-circuit and short-circuit)
- PTC (with short-circuit monitoring)
- Bimetallic NC contact (without monitoring)

For the temperature sensor inputs, for each terminal block the evaluation can be parameterized for 1x2-wire, 2x2-wire, 3-wire or 4-wire. There is no galvanic isolation in the TM150.

The temperature channels of a TM150 can be subdivided into three groups and evaluated together.

Note

With the introduction of the options G51 to G54 described above, options L80 to L82 (thermistor protection relays) and L90 to L94 (Pt100 evaluation units) are not available anymore.

This also involves catalog pages 2/11, 3/9, 4/9, 5/12, 6/5 f and 6/28 ff.

© Siemens AG 2015

Design

The following are located on the TM150 Terminal Module:

- 6 to 12 temperature sensor inputs
- 2 DRIVE-CLiQ sockets

The status of the TM150 Terminal Module is indicated via a multi-color LED.

Note
The TM150 Terminal Modules need to be configured with the STARTER commissioning tool. This can be used to define grouping of temperature channels and temperature limits as well as the corresponding drive response.

Technical data

Table 7-2 TM150 technical data

TM150 Terminal Module	
Current requirement, max. at 24 V DC • Conductor cross-section, max. • Fuse protection, max.	0.5 A 2.5 mm^2 20 A
Temperature sensor inputs The inputs can be parameterized individually for the evaluation of sensors. • Conductor cross-section, max. • Measuring current per sensor, approx.	 1.5 mm^2 0.8 mA
PE connection	M4 screw
Dimensions • Width • Height • Depth	 30 mm 150 mm 119 mm
Weight, approx.	0.41 kg

© Siemens AG 2015

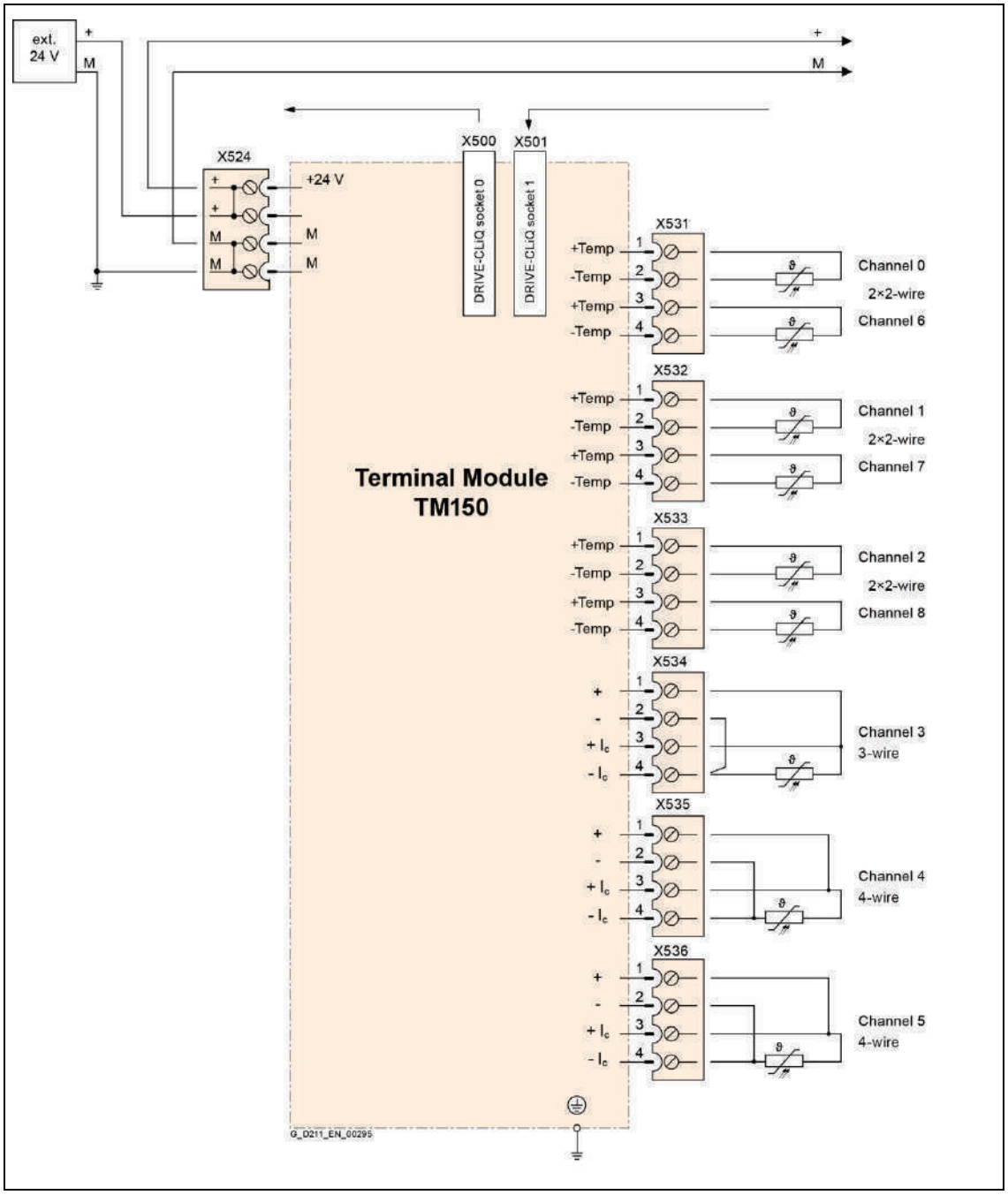

Figure 2-1 Connection example of a TM150 Terminal Module

7.1.2 K66
Power section with internal cooling (SINAMICS GM150 in water-cooled IGBT version; SINAMICS GM150 and SINAMICS SM150 in IGCT version on request)

When using option K66, the power sections can be operated without having to feed in external cooling air. They have internal air circulation with an air-water heat exchanger, and they have no air ventilation slots.

When using option K66, the impact of damaging environmental effects in operation is restricted to a safe level. The following list provides an overview of the relevant environmental effects:

- Heat
- Ingress of chemicals (soot and sulfur)
- Moisture
- Ingress of damaging substances (conductive dusts)

Note

Within the context of the environmental conditions specified in the catalog, the environmental effects mentioned above are not damaging. However, if the limit values of the corresponding environmental classes can be exceeded, then option K66 should be selected for the converter.

During storage and transport, option K66 does not provide any protection against damaging environmental effects.

Note

The degree of protection can be increased to IP44 by selecting option K66.

Note

- When option K66 is selected, the deionized water requirement of the cooling unit is greater than that specified in the technical data. The additional deionized water requirement is as follows:
  – for single circuit configurations: 12 l
  – for parallel circuit configurations: 18 l
- Option K66 cannot be combined with option M61 (redundant fan in the power unit) or Y26 (pre-magnetizing unit), and an inquiry is required in conjunction with options N15 (24-pulse Basic Line Module) and N16 (36-pulse Basic Line Module).

© Siemens AG 2015

7.1.3 L10 dv/dt filter (SINAMICS GM150 in IGCT version, SINAMICS SM150 in IGCT version)

Overview

The converter generates pulses at the output that stress the motor insulation. The dv/dt filter limits the voltage gradients at the converter output to max. 1 kV/µs and simultaneously reduces the capacitive charge/discharge currents of motor cables.

Design

The dv/dt filter is water-cooled and integrated in the Motor Module (see following diagram).

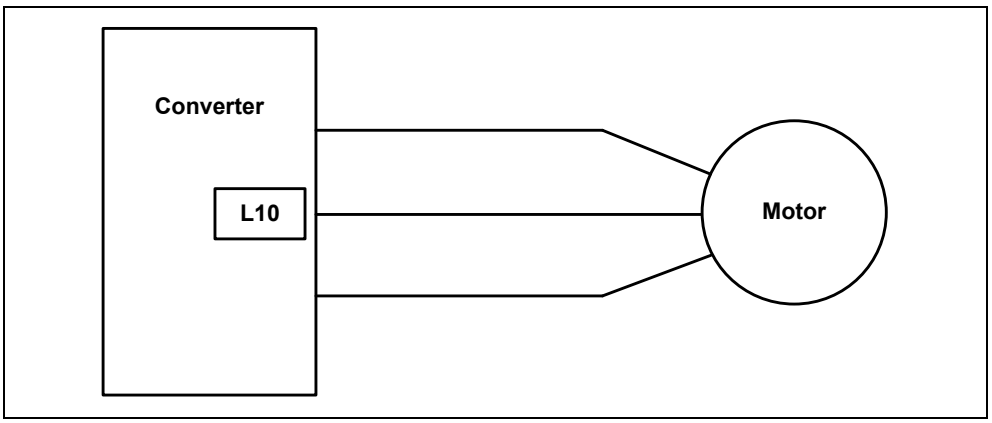

Figure 2-2 Block diagram option L10

Note

Using option L10, the following restrictions apply:

- The maximum pulse frequency of the converter is 200 Hz.
- The deionized water requirement of the cooling unit is 4 l higher than specified in the technical data.
- The output currents must be limited according to the following table.

© Siemens AG 2015

Table 2-3 Reduction of the output current using option L10

Order No.	Rated output current without L10 A	Rated output current with L10 A
SINAMICS GM150 in IGCT version		
6SL3835-2LN41-8AA0	1750	1680
6SL3835-2LN42-8AA0	2 x 1360	2 x 1360
6SL3835-2LN43-6AA0	2 x 1570	2 x 1570
6SL3835-2LN44-2AA0	3 x 1220	3 x 1220
6SL3835-2LR41-8AT0	2 x 1750	2 x 1680
6SL3835-2LR42-1AT0	2 x 2100	2 x 2030
SINAMICS SM150 in IGCT version		
6SL3845-7NN41-8AA0	1750	1680
6SL3845-7NN43-6AA0	2 x 1750	2 x 1680
6SL3845-7NN45-4AA0	3 x 1750	3 x 1680
6SL3845-7NN41-8AB0	2 x 1750	2 x 1680
6SL3845-7NN41-8AC0	3 x 1750	3 x 1680
6SL3845-7NN41-8AD0	4 x 1750	4 x 1680
6SL3845-7NN41-8AF0	3 x 1750	3 x 1680
6SL3845-7NN41-8AG0	4 x 1750	4 x 1680
6SL3845-7NN41-8AK0	5 x 1750	5 x 1680
6SL3845-7NN43-6AF0	1 x (2 x 1750) + 2 x 1750	1 x (2 x 1680) + 2 x 1680
6SL3845-7NN42-2AA0	1850	1780
6SL3845-7NN44-5AA0	2 x 1850	2 x 1780
6SL3845-7NN46-7AA0	3 x 1850	3 x 1780

7.1.4 M44 IP44 degree of protection (SINAMICS GM150 in water-cooled version and SINAMICS SM150 in IGCT version)

The degree of protection of the water-cooled converter can be increased by selecting option M44 (IP43 degree of protection as standard).

© Siemens AG 2015

7.1.5 N16
36-pulse Basic Line Module (SINAMICS GM150; IGCT version on request)

For the highest requirements regarding low line harmonics, the SINAMICS GM150 converters can be equipped with a 36-pulse Basic Line Module.

Notice

With option N16 the cabinet width increases as follows:

- SINAMICS GM150 in the IGBT version, single circuit configurations: 1200 mm
- SINAMICS GM150 in the IGBT version, parallel circuit configurations: 600 mm

Note

- With option N16, the deionized water requirement of the cooling unit is 14 l higher than that specified in the technical documentation.
- In conjunction with options L72 (Braking Module) and K66 (power section with internal cooling) as well as for SINAMICS GM150 in IGCT version, an inquiry is required for option N16.

7.1.6 U03
CSA certificate (on request)

With option U03, the converter is individually certified according to CSA Group (Canadian Standards Association).

Note

When selecting option U03, a purely mechanical door locking system is required. This can be ensured with option M10 (Safety interlocking system).

7.1.7 Y26
Premagnetizing unit (SINAMICS GM150; on request)

Option Y26 allows the line transformer to be premagnetized to limit the inrush current.

© Siemens AG 2015

7.2 Options with changed availability

7.2.1 E82
Increased frequency (converter for high-speed rotors)

Option E82 is no longer available.

Note
This change involves catalog pages 6/3 and 6/12.

7.2.2 G20 to G24
Access to other bus systems

The options G20 to G24 are available without request now. The resulting changes for SINAMICS GM150 in IGBT and IGCT version can be seen in the following overview by means of the related excerpt of catalog page 6/4.

Table 2-4 Availability of options G20 to G24

Version released 2012			
Order code	Option	SINAMICS GM150 IGBT version	SINAMICS GM150 IGCT version
G20	CAN bus interface	On request	On request
G21	Modbus Plus interface	On request	On request
G22	Modbus RTU slave interface	On request	On request
G23	DeviceNet interface	On request	On request
G24	PROFINET interface (via CBE20)	On request	On request
New			
G20	CAN bus interface	✓	✓
G21	Modbus Plus interface	✓	On request
G22	Modbus RTU slave interface	✓	✓
G23	DeviceNet interface	✓	On request
G24	PROFINET interface (via CBE20)	✓	On request

Note
These changes also involve catalog pages 2/12, 3/10 and 6/15.

© Siemens AG 2015

7.2.3 L08 Output reactor

The option L08 is only available for the IGBT versions of SINAMICS GM150 and SINAMICS SM150 now. For the IGCT versions of the converters, option L10 (dv/dt filter) is available (refer to section 7.1.3).

Table 7-5 Availability of option L08 (catalog page 6/5)

Version released 2012					
Order code	Option	SINAMICS GM150		SINAMICS SM150	
		IGBT version	IGCT version	IGBT version	IGCT version
L08	Output reactor	✓	✓	✓	✓
New					
L08	Output reactor	✓	–	✓	–

Note
This change also involves catalog pages 3/8, 5/11 and 6/22.

7.2.4 L53 UPS for the for the power supply of the open-loop and closed-loop control (SINAMICS GM150)

Effective immediately, an inquiry is no longer required for option L53.

Table 7-6 Availability of option L53 (catalog page 6/5)

Version released 2012					
L53	UPS for the power supply of the open-loop and closed-loop control	On request	On request	–	–
New					
L53	UPS for the power supply of the open-loop and closed-loop control	✓	✓	–	–

© Siemens AG 2015

7.2.5 Y15 Sine-wave filter

For the converter types marked in red in the following reproduction of catalog page 2/9, option Y15 (sine-wave filter) is not available anymore with immediate effect.

© Siemens AG 2012

SINAMICS GM150
Medium-Voltage Converter

SINAMICS GM150 in IGBT version

2

Selection and ordering data

Type rating kVA	Shaft output kW	Shaft output hp	Rated output current A	SINAMICS GM150 as IGBT version, water cooling, without sine-wave filter Order No.	Circuit version (page 2/4) Fig. No.
Output voltage 2.3 kV					
2000	1650	2250	500	6SL3815-2LM35-0AA0	①
2200	1800	2500	550	6SL3815-2LM35-5AA0	①
2400	2000	2750	600	6SL3815-2LM36-0AA1	①
2600	2150	2950	660	6SL3815-2LM36-6AA1	①
2900	2450	3250	740	6SL3815-2LM37-4AA0	①
3200	2650	3500	800	6SL3815-2LM38-0AA0	①
3500	2900	3850	880	6SL3815-2LM38-8AA1	①
4000	3300	4400	1000	6SL3815-2LM41-0AA1	①
Output voltage 3.3 kV					
2000	1650	2250	350	6SL3815-2LN33-5AA0	①
2300	1900	2500	400	6SL3815-2LN34-0AA0	①
2600	2150	3000	450	6SL3815-2LN34-5AA0	①
2900	2400	3250	500	6SL3815-2LN35-0AA0	①
3100	2650	3500	550	6SL3815-2LN35-5AA0	①
3400	2800	3800	600	6SL3815-2LN36-0AA1	①
3800	3150	4200	660	6SL3815-2LN36-6AA1	①
4200	3500	4500	740	6SL3815-2LN37-4AA0	①
4600	3800	5000	800	6SL3815-2LN38-0AA0	①
5100	4250	6000	880	6SL3815-2LN38-8AA1	①
5700	4700	6150	1000	6SL3815-2LN41-0AA1	①
6300	5300	7000	2 × 550	6SL3815-2LN41-1AA1	③
6800	5600	7400	2 × 600	6SL3815-2LN41-2AA1	③
7400	6200	8000	2 × 650	6SL3815-2LN41-3AA0	③
8000	6700	9000	2 × 700	6SL3815-2LN41-4AA0	③
9100	7600	10200	2 × 800	6SL3815-2LN41-6AA1	③
10300	8600	11500	2 × 900	6SL3815-2LN41-8AA1	③
Output voltage 4.16 kV					
2000	1700	2250	280	6SL3815-2LP32-8AA0	①
2200	1850	2500	310	6SL3815-2LP33-1AA0	①
2500	2100	2750	350	6SL3815-2LP33-5AA0	①
2900	2400	3000	400	6SL3815-2LP34-0AA0	①
3200	2700	3500	450	6SL3815-2LP34-5AA0	①
3600	3000	4000	500	6SL3815-2LP35-0AA0	①
4000	3300	4500	550	6SL3815-2LP35-5AA0	①
4300	3600	4850	600	6SL3815-2LP36-0AA1	①
4800	4000	5450	660	6SL3815-2LP36-6AA1	①
5300	4500	6000	740	6SL3815-2LP37-4AA0	①
5800	4800	6500	800	6SL3815-2LP38-0AA0	①
6400	5300	7150	880	6SL3815-2LP38-8AA1	①
7200	5900	8000	1000	6SL3815-2LP41-0AA1	①
7900	6600	9000	2 × 550	6SL3815-2LP41-1AA1	③
8600	7150	9500	2 × 600	6SL3815-2LP41-2AA1	③
9400	7900	10000	2 × 650	6SL3815-2LP41-3AA0	③
10100	8500	11000	2 × 700	6SL3815-2LP41-4AA0	③
11500	9600	13000	2 × 800	6SL3815-2LP41-6AA1	③
13000	11250	15300	2 × 900	6SL3815-2LP41-8AA1	③

Type rating kVA	Shaft output kW	Shaft output hp	Rated output current A	SINAMICS GM150 as IGBT version, water cooling, with sine-wave filter Order No.	Circuit version (page 2/5) Fig. No.
Output voltage 2.3 kV					
1500	1250	1500	380	6SL3815-2LM35-0AA0-Z Y15	④
1650	1350	1750	410	6SL3815-2LM35-5AA0-Z Y15	④
2150	1790	2400	540	6SL3815-2LM36-0AA1-Z Y15	④
2200	1850	2500	550	6SL3815-2LM37-4AA0-Z Y15	④
2350	1950	2550	590	6SL3815-2LM36-6AA1-Z Y15	④
2400	2000	2750	600	6SL3815-2LM38-0AA0-Z Y15	④
Output voltage 3.3 kV					
1550	1300	1750	270	6SL3815-2LN33-5AA0-Z Y15	④
1750	1450	2000	310	6SL3815-2LN34-0AA0-Z Y15	④
2000	1650	2250	350	6SL3815-2LN34-5AA0-Z Y15	④
2150	1800	2500	380	6SL3815-2LN35-0AA0-Z Y15	④
2350	1950	2750	410	6SL3815-2LN35-5AA0-Z Y15	④
3100	2550	3400	540	6SL3815-2LN36-0AA1-Z Y15	④
3200	2700	3500	560	6SL3815-2LN37-4AA0-Z Y15	④
3400	2800	3700	590	6SL3815-2LN36-6AA1-Z Y15	④
3500	2900	4000	610	6SL3815-2LN38-0AA0-Z Y15	④
5500	4550	6000	960	6SL3815-2LN41-1AA1-Z Y15	⑥
5600	4700	6250	980	6SL3815-2LN41-3AA0-Z Y15	⑥
6050	5100	6500	1060	6SL3815-2LN41-4AA0-Z Y15	⑥
6100	5100	7000	1080	6SL3815-2LN41-2AA1-Z Y15	⑥
Output voltage 4.16 kV					
1600	1300	1750	220	6SL3815-2LP32-8AA0-Z Y15	④
1750	1450	2000	240	6SL3815-2LP33-1AA0-Z Y15	④
1950	1600	2250	270	6SL3815-2LP33-5AA0-Z Y15	④
2250	1850	2500	310	6SL3815-2LP34-0AA0-Z Y15	④
2500	2100	2750	350	6SL3815-2LP34-5AA0-Z Y15	④
2800	2350	3000	390	6SL3815-2LP35-0AA0-Z Y15	④
3100	2600	3500	430	6SL3815-2LP35-5AA0-Z Y15	④
3900	3250	4450	540	6SL3815-2LP36-0AA1-Z Y15	④
4100	3450	4500	570	6SL3815-2LP37-4AA0-Z Y15	④
4250	3550	4750	590	6SL3815-2LP36-6AA1-Z Y15	④
4500	3800	5000	625	6SL3815-2LP38-0AA0-Z Y15	④
7150	5900	7950	960	6SL3815-2LP41-1AA1-Z Y15	⑥
7350	6200	8000	1020	6SL3815-2LP41-3AA0-Z Y15	⑥
7700	6350	8600	1080	6SL3815-2LP41-2AA1-Z Y15	⑥
7950	6600	9000	1100	6SL3815-2LP41-4AA0-Z Y15	⑥

The order code **Y15** (sine-wave filter) must be additionally specified and requires plain text
(see Description of the options, Page 6/42).

© Siemens AG 2015

7.3 Updated option descriptions

7.3.1 K80
Control of "Safe Torque Off" function (SINAMICS SM150; SINAMICS GM150 on request)

The description of option K80 has to be supplemented as follows.

Note

When option K80 is selected, only DRIVE-CLiQ cables with a maximum length of 30 m can be used.

7.3.2 L53
UPS for the power supply of the open-loop and closed-loop control (SINAMICS GM150)

The description of option L53 has to be supplemented as follows.

Caution

The battery to supply the UPS is no longer supplied, and must be ordered before commissioning starts. This avoids deep discharge when longer transport and storage times are involved.

Battery article number: 6SL3988-6YX00-0AA0

7.3.3 L72
Braking Module

The description of option L72 has to be supplemented as follows.

Note

- With option L72 the deionized water requirement of the cooling unit is higher than that specified in the technical data. The additional deionized water requirement is as follows:
  – for 12-pulse Basic Line Modules: 4 l
  – for 24-pulse Basic Line Modules: 8.5 l
- The maximum cable lengths between the Braking Module and the braking resistor depends on the specific plant or system and can be derived from the condition L/R < 20 µs considering the formula L' = L/a for the inductance per length. The maximum cable length a then is: a < 20 µs · R/L'
  Example:
  For a braking resistor with 9.5 Ω and an inductance per unit length of 0.25 mH/km, the maximum cable length is 760 m. As a consequence, the braking resistor can be located less than 380 m away when using a single cable (routing in both directions). When two cables in parallel are used, the length is doubled, as the inductance is halved.

© Siemens AG 2015

7.3.4 M11
Dust protection (air-cooled converters)

The description of option M11 has to be supplemented as follows.

Note
To protect the converter if high levels of dust are present, it is recommended to order option M11 for steel, rolling mill and cement plant applications.

7.3.5 M16
Extended dust protection (SINAMICS GM150 in water-cooled IGBT versions)

The description of option M16 has to be supplemented as follows.

Note
When selecting option M66 (suitable for marine duty), we recommend that option M16 is simultaneously ordered.

7.3.6 N15
24-pulse Basic Line Module

The description of option N15 has to be supplemented as follows.

Note
With option N15 the deionized water requirement of the cooling unit is 6 l higher than that specified in the technical data.

7.3.7 M36
Brass cable entry for power cables (SINAMICS GM150, SINAMICS SM150 in the IGCT version)

The description of option M36 has to be supplemented as follows.

Note
1.5 mm thick brass plate is used for the cable entry.

© Siemens AG 2015

7.3.8 S05
Industry sector neutral parameterization (SINAMICS SM150)

The description of option S05 has been modified as follows.

With option S05, an industry sector neutral parameterization for SINAMCIS SM150 is provided. Using this parameterization, the converter can be integrated into the system environment (e.g. control of circuit breakers, brakes, motor protection, etc.). Important drive parameters are already preset.

7.3.9 T58,T60, T80, T82, T85, T86, T90, T91
~~Rating plate languages~~
Rating plate and warning label languages

The description of options T58 up to T91 on catalog page 6/40 has to be adapted as follows.

The rating plate ~~is~~ **and the warning labels are** normally supplied in two languages (English/German). Other languages can be ordered using the codes below.

Table 7-7 Options T58 to T91

Option	Option
T58	Rating plate **and warning labels** in English/French
T60	Rating plate **and warning labels** in English/Spanish
T80	Rating plate **and warning labels** in English/Italian
T82	Rating plate **and warning labels** in English/Portuguese (on request)
T85	Rating plate **and warning labels** in English/Russian (on request)
T86	Rating plate **and warning labels** in English/Polish (on request)
T90	Rating plate **and warning labels** in English/Japanese (on request)
T91	Rating plate **and warning labels** in English/Chinese (on request)

Note
These changes also involve catalog pages 2/15, 3/12, 4/11, 5/15 and 6/8.

© Siemens AG 2015

8 Static excitation units

The following tables show an update of the data for the static excitation units.

8.1 Static excitation units for brushless rotating reverse-field excitation

8.1.1 Technical data

Table 4-1 Technical data for rotating reverse-field excitation (catalog page 7/6); **changes marked in green**

Brushless rotating reverse-field excitation		**6RN7030-…**		**6RN7031-…**
		…-1RH31-3AA0 **…-1RF31-3AA0**	**…-2RH32-5AA0** **…-2RF32-5AA0**	**…-1RH32-5AA0-Z M66** **…-1RF32-5AA0-Z M66**
…	…	…	…	…
Dimension (with doors and panels)				
Width	mm	**620**	**1220**	**620**
Height	mm	2300	2300	**2220**
Depth	mm	**655**	**655**	**655**
Weight	kg	300	400	300

8.1.2 Options

New options

K66
Power unit with internal cooling

For a description, see section 7.1.2 (note regarding options M61, Y26, N15 and N16 for excitation equipment is not relevant).

Note: Option K66 is only available for excitation units 6RN7031-1RH32-5AA0-Z and 6RN7031-1RF32-5AA0-Z.

L88
Ground fault monitoring with analog output

Option L88 provides integrated ground fault monitoring with analog output for the excitation circuit.

When compared to option L87, the insulation monitoring device offers the following additional functions:

- Memory with real-time clock to save alarm messages with date/time (historical data)
- Electrically isolated RS 485 port for data exchange (BMS protocol)
- Line isolating relay to operate several ground fault monitors in coupled IT systems
- 0/4 to 20 mA current output (electrically isolated)

© Siemens AG 2015

8.2 Static excitation units for slipring excitation

8.2.1 Options

New options

A70
Thermo switch for the de-excitation resistor

With option A70, the de-excitation resistor is equipped with an additional thermo switch, and is monitored by the SICROWBAR overvoltage protection.

When the de-excitation resistor is overloaded, the SICROWBAR overvoltage protection initiates an EMERGENCY STOP (disconnects the voltage) in the excitation converter.

C60
Rated line frequency 60 Hz

The option C60 must be selected, if the line frequency of the armature and auxiliary circuits is 60 Hz instead of 50 Hz. The motor protection circuit breaker of the unit fan is adapted appropriately.

G24
PROFINET interface (via CBE20)

Option G24 includes the SINAMICS Communication Board CBE20 for connection to PROFINET.

L06
Internal generation of 24 V DC

The option L06 includes the internal generation of the 24 V DC supply voltage from the auxiliary 230 V 1 AC, 50/60 Hz voltage supply using a switched-mode power supply.

L88
Ground fault monitoring with analog output

See section 8.1.2 for a description.

Updated option description

Y17
Line reactor

The statements of footnote 2) for option Y17 on catalog page 7/7 change as follows:

2) The option Y17 is only available for the excitation units 6RN8011-2SE41-2AA0 and 6RN8011-5SE36-0AA0. With option Y17, the cabinet size can vary depending on the reactor and the continuous rated current can be smaller as given in the following tables.

© Siemens AG 2015

8.2.2 Selection and ordering data

Table 4-2 Selection and ordering data for slipring excitation (catalog page 7/7); **changes marked in green**

Continuous rated current A	**Supply voltage V**	**Comment**	**Excitation unit** Order No.
500	400 3 AC	**On request**	**6RN8011**-5SE36-0AA0
500	460 3 AV	**Suitable for marine use with type certificate; on request**	**6RN8011-7**SE34-0AA0
1050	460 3 AC	–	**6RN8011**-2SE41-2AA0
1050	460 3 AC	Compact	**6RN8011**-3SE41-2AA0
1700	830 3 AC	–	**6RN8011**-0SJ42-0AA0
1800	6903 AC	–	**6RN8011**-1SH42-0AA0
1900	950 3 AC	–	**6RN8011**-6SK42-2AA0
1100	**690 3 AC**	**Fuseless; on request**	**6RN8011**-4SH41-1AA0

© Siemens AG 2015

8.2.3 Technical data

Table 4-3 Technical data for slipring excitation (catalog page 7/11); **changes marked in green**

Slipring excitation		**6RN8011-…**			
		…-5SE36-0AA0[1]	**…-7SE34-0AA0**[2]	**…-2SE41-2AA0**	**…-3SE41-2AA0**
Continuous rated current	A	**500**	**500**	**1050**	**1050**
Duty cycle 20 s / 280 s	**A**	**600/450**	**600/450**	**1200/1000**	**1200/1000**
Supply voltage	V	3 AC 400	3 AC 460	3 AC 460	3 AC 460
Voltage range	%	–20 … +15	–20 … +15	–20 … +15	–20 … +15
Rated supply frequency	Hz	50/60	50/60	50/60	50/60
Frequency range	Hz	45 … 65	45 … 65	45 … 65	45 … 65
Power loss at continuous rated current **(SINAMICS DC MASTER)**	kW	1.8	1.8	**4.3**	**4.3**
Electronics power supply	–	1 AC 230 V, 2 A	**1 AC 230 V, 2 A**	1 AC 230 V, 2 A	1 AC 230 V, 2 A
Fan power supply	–	3 AC 400 V, 50 Hz, **0.23 A** 3 AC 460 V, 60 Hz, **0.26 A**	3 AC 400 V, 50 Hz, **0.23 A** 3 AC 460 V, 60 Hz, **0.26 A**	1 AC 230 V, 50/60 Hz, **0.51/0.72 A**	1 AC 230 V, 50/60 Hz, **0.51/0.72 A**
Max. current demand of the auxiliary supply 1 AC 50/60 Hz 230 V [3]	A	2.5	16	5.1	5.1
Max. current demand of the auxiliary supply 3 AC 50/60 Hz 400 V	A	Plant-specific, typical 50	6	–	–
Cooling air flow rate	m^3/s	**0.15**	**0.15**	**0.28**	**0.28**
Sound pressure level L_{pA} (1 m)	dB(A)	< 73	< 76	< 76	< 76
Measuring surface level L_S(1 m)	dB(A)	17	17	17	16
Cable cross-sections line-side, max. connectable per phase	mm^2 (DIN VDE)	2 x 185	1 x 95	4 x 240	4 x 240
	AWG/MCM (NEC,CEC)	2 x 350 MCM	1 x 3/0 AWG	4 x 500 MCM	4 x 500 MCM
Cable cross-sections motor-side, max. connectable per phase	mm^2 (DIN VDE)	2 x 240	2 x 95	4 x 240	4 x 240
	AWG/MCM (NEC,CEC)	2 x 500 MCM	2 x 3/0 AWG	4 x 500 MCM	4 x 500 MCM
PE connection, max. connection cross-section at enclosure with M12 screw	mm^2 (DIN VDE)	1 x 185	1 x 50	2 x 240	2 x 240
	AWG/MCM (NEC,CEC)	1 x 350 MCM	1 x 1/0 AWG	2 x 500 MCM	2 x 500 MCM
Degree of protection	–	IP23	IP44	IP23	IP23
Dimension (with doors and panels)					
Width	mm	**1220**	**1220**	**620**	**620**
Height	mm	**2310**	**2210**	**2310**	**2310**
Depth	mm	**675**	**675**	**1330**	**675** (compact)
Weight	kg	550	**550**	**900**	450

1) On request

2) Suitable for marine use with type certificate; on request

3) Data without taking options into account

© Siemens AG 2015

Table 4-4 Technical data for slipring excitation (catalog page 7/12); **changes marked green**

Slipring excitation		**6RN8011-…**			
		…-0SJ42-0AA0	**…-1SH42-0AA0**	**…-6SK42-2AA0**	**…-4SH41-1AA0[1)]**
Continuous rated current	A	1700	1800	1900	**1100**
Duty cycle 20 s / 280 s	**A**	**1900/1500**	**2000/1500**	**2200/1500**	**–**
Supply voltage	V	3 AC 830	3 AC 690	3 AC 950	**3 AC 690**
Voltage range	%	–20 … +10	–20 … +10	–20 … +15	**–20 … +15**
Rated supply frequency	Hz	50/60	50/60	50/60	**50/60**
Frequency range	Hz	45 … 65	45 … 65	45 … 65	**45 … 65**
Powerloss at continuous rated current **(SINAMICS DC MASTER)**	kW	8.7	8.2	11.4	**11.4**
Electronics power supply	–	1 AC 230 V, 2 A	1 AC 230 V, 2 A	1 AC 230 V, 2 A	**1 AC 230 V, 2 A**
Fan power supply	–	3 AC 400 V, 50 Hz, **0.95 A** 3 AC 460 V, 60 Hz, 1.25 A	3 AC 400 V, 50 Hz, **0.95 A** 3 AC 460 V, 60 Hz, 1.25 A	3 AC 400 V, 50 Hz, **0.95 A** 3 AC 460 V, 60 Hz, 1.25 A	**3 AC 400 V, 50 Hz, 0.95 A** **3 AC 460 V, 60 Hz, 1.25 A**
Max. current demand of the auxiliary supply 1 AC 50/60 Hz 230 V [2)]	A	2.5	2.5	2.5	**2.5**
Max. current demand of the auxiliary supply 3 AC 50/60 Hz 400 V	A	2	2	2	**2**
Cooling air flow rate	m^3/s	0.67	0.67	0.67	**0.67**
Sound pressure level L_{pA} (1 m)	dB(A)	< 87	< 87	< 87	**< 87**
Measuring surface level L_S(1 m)	dB(A)	17	17	17	**17**
Cable cross-sections line-side, max. connectable per phase	mm^2 (DIN VDE)	6 x 240	6 x 240	6 x 240	**6 x 240**
	AWG/MCM (NEC,CEC)	6 x 500 MCM	6 x 500 MCM	6 x 500 MCM	**6 x 500 MCM**
Cable cross-sections motor-side, max. connectable per phase	mm^2 (DIN VDE)	6 x 240	6 x 240	6 x 240	**6 x 240**
	AWG/MCM (NEC,CEC)	6 x 500 MCM	6 x 500 MCM	6 x 500 MCM	**6 x 500 MCM**
PE connection, max. connection cross-section at enclosure with M12 screw	mm^2 (DIN VDE)	3 x 240	3 x 240	3 x 240	**3 x 240**
	AWG/MCM (NEC,CEC)	3 x 500 MCM	3 x 500 MCM	3 x 500 MCM	**3 x 500 MCM**
Degree of protection	–	IP23	IP23	IP23	**IP23**
Dimension (with doors and panels)					
Width	mm	**620**	**620**	**620**	**620**
Height	mm	**2310**	**2310**	**2310**	**2310**
Depth	mm	**1330**	**1330**	**1330**	**1330**
Weight	kg	900	900	900	**900**

1) Fuseless; on request

2) Data without taking options into account

© Siemens AG 2015

9 Permissible cable lengths

9.1 With and without output reactor or dv/dt filter

The following table shows an update of the specifications of permissible cable lengths with and without output reactor (catalog page 9/14). In addition, the table includes specifications for operation with and without dv/dt filter.

Note

The option L08 (output reactor) is only available for SINAMICS GM150 and SINAMICS SM150 in **IGBT** version.

The option L10 (dv/dt filter) is only available for SINAMICS GM150 and SINAMICS SM150 in **IGCT** version.

Table 3-1 Maximum cable length

	Without output reactor (standard)	With output reactor (option **L08**) [1]
SINAMICS GM150 IGBT version and SINAMICS SM150 IGBT version		
Output voltage 2.3 kV	Up to 2 parallel cables: each 100 m 3 parallel cables: each 80 m 4 parallel cables: each 80 m	Up to 4 cables in parallel: 1000 m
Output voltage 3.3 kV		Up to 4 cables in parallel: 1000 m
Output voltage 4.16 kV		• Up to 2 cables in parallel: 1000 m • 3 to 4 cables in parallel: 350 m (longer lengths on request)
	Mechanically, up to six parallel cables are possible (on request).	
	Without dv/dt filter (standard)	With dv/dt filter (option **L10**) [1]
SINAMICS GM150 IGCT version and SINAMICS SM150 IGCT version		
Output voltage 3.3 kV	Up to 2 parallel cables: each 100 m 3 parall cables: each 80 m 4 parall cables: each 80 m	200m Larger cable lengths on request
	Mechanically, up to six parallel cables are possible (on request).	

1) Distance converter-motor depending on the current load for max. four shielded three-wire cables in parallel (when using single-core cables, refer to catalog page 9/13) – unshielded cables are not permitted

© Siemens AG 2015

Note

The specifications of converter cable lengths are based on the following assumptions:

- Max. ambient temperature: 40 °C
- Max. number of cables in parallel: 4
- Max. cable cross-section: 240 mm²
- Max. output frequency: 150 Hz

For smaller ambient temperatures, output frequencies, currents, cable cross-sections or a smaller number of cables routed in parallel, larger cable length are possible. Plant-specific information can be obtained from your local Siemens sales contact.

9.2 Between line-side transformer and converter

For SINAMICS GM150, the specification in the table " Maximum cable lengths between line-side transformer and converter" on catalog page 9/14 changes as follows.

Table 3-2 Maximum cable lengths between line-side transformer and converter (catalog page 9/14)

Version released 2012			New		
Maximum cable lengths between line-side transformer and converter			Maximum cable lengths between line-side transformer and converter		
Converter	Max. cable lengths		Converter	Max. cable lengths	
	Shielded	Unshielded		Shielded	Unshielded
Output voltage 2.3 kV to 4.16 kV			Output voltage 2.3 kV to 4.16 kV		
SINAMICS GM150	300 m	300 m	SINAMICS GM150	300 m	Not permitted
Output voltage 3.3 kV			Output voltage 3.3 kV		
SINAMICS SM150	80 m	Not permitted	SINAMICS SM150	80 m	Not permitted

© Siemens AG 2015

© Siemens AG 2015

Siemens AG
Industry Sector
Drive Technologies Division
Large Drives
Postfach 47 43
90025 NÜRNBERG
DEUTSCHLAND

Subject to change without prior notice
© Siemens AG 2015

The information provided in this catalog supplement contains descriptions or characteristics of performance which in case of actual use do not always apply as described or which may change as a result of further development of the products. An obligation to provide the respective characteristics shall only exist if expressly agreed in the terms of contract. Availability and technical specifications are subject to change without notice.
All product designations may be trademarks or product names of Siemens AG or supplier companies whose use by third parties for their own purposes could violate the rights of the owners.

www.siemens.com/sinamics

© Siemens AG 2012

SIEMENS

SINAMICS GM150
SINAMICS SM150

Medium-Voltage Converters

SINAMICS Drives

Catalog
D 12

Version
2012

Answers for industry.

© Siemens AG 2012

Related catalogs

SINAMICS Drives D 11
SINAMICS G130 Drive Converter Chassis Units
SINAMICS G150 Drive Converter Cabinet Units

E86060-K5511-A101-A5-7600

SINAMICS S120 D 21.3
Chassis Format Units
and Cabinet Modules
SINAMICS S150
Converter Cabinet Units
E86060-K5521-A131-A3-7600

SINAMICS DCM D 23.1
Converter Units

E86060-K5523-A111-A1-7600

Motion Control Drives D 31
SINAMICS and Motors
for Single-Axis Drives

E86060-K5531-A101-A1-7600

Motion Control PM 21
SIMOTION, SINAMICS S120
and Motors for
Production Machines

E86060-K4921-A101-A2-7600

Three-Phase Induction Motors D 84.1
H-compact
H-compact PLUS

Only PDF
www.siemens.de/drives/infocenter

Products for Automation and Drives CA 01
Interactive catalog, DVD

E86060-D4001-A510-C9-7600

Mall
Information and ordering platform
in the Internet

www.siemens.com/industrymall

CD-ROM for Catalog D 12 · 2012

In the CD-ROM that accompanies Catalog D 12 · 2012, you will find:

- Dimension drawings of the converters (PDF format)
- Dimensional drawings of our converters in PDF format
  www.siemens.com/cadcreator
- Catalog D 84.1 Three-phase Induction Motors H-compact, H-compact PLUS (PDF format)

Hardware and software requirements:

- Intel Pentium 1 GHz or higher
- RAM, min. 512 Mbyte
- Screen resolution 1024 × 768 Pixel
- CD-ROM-drive, at least 16 x
- Windows XP/Vista
- Acrobat Reader 7.0 and higher
- MS Internet Explorer V6.0 (SP2)

Start
Insert the CD-ROM into the CD-ROM drive.
The program starts automatically.
If the AutoRun function is not activated in your system, start file start.hta from the CD-ROM using the Windows Explorer.

Note
Installation is not necessary to view the information on this CD-ROM. This does not apply, however, when using dimensional drawings in DXF format.

© Siemens AG 2012

SINAMICS Drives
SINAMICS GM150
SINAMICS SM150
Medium-Voltage Converters

Catalog D 12 · 2012

The products and systems described in this catalog are manufactured/distributed under application of a certified quality management system in accordance with DIN EN ISO 9001 (Certified Registration No. 002241 QM UM). The certificate is recognized by all IQNet countries.

Supersedes:
Catalog D 12 · 2009

© Siemens AG 2012

Introduction	1
SINAMICS GM150 IGBT version	2
SINAMICS GM150 IGCT version	3
SINAMICS SM150 IGBT version	4
SINAMICS SM150 IGCT version	5
Description of options	6
Accessories	7
Motors for converter operation	8
Engineering information	9
Services and documentation	10
Appendix	11

Printed on paper from sustainably managed forests and controlled sources.

www.pefc.org

PEFC/04-31-0970

© Siemens AG 2012

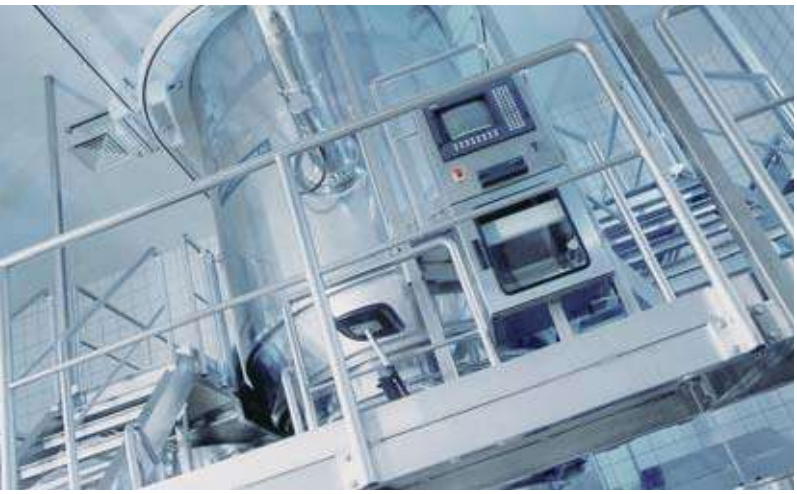

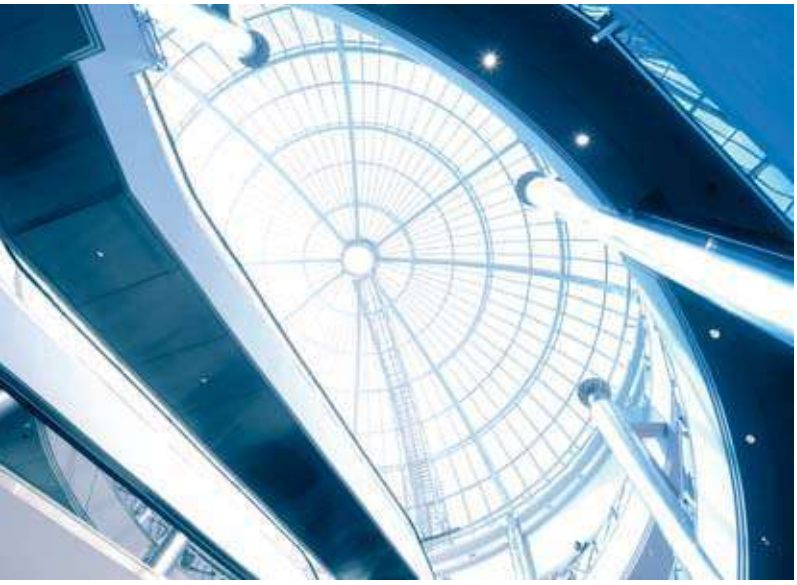

© Siemens AG 2012

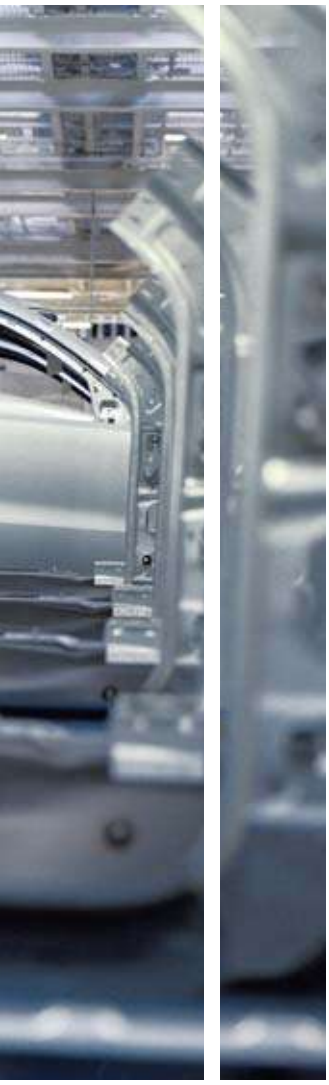

Answers for industry.

Siemens Industry answers the challenges in the manufacturing and the process industry as well as in the building automation business. Our drive and automation solutions based on Totally Integrated Automation (TIA) and Totally Integrated Power (TIP) are employed in all kinds of industry. In the manufacturing and the process industry. In industrial as well as in functional buildings.

Siemens offers automation, drive, and low-voltage switching technology as well as industrial software from standard products up to entire industry solutions. The industry software enables our industry customers to optimize the entire value chain – from product design and development through manufacture and sales up to after-sales service. Our electrical and mechanical components offer integrated technologies for the entire drive train – from couplings to gear units, from motors to control and drive solutions for all engineering industries. Our technology platform TIP offers robust solutions for power distribution.

The high quality of our products sets industry-wide benchmarks. High environmental aims are part of our eco-management, and we implement these aims consistently. Right from product design, possible effects on the environment are examined. Hence many of our products and systems are RoHS compliant (Restriction of Hazardous Substances). As a matter of course, our production sites are certified according to DIN EN ISO 14001, but to us, environmental protection also means most efficient utilization of valuable resources. The best example are our energy-efficient drives with energy savings up to 60 %.

Check out the opportunities our automation and drive solutions provide. And discover how you can sustainably enhance your competitive edge with us.

© Siemens AG 2012

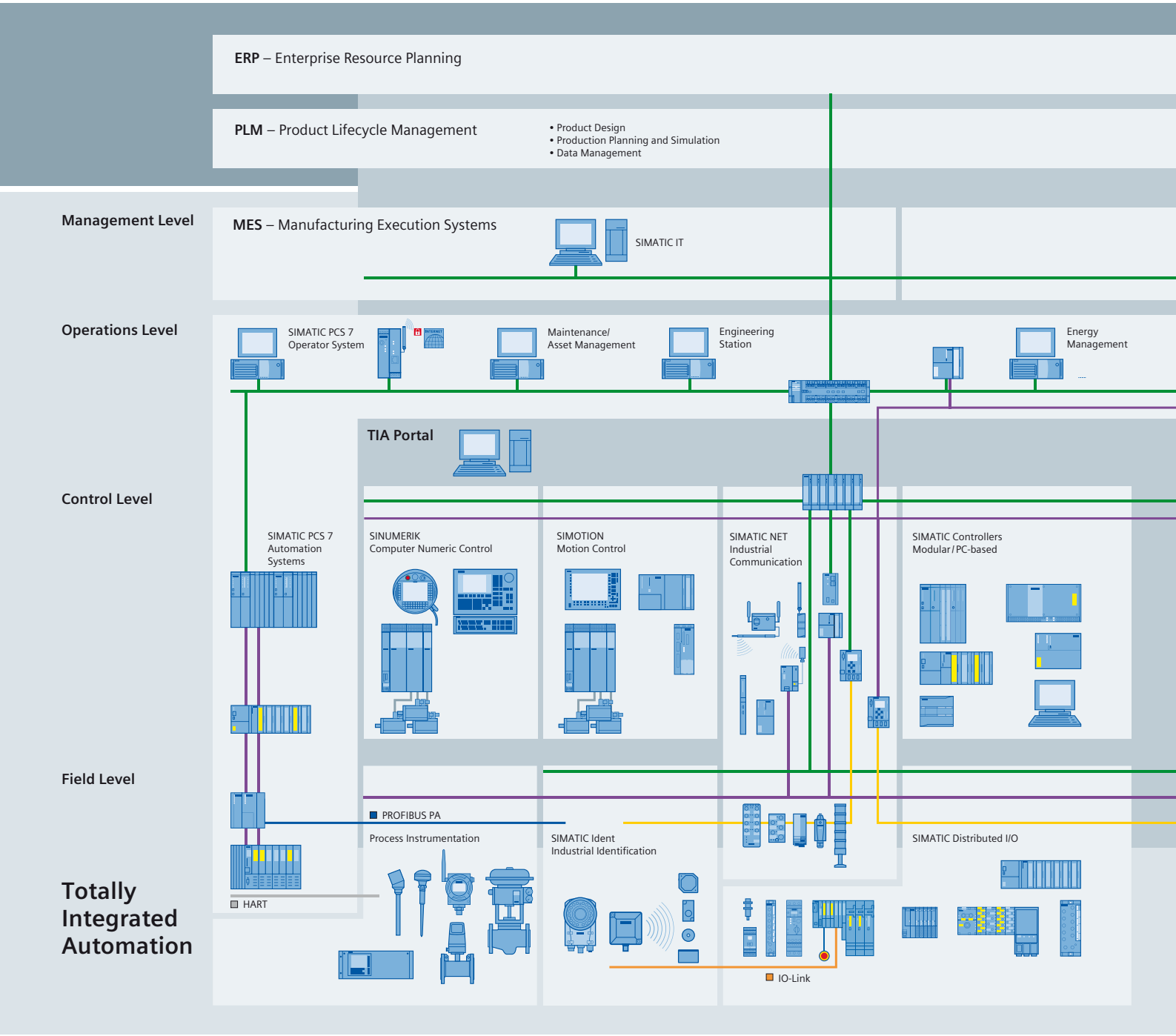

Setting standards in productivity and competitiveness.

Totally Integrated Automation.

© Siemens AG 2012

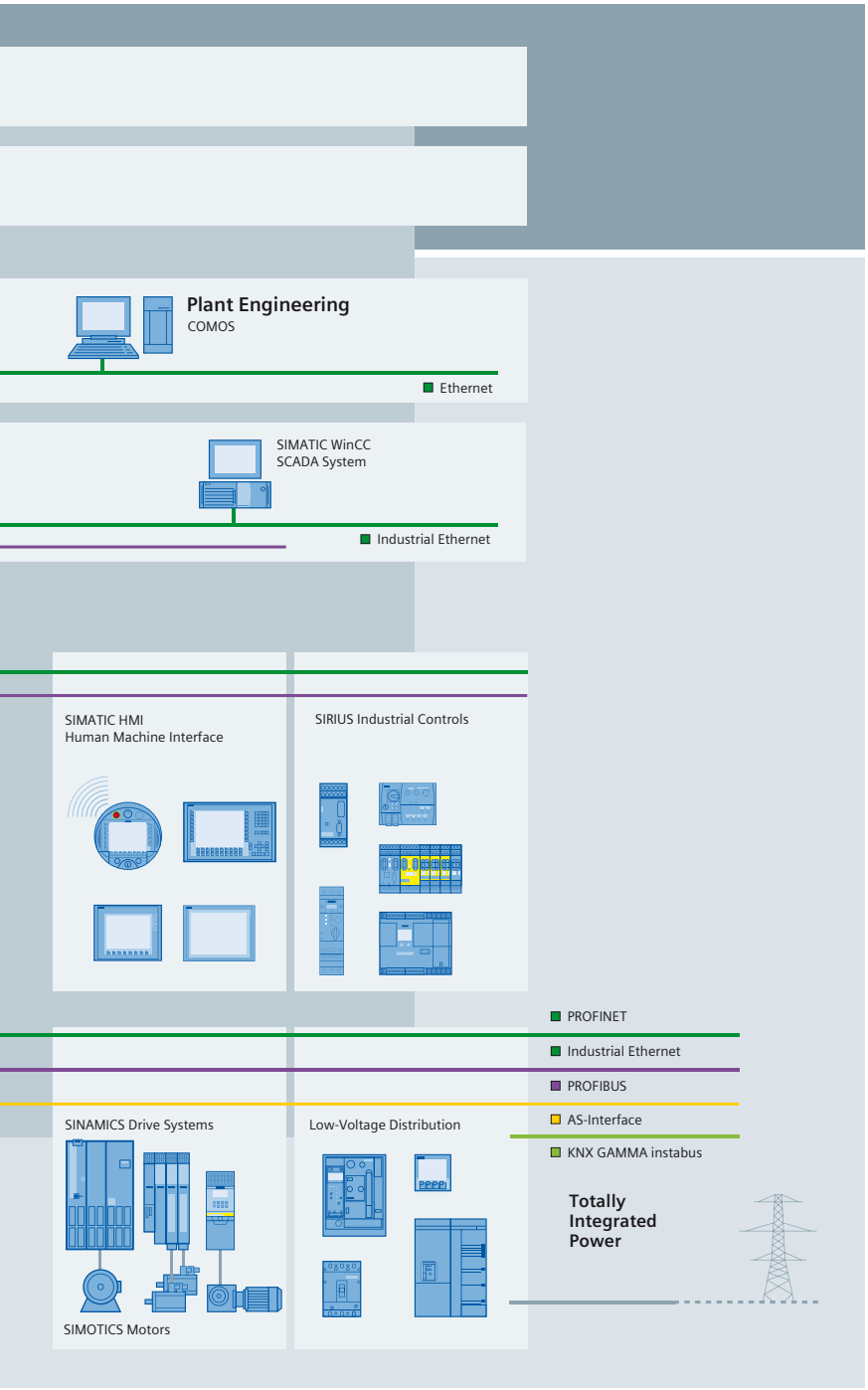

TIA is characterized by its unique continuity.

It provides maximum transparency at all levels with reduced interfacing requirements – covering the field level, production control level, up to the corporate management level. With TIA you also profit throughout the complete life cycle of your plant – starting with the initial planning steps through operation up to modernization, where we offer a high measure of investment security resulting from continuity in the further development of our products and from reducing the number of interfaces to a minimum.

The unique continuity is already a defined characteristic at the development stage of our products and systems.

The result: maximum interoperability – covering the controller, HMI, drives, up to the process control system. This reduces the complexity of the automation solution in your plant. You will experience this, for example, in the engineering phase of the automation solution in the form of reduced time requirements and cost, or during operation using the continuous diagnostics facilities of Totally Integrated Automation for increasing the availability of your plant.

Thanks to Totally Integrated Automation, Siemens provides an integrated basis for the implementation of customized automation solutions – in all industries from inbound to outbound.

© Siemens AG 2012

Integrated power distribution from one source.

Totally Integrated Power.

© Siemens AG 2012

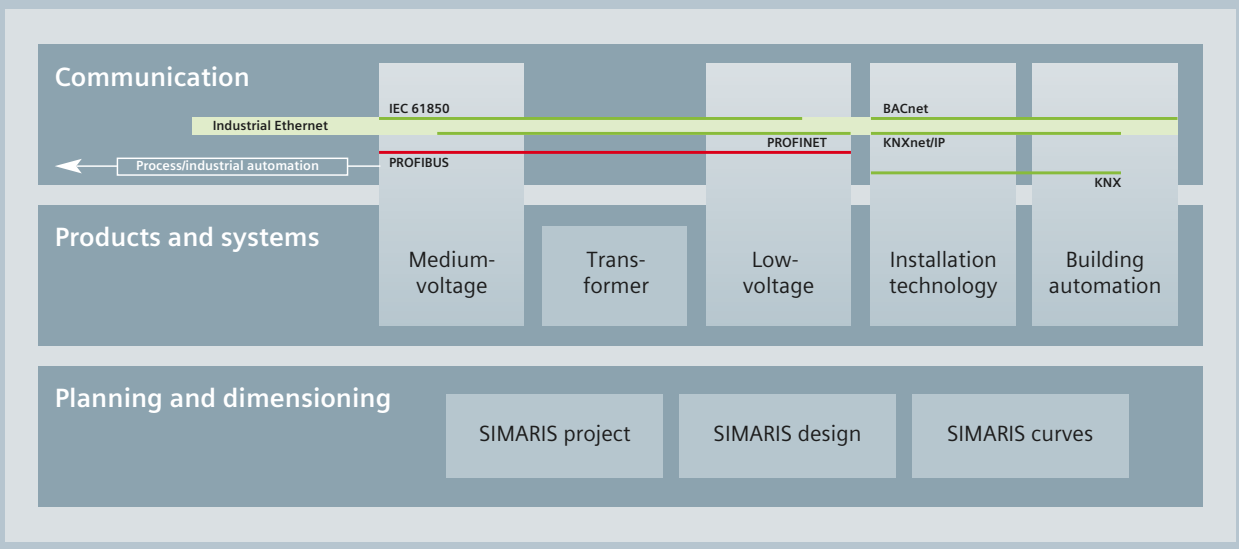

Electrical power distribution requires integrated solutions. Our answer: Totally Integrated Power (TIP). This includes tools and support for planning and configuration and a complete, optimally harmonized product and system portfolio for integrated power distribution from medium-voltage switchgear right to socket outlets.

The power distribution products and systems can be interfaced to building or industrial automation systems (as part of Total Building Solutions or Totally Integrated Automation) via communication capable circuit breakers and modules, allowing the full potential for optimization that an integrated solution offers to be exploited throughout the product cycle – from planning right through to installation and operation.

Thanks to a comprehensive energy management system, power flows can be made transparent and the energy consumption of individual loads can be calculated and allocated. Building operators can thus identify power-intensive loads and implement effective optimization measures. With its products and systems, Totally Integrated Power forms the basis for this functionality and guarantees greater cost-efficiency in industrial applications, infrastructure and buildings.

© Siemens AG 2012

© Siemens AG 2012

Introduction

1/2 The SINAMICS drive family
1/2 Application
1/2 Product variants
1/2 Platform concept and Totally Integrated Automation
1/3 Quality management according to DIN EN ISO 9001
1/4 System properties
1/4 Application areas

1/6 The members of the SINAMICS family
SINAMICS G – The efficient drives
1/6 SINAMICS G110
1/6 SINAMICS G120C
1/6 SINAMICS G120P
1/6 SINAMICS G120
1/7 SINAMICS G110D
1/7 SINAMICS G120D
1/7 SINAMICS G130, SINAMICS G150
SINAMICS S – The flexible drives
1/8 SINAMICS S110
1/8 SINAMICS S120
1/8 SINAMICS S150
SINAMICS medium-voltage converters
1/9 SINAMICS GM150
1/9 SINAMICS SM150
1/9 SINAMICS GL150
1/9 SINAMICS SL150
SINAMICS DCM converter
1/10 SINAMICS DCM

1/11 SINAMICS GM150/SINAMICS SM150 Medium-Voltage Converter
1/11 Overview

© Siemens AG 2012

The SINAMICS drive family

Mixer/mills

Plastics

Converting

Machine tools

Pumps/fans/
compressors

Textiles

Packaging

Conveyor systems

Printing machines

Woodworking

Renewable energies

G_D211_EN_00137a

Application areas of the SINAMICS drive family

Application

SINAMICS is the family of drives from Siemens designed for industrial machine and plant construction. SINAMICS offers solutions for all drive tasks:

- Simple pump and fan applications in the process industry
- Complex single-motor drives in centrifuges, presses, extruders, elevators, as well as conveyor and transport systems
- Drive line-ups in textile, plastic film, and paper machines, as well as in rolling mill plants
- High-precision servo drives for the manufacture of wind turbines
- Highly dynamic servo drives for machine tools, as well as packaging and printing machines

Product variants

Depending on the application, the SINAMICS range offers the ideal variant for any drive task.

- SINAMICS G is designed for standard applications with induction motors. These applications have less stringent requirements regarding the dynamic performance of the motor speed.
- SINAMICS S handles demanding drive tasks with synchronous and induction motors and fulfills stringent requirements regarding
  - the dynamic performance and accuracy
  - integration of extensive technological functions in the drive control system.
- SINAMICS DCM is the DC drive belonging to the SINAMICS family. As a result of its expandability across the board, it addresses both basic as well as demanding applications in drive technology and in complementary markets.

Platform concept and Totally Integrated Automation

All SINAMICS versions are based on a platform concept. Common hardware and software components, as well as standardized tools for design, configuration and commissioning tasks, ensure high-level integration across all components. SINAMICS handles a wide variety of drive tasks without system gaps. The different SINAMICS versions can be easily combined with each other.

SINAMICS is part of the Siemens "Totally Integrated Automation" concept. Integrated SINAMICS systems covering engineering, data management and communication at the automation level, result in extremely cost-effective solutions based on SIMOTION, SINUMERIK and SIMATIC control systems.

© Siemens AG 2012

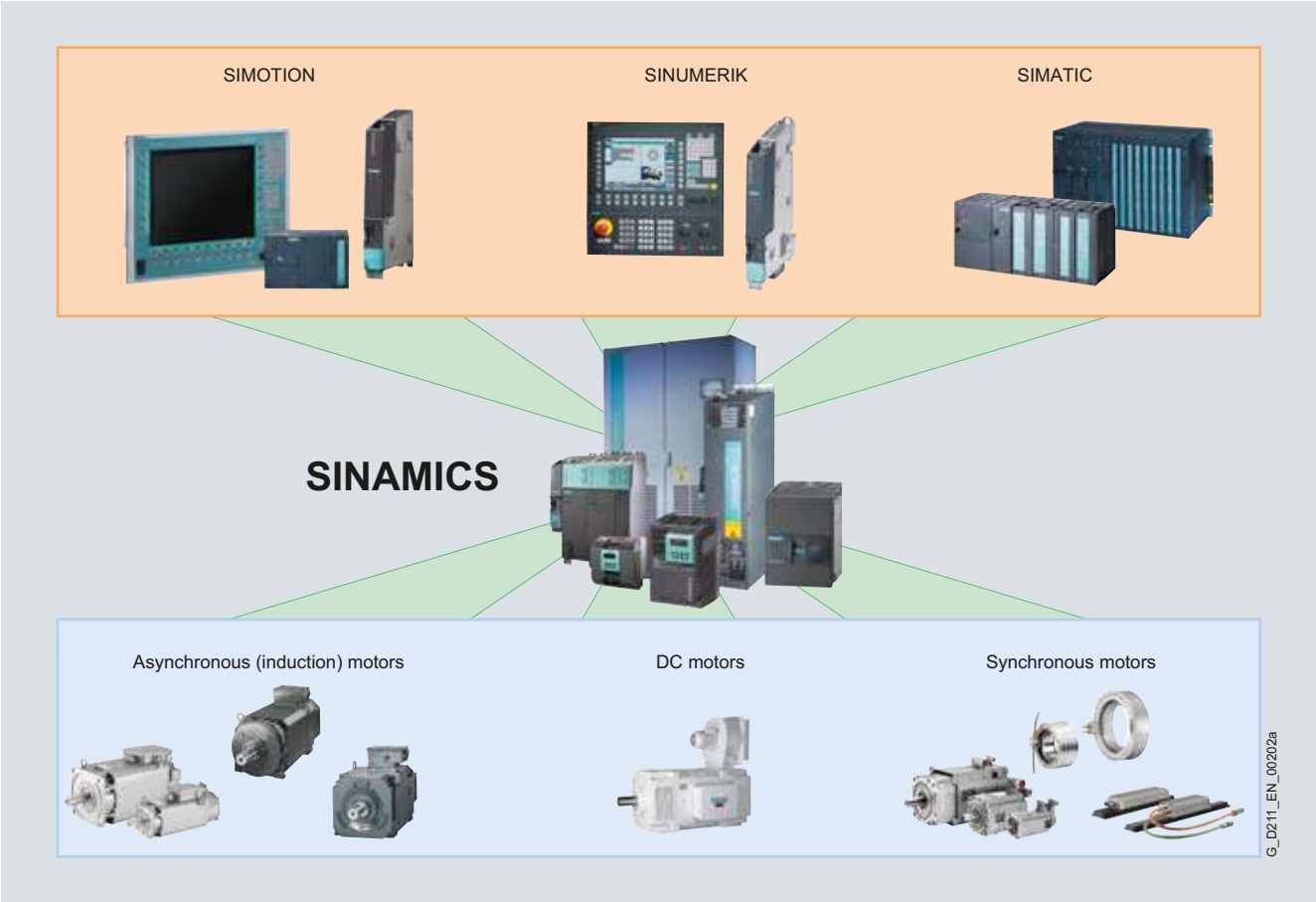

SINAMICS as part of the Siemens modular automation system

Quality management according to DIN EN ISO 9001

SINAMICS is able to meet the highest quality requirements. Comprehensive quality assurance measures in all development and production processes ensure a consistently high level of quality.

Of course, our quality management system is certified by an independent authority in accordance with EN ISO 9001.

© Siemens AG 2012

The SINAMICS drive family

Low-Voltage AC Converters							
For basic applications		For high-quality applications					For basic servo drives
SINAMICS G110	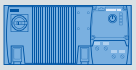 SINAMICS G110D	SINAMICS G120P	SINAMICS G120	SINAMICS G120D	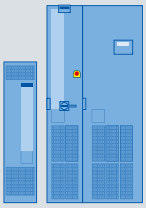 SINAMICS G130/G150		SINAMICS S110
V/f Control	*V/f* Control/FCC	*V/f* Control / Vector Control					Servo Control
0.12 ... 3 kW	0.75 ... 7.5 kW	0.37 ... 90 kW	0.37 ... 250 kW	0.75 ... 7.5 kW	75 ... 2700 kW		0.12 ... 90 kW
Pumps, fans, conveyor belts	Conveyor technology	Pumps, fans, conveyor belts, compressors, mixers, mills, extruders					Single-axis positioning applications for machine and plant engineering

Common Engineering Tools

SIZER for Siemens Drives – for simple planning and configuration **STARTER – for fast commissioning, optimization and diagnostics**

System properties

The SINAMICS range is characterized by the following system properties:

- Standard functionality based on a single platform concept
- Standardized engineering
- High degree of flexibility and combination capability
- Broad power range
- Designed for global use
- SINAMICS Safety Integrated
- Higher efficiency and effectiveness
- High energy efficiency
- Versatile interfacing facilities to higher-level controllers
- Totally Integrated Automation

Application areas

Tailored to suit different application areas, the SINAMICS range encompasses the following products:

AC low-voltage converters (line supply < 1000 V)

- **SINAMICS G110**
  - The versatile drive for low power ratings
- **SINAMICS G120P**
  - The specialist for pumps, fans, and compressors
- **SINAMICS G120**
  - The modular single-motor drive for low up to medium power ratings
- **SINAMICS G110D**
  - The distributed, compact single-motor drive in a high degree of protection for basic applications
- **SINAMICS G120D**
  - The distributed, modular single-motor drive in a high degree of protection for sophisticated applications
- **SINAMICS G130** and **SINAMICS G150**
  - The universal drive solution for single-motor drives with a high power rating
- **SINAMICS S110**
  - The basic positioning drive for single-axis applications
- **SINAMICS S120**
  - The flexible, modular drive system for demanding drive tasks
- **SINAMICS S150**
  - The drive solution for demanding single-motor drives with a high power rating

© Siemens AG 2012

Low-Voltage AC Converters		DC Converters	Medium-Voltage AC Converters
For demanding applications		For basic and demanding applications	For high-power applications
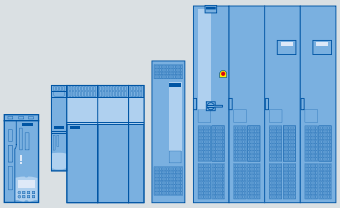 SINAMICS S120	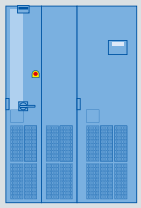 SINAMICS S150	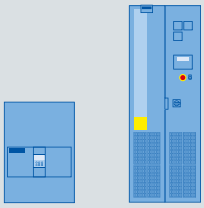 SINAMICS DCM	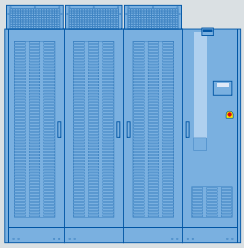 SINAMICS GM150/SM150/GL150/SL150
V/f Control / Vector Control / Servo Control		Closed-loop speed control / torque control	*V/f* Control / Vector Control
0.12 ... 4500 kW	75 ... 1200 kW	6 kW ... 30 MW	1 ... 120 MW
Motion Control applications in production machines (packaging, textile, printing, paper, plastic), machine tools, plants and process lines, metal forming technology, renewable energies	Test stands, cross cutters, centrifuges	Rolling mills, cross cutters and shears, wire-drawing machines, extruders and kneaders, presses, elevator and crane installations, cableways and lifts, mining hoists, test stand drives	Pumps, fans, compressors, mixers, extruders, mills, rolling mills, mining hoist drives, excavators, test stands and marine drives

G_D023_EN_00068f

Common Engineering Tools

SIZER for Siemens Drives – for simple planning and configuration **STARTER – for fast commissioning, optimization and diagnostics**

Application areas *(continued)*

DC converter (line supply voltage < 1000 V)

- **SINAMICS DCM**
  - The scalable drive system for basic and demanding applications

AC medium-voltage converters (line supply voltage > 1000 V)

- **SINAMICS GM150**
  - The universal drive solution for single-motor drives
- **SINAMICS SM150**
  - The drive solution for demanding single-motor and multimotor drives
- **SINAMICS GL150**
  - The drive solution for synchronous motors up to 120 MW
- **SINAMICS SL150**
  - The drive solution for slow speed motors with the highest torques and overloads

© Siemens AG 2012

The members of the SINAMICS family

Overview

SINAMICS G – The efficient drives			
SINAMICS G110	**SINAMICS G120C**	**SINAMICS G120P**	**SINAMICS G120**
The versatile single drive for low power ratings	*The compact drive with high power density*	*The specialist for pumps, fans, and compressors*	*The modular single drive for low to medium power ratings*
Main applications			
Machines and plants in industrial and commercial applications	For machine manufacturers and distributors in industrial and commercial applications (secondary drive in production machines or generally for water/waste water, automotive)	Machines and plants in industrial and commercial applications (heating, air conditioning, ventilation, water/waste water, process industry, food and beverage industry)	Machines and plants in industrial and commercial applications (machinery construction, automotive, textiles, chemical industry, printing, steel)
Application examples			
• Simple pumps and fans • Auxiliary drives • Conveyor systems • Billboards • Door/gate operating mechanisms	• Mixers • Extruders • Simple pumps, fans, compressors • Vibrator motors • Simple wire drawing machines	• Pumps and fans • Compressors	• Pumps and fans • Compressors • Centrifuges • Conveyor systems
Highlights			
• Compact • Can be flexibly adapted to different applications • Simple and fast commissioning • Clear terminal layout • Optimum interaction with SIMATIC and LOGO!	• Compact • High power density • Simple and fast commissioning • USB port • Plug-in terminal strips • Standard commissioning with SD card • Optimum interaction with SIMOTION and SIMATIC	• High degree of protection IP54 • Integrated pumping, ventilation, compressing functions • Reduced line harmonic distortions • Optimum energy management through innovative technology • Easy-to-use application wizards • Flexible and modular	• Modular • Can be flexibly expanded • Simple and fast commissioning • Regenerative feedback • Innovative cooling concept • Optimum interaction with SIMOTION and SIMATIC
Catalog			
D 31	D 31	D 31	D 31

© Siemens AG 2012

Overview

SINAMICS G – The efficient drives		
SINAMICS G110D	**SINAMICS G120D**	**SINAMICS G130, SINAMICS G150**
The distributed single drive for basic solutions	*The distributed single drive for high-performance solutions*	*The universal drive solution for single drives with high output ratings*
Main applications		
Horizontal conveyor applications in industrial environments, main focus on distribution and logistics in airports; generally suitable for basic conveyor-related tasks with local control or connected to a bus via AS- Interface	Conveyor drive applications in industrial environments, main focus on the automotive industry; also suitable for high-performance applications e.g. at airports and in the food, beverage and tobacco industry (without surfactants)	Machines and plants in the process and production industry, water/waste, power stations, oil and gas, petrochemicals, chemical raw materials, paper, cement, stone, steel
Application examples		
• Conveyor systems • Airports • Distribution logistics	• Conveyor systems • Electric monorail system in distribution logistics	• Pumps and fans • Compressors • Extruders and mixers • Mills
Highlights		
• Low profile design with standard drilling dimensions (standard footprint) in IP65 degree of protection • Simple and fast commissioning • Versions with and without a maintenance switch • Optional key-operated switch • AS-Interface with bus parameterization • Quick stop function • Integrated brake control, 180 V DC • Optimum interaction with SIMATIC and LOGO!	• Low profile design with standard drilling dimensions (standard footprint) in IP65 degree of protection • Modular • Can be flexibly expanded • Simple and fast commissioning • Regenerative feedback • Optimum interaction with SIMOTION and SIMATIC	• Space-saving • Low noise • Simple and fast commissioning • SINAMICS G130: Modular components • SINAMICS G150: Ready-to-connect cabinet unit • Optimum interaction with SIMATIC
Catalog		
D 31	D 31	D 11

© Siemens AG 2012

The members of the SINAMICS family

Overview

SINAMICS S – The flexible drives		
SINAMICS S110	**SINAMICS S120**	**SINAMICS S150**
The specialist for simple positioning tasks	*The flexible, modular drive system for demanding drive tasks*	*The drive solution for sophisticated single drives with high output ratings*
Main applications		
Machines and plants in industrial applications, where machine axes should be quickly and precisely positioned in the simplest possible way.	Machines and plants in industrial applications (packaging, plastics, textile, printing, wood, glass, ceramics, presses, paper, lifting equipment, semiconductors, automated assembly and testing equipment, handling, machine tools)	Machines and plants in the process and production industry, food, beverages and tobacco, automotive and steel industry, mining/open-cast mining, shipbuilding, lifting equipment, conveyors
Application examples		
• Handling equipment • Feed and withdrawal devices • Stacking units • Automatic assembly machines • Laboratory automation • Metalworking • Woodworking, glass and ceramic industries • Plastics processing machines • Tracking systems for solar technology	• Motion control applications (positioning, synchronous operation) • Numerical control, interpolating motion control • Converting • Technological applications	• Test stand drives • Centrifuges • Elevators and cranes • Cross cutters and shears • Conveyor belts • Presses • Cable winches
Highlights		
• For universal use • Flexible and modular • Scalable in terms of power rating, functionality • Simple and fast commissioning, auto-configuration • Wide range of motors • Optimum interaction with SIMATIC	• For universal use • Flexible and modular • Scalable in terms of power rating, functionality, number of axes, performance • Simple and fast commissioning, auto-configuration • Wide range of motors • Optimum interaction with SIMOTION, SINUMERIK and SIMATIC	• Four-quadrant operation as standard • High control accuracy and dynamic response • Minimum harmonic effects on the supply system, considerably lower than the limits specified in IEEE 519 THD • Tolerant to line voltage fluctuations • Simple and fast commissioning • Ready-to-connect cabinet unit • Optimum interaction with SIMATIC
Catalog		
D 31	PM 21, D 21.3, D 31 and NC 62	D 21.3

© Siemens AG 2012

Overview

SINAMICS medium-voltage converters			
SINAMICS GM150	**SINAMICS SM150**	**SINAMICS GL150**	**SINAMICS SL150**
The drive solution for single-motor and multi-motor drives in the medium-voltage range	***The drive solution for demanding single-motor and multi-motor drives***	***The drive solution for synchronous motors up to 120 MW***	***The drive solution for slow speed motors with highest torques and overloads***
Main applications			
Machines and plants in the process industry	Plants and machines in the steel, mining and engineering sector	Plants and machines in the process industry, especially in the oil, gas and petrochemicals sectors	Plants and machines in the basic materials industry, especially in the steel and mining sectors
Application examples			
• Pumps and fans • Compressors • Extruders and mixers • Mills • Marine drives	• Hot and cold rolling mill stands • Mine hoists • Test stand drives • Ore conveyor belts	• Compressors • Pumps and fans • Extruders and kneaders • Marine drives • Blast furnace blowers	• Hot rolling mill roughing stands • Mine hoists • Ore and cement mills • Excavators
Highlights			
• Space-saving • Simple and fast commissioning • Ready-to-connect cabinet units • Optimum interaction with SIMATIC • Liquid- and air-cooled version	• Four-quadrant operation as standard • High efficiency and minimum load on the motor • High control accuracy and dynamic performance • Almost free of line-current harmonics • Option of reactive power compensation • Simple and fast commissioning • Ready-to-connect cabinet unit • Optimum interaction with SIMATIC • Liquid-and air-cooled version	• Compact design and high power density • Easy operation and monitoring • Extremely rugged, reliable and almost maintenance-free • Two directions of rotation by reversing the rotating field • Capable of seamless integration into higher-level automation systems • Liquid- and air-cooled version	• Low output frequency/ motor speed • High short-time overload capability • Four-quadrant operation as standard • Extremely rugged, reliable and almost maintenance-free • High efficiency • Capable of seamless integration into higher-level automation systems • Liquid- and air-cooled version
Catalog			
D 12	D 12	–	–

© Siemens AG 2012

Overview

SINAMICS DCM converters

SINAMICS DCM

The scalable drive system for basic and demanding applications

Main applications

Machines and plants in the industrial environment (steel/aluminum, plastics, printing, paper, cranes, mining/open-cast mining, oil and gas, excitation equipment) in the new plant and retrofit businesses

Application examples

- Rolling mills
- Cross cutters and shears
- Wire-drawing machines
- Extruders and kneaders
- Presses
- Elevators and cranes
- Cableways and lifts
- Mine hoists
- Test stand drives

Highlights

- PROFIBUS as standard, PROFINET optional
- Variance of the Control Units
- 24 V DC electronics power supply
- Power unit isolated with respect to ground
- Free function blocks and Drive Control Chart
- Expandable functionality using SINAMICS components
- Single-phase connection possible
- Coated modules and nickel-plated copper busbars
- Wide temperature range

Catalog

D 23.1

© Siemens AG 2012

Overview

The SINAMICS GM150 and SINAMICS SM150 converters are the expansion of the SINAMICS drive family in the medium voltage range. They are supplied as ready-to-connect cabinet units.

SINAMICS GM150

SINAMICS GM150 converters are designed as an individual drive for applications with quadratic and constant load characteristics without regenerative feedback.

Typical applications:

- Pumps and fans
- Compressors
- Extruders and mixers
- Mills
- Marine drives

The inverters on the motor side (Motor Modules) have IGBT power semiconductors in the lower power range to 13 MVA and IGCT power semiconductors in the upper power range from 10 MVA to 21 MVA.

SINAMICS SM150

SINAMICS SM150 converters are designed for demanding single and multi-motor applications and meet the following requirements:

- High dynamic response
- Operation at low frequency
- Line power factor = 1.0 (can be freely selected)
- Four-quadrant operation

Typical applications:

- Roller drives (cold, hot)
- Hoisting drives
- Test stands
- Belt systems

Both the line-side infeed/regenerative feedback units (Active Line Modules) and the motor-side inverters are either equipped with IGBT or IGCT power semiconductors.

	SINAMICS GM150 IGBT		SINAMICS GM150 IGCT		SINAMICS SM150 IGBT	SINAMICS SM150 IGCT
Line Module (rectifier on mains side)						
Basic Line Module, 12-pulse (two-quadrant operation)	Standard		Standard		–	–
Basic Line Module, 24-pulse (two-quadrant operation)	Option Standard for a parallel circuit configuration		Option Standard for a parallel circuit configuration		–	–
Basic Line Module, 36-pulse (two-quadrant operation)	–		Standard for a triple parallel circuit configuration		–	–
Active Line Module (four-quadrant operation)	–		–		Standard	Standard
Motor Module (rectifier on motor side)						
Voltage range	2.3 ... 4.16 kV		3.3 kV		3.3 and 4.16 kV	3.3 kV
Power range (typ.)	1 ... 13 MVA		10 ... 21 MVA		3.4 ... 7.2 MVA	5 ... 31.5 MVA
Cooling method						
• Air cooling	Standard		–		Standard	–
• Water cooling	Standard		Standard		Standard	Standard
Control modes	Encoderless	With encoder	Encoderless	With encoder	Standard: With encoder	Standard: With encoder
• Induction motor	Standard	Standard	Standard	Standard	Standard	Standard
• Synchronous motor, separately excited with slipring excitation	On request	Option	On request	Option	Option	Option
• Synchronous motor, separately excited with brushless reverse field excitation	On request	On request	On request	On request	On request	On request
• Synchronous motor, permanently excited	On request	On request	On request	Option	On request	Option
Sine-wave filter	Option		–		On request	–
DC bus configuration with several Motor Modules on one common DC bus	–		–		–	Standard

Benefits

- Low-cost: all the way from planning to service
- Simple and uncomplicated in every regard: engineering, integration, operation and diagnostics
- High availability: robust and reliable components, easy installation, high service-friendliness

© Siemens AG 2012

Notes

© Siemens AG 2012

SINAMICS GM150 in IGBT version

2

2/2	**Overview**
2/2	**Benefits**
2/3	**Design**
2/6	**Function**
	Selection and ordering data
2/8	Air cooling, without sine-wave filter
2/8	Air cooling, with sine-wave filter
2/9	Water cooling, without sine-wave filter
2/9	Water cooling, with sine-wave filter
2/10	**Options**
	Technical specifications
2/18	General technical data
2/18	Rated data
2/19	Control properties
2/19	Climatic ambient conditions
2/20	Derating for special installation conditions
	Type-related technical data
2/22	Air cooling, without sine-wave filter
2/30	Air cooling, with sine-wave filter
2/36	Water cooling, without sine-wave filter
2/44	Water cooling, with sine-wave filter

© Siemens AG 2012

SINAMICS GM150 in IGBT version

Overview

SINAMICS GM150 as IGBT version (air-cooled)

SINAMICS GM150 converters as IGBT version can be optimally combined with Siemens converter motors. Sine-wave filters are not required in this case. This ensures that the drive solution is particularly cost-effective, compact and efficient.

With the sine-wave filter available as an optional extra, the converters offer the best conditions on the market for the operation of line motors. This makes them ideally suited for the retrofitting of existing systems from fixed-speed drives to speed-controlled drives.

SINAMICS GM150 converters as IGBT version offer economic drive solutions that can be matched to customers' specific requirements by adding from the wide range of available components and options.

IGBT converters are available for the following voltages and outputs:

Rated output voltage	Type rating with air cooling	Type rating with water cooling
2.3 kV	1.0 ... 3.2 MVA	2.0 ... 4.0 MVA
3.3 kV	1.0 ... 8.0 MVA	2.0 ... 10.3 MVA
4.16 kV	1.3 ... 10.1 MVA	2.0 ... 13.0 MVA

Global use

SINAMICS GM150 converters as IGBT version are manufactured to international standards and regulations, making them ideally suited for global use. These converters are also available in a UL-listed version and in a ship-going form (meeting the requirements of all major classification organizations).

Benefits

- Compact design and high flexibility in configuration ensures easy plant integration
- Easy operation and monitoring on the convenient operator panel
- Easy and reliable operation through integrated maintenance functions: the converter signals early and automatically if maintenance is required or components need to be exchanged
- High robustness and reliability due to the use of HV-IGBT technology and fuseless installation combined with intelligent reaction to external disturbances
- Can be easily integrated into automation solutions due to PROFIBUS interface supplied as standard and various analog and digital interfaces
- High level of service-friendliness through innovative power section design with plug-in power cards and easy access to all components

© Siemens AG 2012

Design

SINAMICS GM150 converters in the IGBT version are available with a 12-pulse or 24-pulse Basic Line Module.

The 12-pulse version is standard for smaller output ratings with voltages of 2.3 kV, 3.3 kV and 4.16 kV.

For higher output power ratings, two Basic Line Modules with a common DC link or two Line Modules (24-pulse Basic Line Modules) are connected in parallel.

The 24-pulse Basic Line Module is optionally available for smaller output ratings with voltages of 2.3 kV, 3.3 kV and 4.16 kV.

HV-IGBT power semiconductors are used in the Motor Modules – they are mounted on plug-in Power cards that are simple to replace.

Both line and motor connections can be optionally realized from underneath or above.

The converter cabinet unit consists of a section for the Basic Line Module, a section for the Motor Module and the control section.

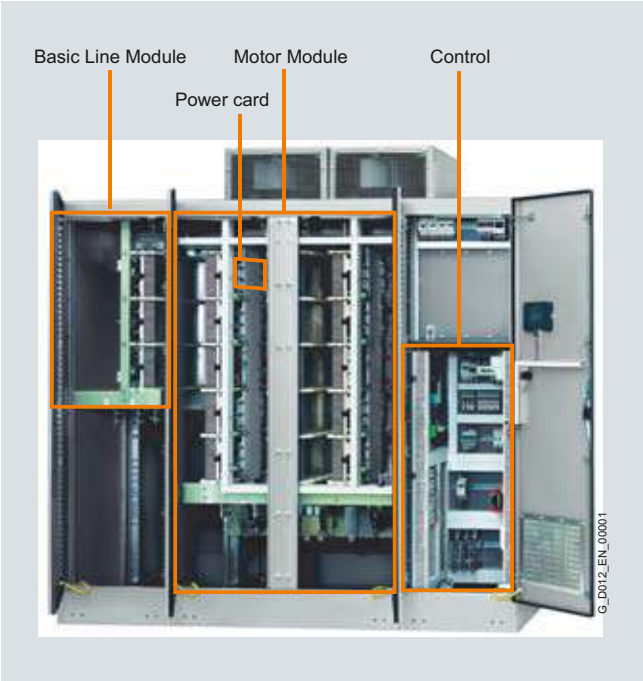

SINAMICS GM150 as air-cooled IGBT version, internal design

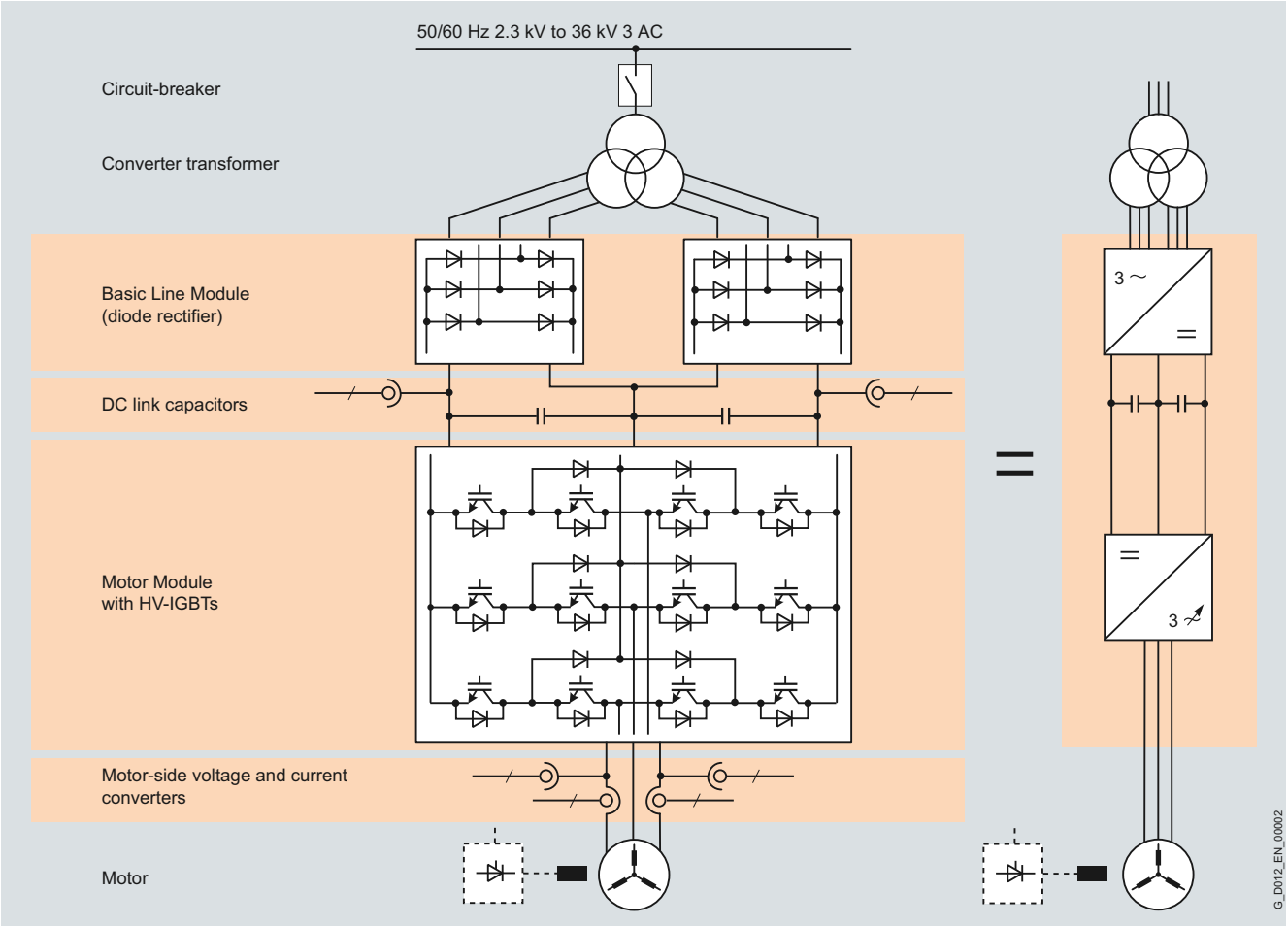

Block diagram

© Siemens AG 2012

Design

The following wiring versions are available for SINAMICS GM150 as IGBT version.

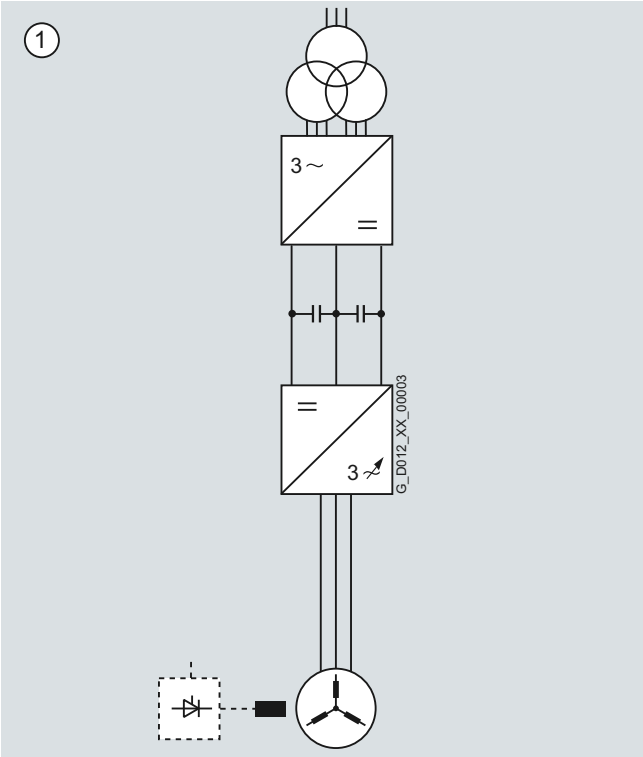

Basic circuit, 12-pulse infeed, diode rectifier in the Basic Line Module connected in series

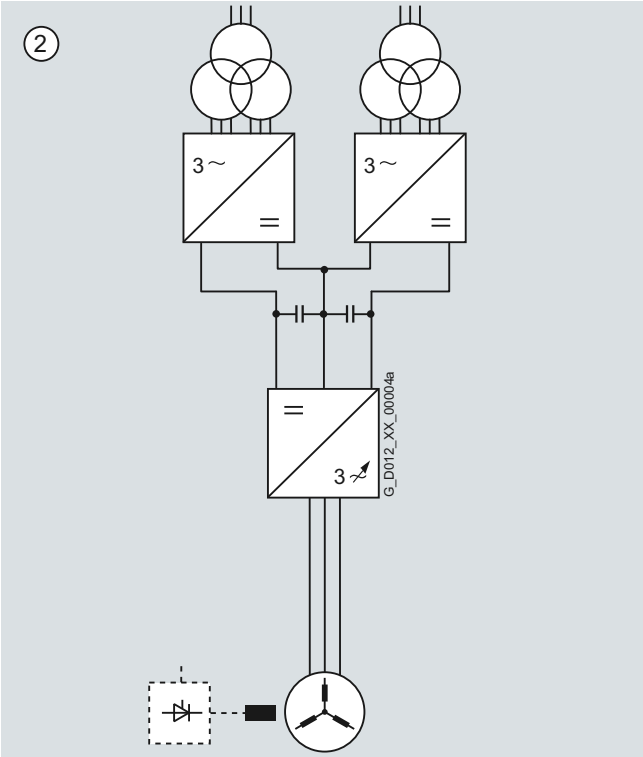

24-pulse infeed by connecting two Basic Line Modules in parallel (option **N15**), diode rectifier connected in parallel in the Basic Line Module

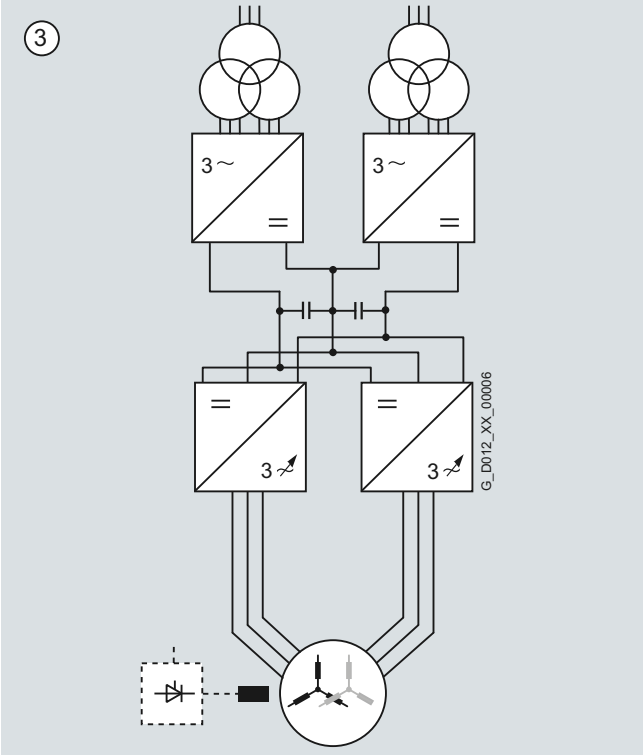

Increased power rating by connecting Basic Line Modules and Motor Modules in parallel on a common DC bus for 3.3 kV and 4.16 kV (24-pulse infeed as standard), diode rectifier connected in parallel in the Basic Line Module

© Siemens AG 2012

Design

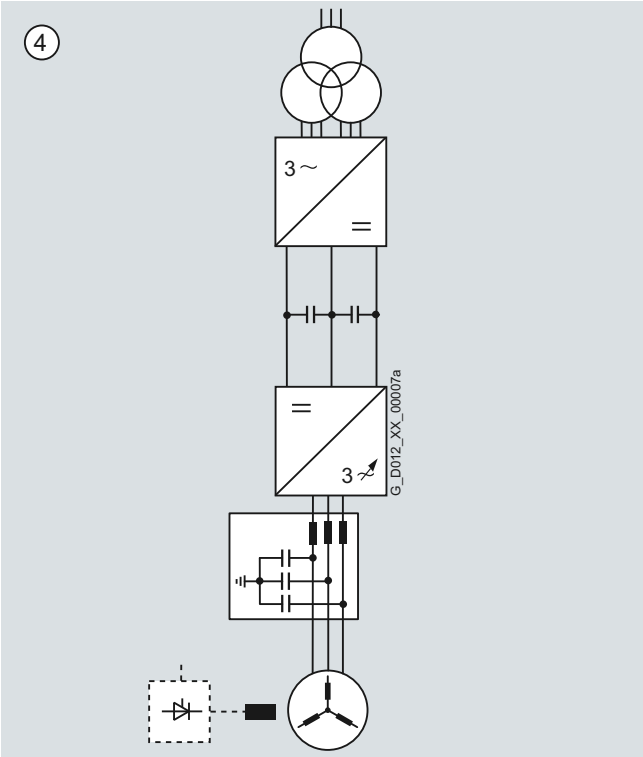

Basic circuit with sine-wave filter for operating line motors (option **Y15**), diode rectifier connected in series in the Basic Line Module

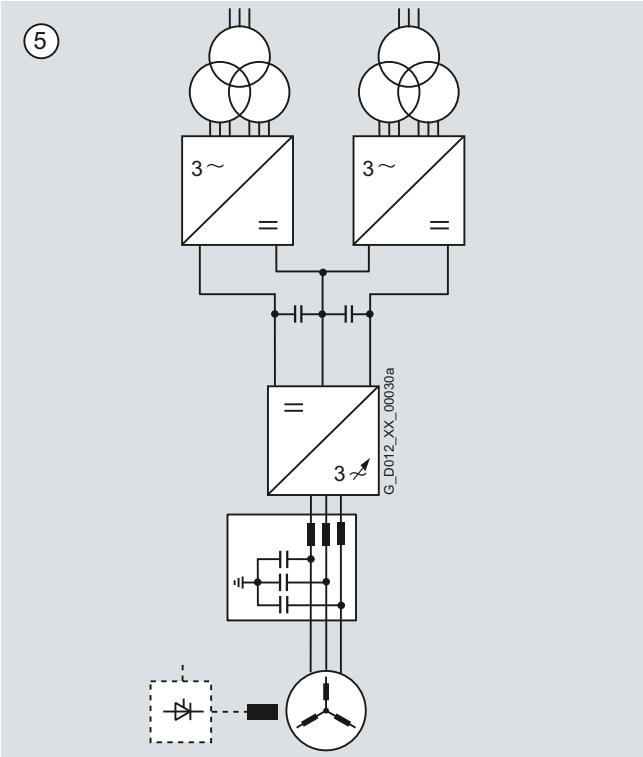

24-pulse infeed by connecting two Basic Line Modules in parallel (option **N15**), diode rectifier connected in parallel in the Basic Line Module here, with sine-wave filter for operating line motors (option **Y15**)

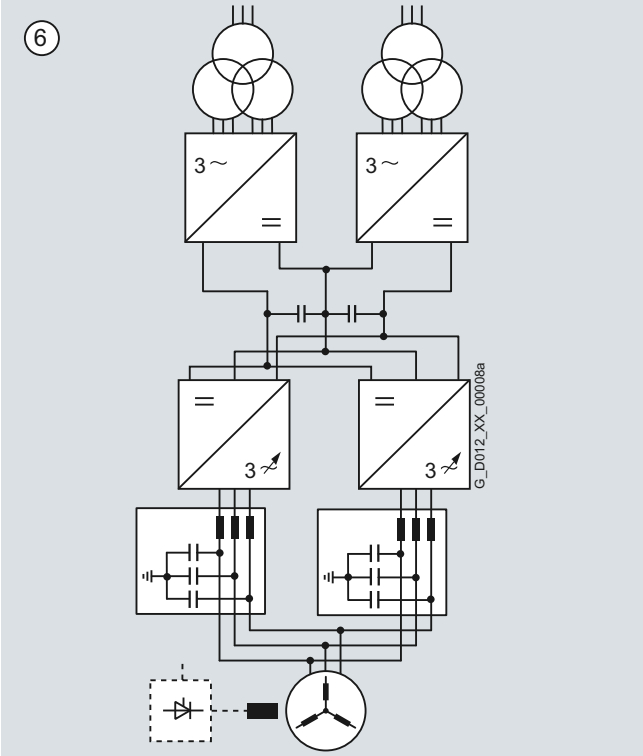

Parallel circuit with sine-wave filter for operating line motors for 3.3 kV and 4.16 kV (option **Y15**), diode rectifier connected in parallel in the Basic Line Module

Note: The motor cables are combined in the motor terminal box.

© Siemens AG 2012

Function

Characteristic features

SINAMICS GM150 in IGBT version		
Line Module (rectifier on mains side)		
Basic Line Module, 12-pulse (two-quadrant operation)	Standard	
Basic Line Module, 24-pulse (two-quadrant operation)	Option Standard for a parallel circuit configuration	
Motor Module (rectifier on motor side)		
Voltage range	2.3 ... 4.16 kV	
Power range (typ.)	1 ... 13 MVA	
Cooling method		
• Air cooling	Standard	
• Water cooling	Standard	
Control modes	Without encoder	With encoder
• Induction motor	Standard	Standard
• Synchronous motor, separately excited, with slip-ring excitation	On request	Option
• Synchronous motor, separately excited, with brushless (RG) excitation system	On request	On request
• Synchronous motor, separately excited	Option	On request
Sine-wave filter	Option	

Software and protection functions

SINAMICS GM150 in IGBT version	Description
Closed-loop control	The motor-side closed-loop control is realized as a field-oriented closed-loop vector control that can be operated as a speed or torque control as required. The closed-loop vector control achieves the dynamic performance of a DC drive. This is made possible by the fact that the current components forming the torque and flux can be controlled precisely independently of each other. Prescribed torques can thus be observed and limited accurately. In the speed range from 1:10, the field-oriented closed-loop control does not require an actual speed value encoder. An actual speed value encoder is required in the following scenarios: • High dynamics requirements • Torque control/constant torque drives with a control range > 1:10 • Very low speeds • Very high speed accuracy
Setpoint input	The setpoint can be defined internally or externally; internally as a fixed setpoint, motorized potentiometer setpoint or jog setpoint, externally via the PROFIBUS interface or an analog input of the customer's terminal strip. The internal fixed setpoint and the motorized potentiometer setpoint can be switched over or adjusted using control commands via all of the interfaces.
Ramp-function generator	A user-friendly ramp-function generator with separately adjustable ramp-up and ramp-down times, together with variable smoothing times in the lower and upper speed ranges, improves the control response and therefore prevents mechanical overloading of the drive train. The ramp-down ramps can be parameterized separately for emergency stop.
$V_{dc\ max}$ controller	The $V_{dc\ max}$ controller automatically prevents overvoltages in the DC link if the down ramp is too short, for example. This can also extend the set ramp-down time.
Kinetic buffering (KIP)	Power supply failures are bridged to the extent permitted by the kinetic energy of the drive train. The speed drops depending on the moment of inertia and the load torque. The current speed setpoint is resumed when the power supply returns. This function can cause fast load cycles changes which may have a negative effect on the infeed line (in particular on weak lines e.g. on ships).
Automatic restart (option L32)	The automatic restart switches the drive on again when the power is restored after a power failure or a general fault, and ramps up to the current speed setpoint.
Flying restart	The flying restart function permits smooth connection of the converter to a rotating motor.
Diagnostics functions	• Self-diagnosis of control hardware • Non-volatile memory for reliable diagnosis when the power supply fails • Monitoring of HV IGBTs with individual messages for each slot • User-friendly on-site operator panel with plain text messages
Operating hours and switching cycle counter	The operating hours of the non-redundant fans, which are located on the roof section of the cabinets, are detected and logged so that preventive maintenance can be performed or equipment replaced as a preventive measure. The switching cycles of the circuit breaker are recorded and added together, to form the basis of preventive maintenance work.

© Siemens AG 2012

Software and protection functions

SINAMICS GM150 in IGBT version	Description
Detecting the actual motor speed (option)	The SMC30 encoder module can be used to record the actual motor speed. The signals from the rotary pulse encoder are converted here and made available to the closed-loop control for evaluation via the DRIVE-CLiQ interface.
Operator protection	The cabinet doors of the power units are fitted with electromagnetic locks. This prevents the cabinet doors being opened while hazardous voltages are connected inside the cabinet.
EMERGENCY-OFF button	The converters are equipped as standard with an EMERGENCY-OFF button with protective collar which is fitted in the cabinet door. The contacts of the button are connected in parallel to the terminal strip so they can be integrated in a protection concept on the plant side. EMERGENCY-OFF stop category 0 is set as standard for an uncontrolled shutdown (DIN EN 60204-1/VDE 0113-1 (IEC 60204-1)). The function includes voltage disconnection of the converter output through the circuit breaker. The motor coasts in the process. EMERGENCY-STOP category 1 is optionally available for a controlled shutdown (option **L60**).
Insulation monitoring	The converters feature insulation monitoring of the complete electrical circuit from the secondary side of the transformer to the stator windings of the motor.
Monitoring of the peripherals	An extensive package of options for I/O monitoring (from the transformer and the motor through to the auxiliaries) is available.
Thermal overload protection	An alarm message is issued first when the overtemperature threshold is reached. If the temperature rises further, either a shutdown is carried out or automatic influencing of the output current so that a reduction in the thermal load is achieved. Following elimination of the cause of the fault (e.g. improvement in the ventilation), the original operating values are automatically resumed. For instance, for air-cooled converters and when filter mats are used, the amount of pollution of the filter mats is monitored by measuring the differential pressure which is then signaled. In the case of water-cooled converters, the water temperature and flow rate are recorded at several points in the cooling circuit and evaluated. Extensive self-diagnostic functions signal faults and therefore protect the converter.
Grounding switch (option)	If grounding on the infeed or motor side is required for safety and protection reasons, a motorized grounding switch can be ordered. For safety reasons, the converter controller locks these grounding switches against activation while voltage is still present. The control is integrated into the protection and monitoring chain of the converter. The grounding switches are inserted automatically when the standard grounding switches of the DC link are inserted.
Capacitor tripping device (option)	For applications in which the existing circuit breaker has no undervoltage coil and cannot be retrofitted there are capacitor tripping devices for 110 V to 120 V DC and for 220 V DC. The capacitor tripping device ensures that the circuit breaker on the plant side can still be reliably opened even if there is a power failure or the normal OFF command is not effective, e.g. because of a wire break.

AOP30 operator panel

The AOP30 operator panel is fitted into the cabinet door of the SINAMICS GM150 to enable operation, monitoring and commissioning.

It has the following features and characteristics:

- Graphical LCD display with backlighting for plain-text display and a bar display of process variables
- LEDs for displaying the operational status
- Help function describing causes of and remedies for faults and alarms
- Membrane keyboard with keypad for operational control of a drive
- Local/remote switchover to select the operator control location (priority assigned to operator panel or customer's terminal strip/PROFIBUS)
- Numeric keypad for input of setpoint or parameter values
- Function keys for prompted navigation in the menu
- Two-stage safety strategy to protect against accidental or unauthorized changes to settings. The keyboard lock disables operation of the drive from the operator panel, so that only parameter values and process variables can be displayed. A password can be used to prevent the unauthorized modification of converter parameters.

The operator panel languages – English, German, Spanish and Chinese – are stored on the CompactFlash card of the Control Unit.

© Siemens AG 2012

Selection and ordering data

Type rating kVA	Shaft output kW	Shaft output hp	Rated output current A	SINAMICS GM150 as IGBT version, air cooling, without sine-wave filter Order No.	Circuit version (page 2/4) Fig. No.
Output voltage 2.3 kV					
1000	820	1000	250	**6SL3810-2LM32-5AA0**	①
1200	1000	1250	300	**6SL3810-2LM33-0AA0**	①
1400	1150	1500	350	**6SL3810-2LM33-5AA0**	①
1600	1300	1750	400	**6SL3810-2LM34-0AA0**	①
1800	1500	2000	460	**6SL3810-2LM34-6AA1**	①
2100	1750	2400	530	**6SL3810-2LM35-3AA1**	①
2400	2000	2750	600	**6SL3810-2LM36-0AA0**	①
2700	2250	3100	700	**6SL3810-2LM37-0AA1**	①
3200	2650	3600	800	**6SL3810-2LM38-0AA1**	①
Output voltage 3.3 kV					
1000	850	1000	180	**6SL3810-2LN31-8AA0**	①
1300	1050	1250	220	**6SL3810-2LN32-2AA0**	①
1500	1250	1500	260	**6SL3810-2LN32-6AA0**	①
1700	1400	2000	300	**6SL3810-2LN33-0AA0**	①
2000	1650	2250	350	**6SL3810-2LN33-5AA0**	①
2300	1900	2500	400	**6SL3810-2LN34-0AA0**	①
2600	2150	3000	460	**6SL3810-2LN34-6AA1**	①
3000	2500	3380	530	**6SL3810-2LN35-3AA1**	①
3400	2850	3750	600	**6SL3810-2LN36-0AA0**	①
4000	3300	4500	700	**6SL3810-2LN37-0AA1**	①
4600	3800	5000	800	**6SL3810-2LN38-0AA1**	①
5300	4450	6200	2 × 465	**6SL3810-2LN38-8AA1**	③
6300	5300	7000	2 × 550	**6SL3810-2LN41-1AA0**	③
7100	6000	8000	2 × 625	**6SL3810-2LN41-2AA1**	③
8000	6700	9500	2 × 700	**6SL3810-2LN41-4AA1**	③
Output voltage 4.16 kV					
1300	1000	1500	180	**6SL3810-2LP31-8AA0**	①
1600	1300	1750	220	**6SL3810-2LP32-2AA0**	①
1900	1550	2000	260	**6SL3810-2LP32-6AA0**	①
2200	1800	2500	300	**6SL3810-2LP33-0AA0**	①
2500	2100	3000	350	**6SL3810-2LP33-5AA0**	①
2900	2400	3250	400	**6SL3810-2LP34-0AA0**	①
3300	2800	3800	460	**6SL3810-2LP34-6AA1**	①
3800	3100	4100	530	**6SL3810-2LP35-3AA1**	①
4300	3600	5000	600	**6SL3810-2LP36-0AA0**	①
5000	4150	5650	700	**6SL3810-2LP37-0AA1**	①
5800	4800	6600	800	**6SL3810-2LP38-0AA1**	①
6700	5650	7600	2 × 465	**6SL3810-2LP38-8AA1**	③
7900	6600	9000	2 × 550	**6SL3810-2LP41-1AA0**	③
9000	7600	10250	2 × 625	**6SL3810-2LP41-2AA1**	③
10100	8500	11500	2 × 700	**6SL3810-2LP41-4AA1**	③

Type rating kVA	Shaft output kW	Shaft output hp	Rated output current A	SINAMICS GM150 as IGBT version, air cooling, with sine-wave filter Order No.	Circuit version (page 2/5) Fig. No.
Output voltage 2.3 kV					
850	700	900	210	**6SL3810-2LM32-5AA0-Z Y15**	④
1000	800	1000	250	**6SL3810-2LM33-0AA0-Z Y15**	④
1150	950	1250	290	**6SL3810-2LM33-5AA0-Z Y15**	④
1300	1100	1500	330	**6SL3810-2LM34-0AA0-Z Y15**	④
1450	1200	1600	390	**6SL3810-2LM34-6AA1-Z Y15**	④
1650	1350	1850	420	**6SL3810-2LM35-3AA1-Z Y15**	④
2000	1650	2250	500	**6SL3810-2LM36-0AA0-Z Y15**	④
–	–	–	–	– –	–
–	–	–	–	– –	–
Output voltage 3.3 kV					
850	700	900	150	**6SL3810-2LN31-8AA0-Z Y15**	④
1100	900	1150	190	**6SL3810-2LN32-2AA0-Z Y15**	④
1250	1050	1250	220	**6SL3810-2LN32-6AA0-Z Y15**	④
1450	1200	1500	250	**6SL3810-2LN33-0AA0-Z Y15**	④
1700	1400	1750	300	**6SL3810-2LN33-5AA0-Z Y15**	④
1950	1600	2000	340	**6SL3810-2LN34-0AA0-Z Y15**	④
2350	1850	2500	410	**6SL3810-2LN34-6AA1-Z Y15**	④
2600	2100	2850	440	**6SL3810-2LN35-3AA1-Z Y15**	④
2900	2450	3250	510	**6SL3810-2LN36-0AA0-Z Y15**	④
–	–	–	–	– –	–
–	–	–	–	– –	–
4750	3650	5100	830	**6SL3810-2LN38-8AA1-Z Y15**	⑥
5350	4500	6000	940	**6SL3810-2LN41-1AA0-Z Y15**	⑥
–	–	–	–	– –	–
–	–	–	–	– –	–
Output voltage 4.16 kV					
1100	900	1250	150	**6SL3810-2LP31-8AA0-Z Y15**	④
1350	1150	1500	190	**6SL3810-2LP32-2AA0-Z Y15**	④
1600	1300	1750	220	**6SL3810-2LP32-6AA0-Z Y15**	④
1850	1550	2000	260	**6SL3810-2LP33-0AA0-Z Y15**	④
2100	1750	2250	290	**6SL3810-2LP33-5AA0-Z Y15**	④
2450	2000	2750	340	**6SL3810-2LP34-0AA0-Z Y15**	④
2950	2400	3250	410	**6SL3810-2LP34-6AA1-Z Y15**	④
3250	2600	3600	480	**6SL3810-2LP35-3AA1-Z Y15**	④
3600	3000	4000	500	**6SL3810-2LP36-0AA0-Z Y15**	④
–	–	–	–	– –	–
–	–	–	–	– –	–
6000	5100	6800	830	**6SL3810-2LP38-8AA1-Z Y15**	⑥
6650	5500	7500	920	**6SL3810-2LP41-1AA0-Z Y15**	⑥
–	–	–	–	– –	–
–	–	–	–	– –	–

Special version **"–Z"**

The order code **Y15** (sine-wave filter) must be additionally specified and requires plain text
(see Description of the options, Page 6/42).

© Siemens AG 2012

Selection and ordering data

Type rating	Shaft output		Rated output current	SINAMICS GM150 as IGBT version, water cooling, without sine-wave filter	Circuit version (page 2/4)
kVA	kW	hp	A	Order No.	Fig. No.
Output voltage 2.3 kV					
2000	1650	2250	500	**6SL3815-2LM35-0AA0**	①
2200	1800	2500	550	**6SL3815-2LM35-5AA0**	①
2400	2000	2750	600	**6SL3815-2LM36-0AA1**	①
2600	2150	2950	660	**6SL3815-2LM36-6AA1**	①
2900	2450	3250	740	**6SL3815-2LM37-4AA0**	①
3200	2650	3500	800	**6SL3815-2LM38-0AA0**	①
3500	2900	3850	880	**6SL3815-2LM38-8AA1**	①
4000	3300	4400	1000	**6SL3815-2LM41-0AA1**	①
Output voltage 3.3 kV					
2000	1650	2250	350	**6SL3815-2LN33-5AA0**	①
2300	1900	2500	400	**6SL3815-2LN34-0AA0**	①
2600	2150	3000	450	**6SL3815-2LN34-5AA0**	①
2900	2400	3250	500	**6SL3815-2LN35-0AA0**	①
3100	2650	3500	550	**6SL3815-2LN35-5AA0**	①
3400	2800	3800	600	**6SL3815-2LN36-0AA1**	①
3800	3150	4200	660	**6SL3815-2LN36-6AA1**	①
4200	3500	4500	740	**6SL3815-2LN37-4AA0**	①
4600	3800	5000	800	**6SL3815-2LN38-0AA0**	①
5100	4250	6000	880	**6SL3815-2LN38-8AA1**	①
5700	4700	6150	1000	**6SL3815-2LN41-0AA1**	①
6300	5300	7000	2 × 550	**6SL3815-2LN41-1AA1**	③
6800	5600	7400	2 × 600	**6SL3815-2LN41-2AA1**	③
7400	6200	8000	2 × 650	**6SL3815-2LN41-3AA0**	③
8000	6700	9000	2 × 700	**6SL3815-2LN41-4AA0**	③
9100	7600	10200	2 × 800	**6SL3815-2LN41-6AA1**	③
10300	8600	11500	2 × 900	**6SL3815-2LN41-8AA1**	③
Output voltage 4.16 kV					
2000	1700	2250	280	**6SL3815-2LP32-8AA0**	①
2200	1850	2500	310	**6SL3815-2LP33-1AA0**	①
2500	2100	2750	350	**6SL3815-2LP33-5AA0**	①
2900	2400	3000	400	**6SL3815-2LP34-0AA0**	①
3200	2700	3500	450	**6SL3815-2LP34-5AA0**	①
3600	3000	4000	500	**6SL3815-2LP35-0AA0**	①
4000	3300	4500	550	**6SL3815-2LP35-5AA0**	①
4300	3600	4850	600	**6SL3815-2LP36-0AA1**	①
4800	4000	5450	660	**6SL3815-2LP36-6AA1**	①
5300	4500	6000	740	**6SL3815-2LP37-4AA0**	①
5800	4800	6500	800	**6SL3815-2LP38-0AA0**	①
6400	5300	7150	880	**6SL3815-2LP38-8AA1**	①
7200	5900	8000	1000	**6SL3815-2LP41-0AA1**	①
7900	6600	9000	2 × 550	**6SL3815-2LP41-1AA1**	③
8600	7150	9500	2 × 600	**6SL3815-2LP41-2AA1**	③
9400	7900	10000	2 × 650	**6SL3815-2LP41-3AA0**	③
10100	8500	11000	2 × 700	**6SL3815-2LP41-4AA0**	③
11500	9600	13000	2 × 800	**6SL3815-2LP41-6AA1**	③
13000	11250	15300	2 × 900	**6SL3815-2LP41-8AA1**	③

Type rating	Shaft output		Rated output current	SINAMICS GM150 as IGBT version, water cooling, with sine-wave filter	Circuit version (page 2/5)
kVA	kW	hp	A	Order No.	Fig. No.
Output voltage 2.3 kV					
1500	1250	1500	380	**6SL3815-2LM35-0AA0-Z Y15**	④
1650	1350	1750	410	**6SL3815-2LM35-5AA0-Z Y15**	④
2150	1790	2400	540	**6SL3815-2LM36-0AA1-Z Y15**	④
2200	1850	2500	550	**6SL3815-2LM37-4AA0-Z Y15**	④
2350	1950	2550	590	**6SL3815-2LM36-6AA1-Z Y15**	④
2400	2000	2750	600	**6SL3815-2LM38-0AA0-Z Y15**	④
Output voltage 3.3 kV					
1550	1300	1750	270	**6SL3815-2LN33-5AA0-Z Y15**	④
1750	1450	2000	310	**6SL3815-2LN34-0AA0-Z Y15**	④
2000	1650	2250	350	**6SL3815-2LN34-5AA0-Z Y15**	④
2150	1800	2500	380	**6SL3815-2LN35-0AA0-Z Y15**	④
2350	1950	2750	410	**6SL3815-2LN35-5AA0-Z Y15**	④
3100	2550	3400	540	**6SL3815-2LN36-0AA1-Z Y15**	④
3200	2700	3500	560	**6SL3815-2LN37-4AA0-Z Y15**	④
3400	2800	3700	590	**6SL3815-2LN36-6AA1-Z Y15**	④
3500	2900	4000	610	**6SL3815-2LN38-0AA0-Z Y15**	④
5500	4550	6000	960	**6SL3815-2LN41-1AA1-Z Y15**	⑥
5600	4700	6250	980	**6SL3815-2LN41-3AA0-Z Y15**	⑥
6050	5100	6500	1060	**6SL3815-2LN41-4AA0-Z Y15**	⑥
6100	5100	7000	1080	**6SL3815-2LN41-2AA1-Z Y15**	⑥
Output voltage 4.16 kV					
1600	1300	1750	220	**6SL3815-2LP32-8AA0-Z Y15**	④
1750	1450	2000	240	**6SL3815-2LP33-1AA0-Z Y15**	④
1950	1600	2250	270	**6SL3815-2LP33-5AA0-Z Y15**	④
2250	1850	2500	310	**6SL3815-2LP34-0AA0-Z Y15**	④
2500	2100	2750	350	**6SL3815-2LP34-5AA0-Z Y15**	④
2800	2350	3000	390	**6SL3815-2LP35-0AA0-Z Y15**	④
3100	2600	3500	430	**6SL3815-2LP35-5AA0-Z Y15**	④
3900	3250	4450	540	**6SL3815-2LP36-0AA1–Z Y15**	④
4100	3450	4500	570	**6SL3815-2LP37-4AA0-Z Y15**	④
4250	3550	4750	590	**6SL3815-2LP36-6AA1–Z Y15**	④
4500	3800	5000	625	**6SL3815-2LP38-0AA0-Z Y15**	④
7150	5900	7950	960	**6SL3815-2LP41-1AA1–Z Y15**	⑥
7350	6200	8000	1020	**6SL3815-2LP41-3AA0-Z Y15**	⑥
7700	6350	8600	1080	**6SL3815-2LP41-2AA1–Z Y15**	⑥
7950	6600	9000	1100	**6SL3815-2LP41-4AA0-Z Y15**	⑥

The order code **Y15** (sine-wave filter) must be additionally specified and requires plain text
(see Description of the options, Page 6/42).

© Siemens AG 2012

Options

When ordering a converter with options, add **"-Z"** to the order number of the converter, followed by the order code(s) for the desired option(s).

Example:

6SL3810-2LM32-5AA0-Z
+N15+L60+...

In the following tables, related options are arranged in groups. Whether the options can be combined or are mutually exclusive is indicated within these groups. A detailed description of the options can be found in Chapter 6.

Input-side options		**N15**	**N20**	**N21**	**N13**
24-pulse Basic Line Module	**N15**		✓	✓	–
Capacitor tripping device 110 V to 120 V DC	**N20**	✓		–	✓
Capacitor tripping device 230 V DC	**N21**	✓	–		✓
Circuit breaker at converter input (for 24-pulse Basic Line Module on request)	**N13**	–	✓	✓	

Output-side options		**L08**	**Y15**	**L29**	**L52**	**L72**	**Y73**
Output reactor	**L08**		–	✓	✓	✓	✓
Sine-wave filter (plain text required)	**Y15**	–		✓	✓	✓	✓
Bidirectional synchronized bypass operation	**L29**	✓	✓		✓	✓	✓
Circuit breaker at converter output [1)]	**L52**	✓	✓	✓		✓	✓
Braking Module	**L72**	✓	✓	✓	✓		✓
Braking resistor	**Y73**	✓	✓	✓	✓	✓	

[1)] Option **L52** cannot be combined with option **L51** (disconnector at converter output).

Protective functions		**K80**	**L48**	**L49**	**L51**	**L60**	**M10**
Control of "Safe Torque Off" function (on request)	**K80**		✓	✓	✓	✓	✓
Make-proof grounding switch at converter input (motor-operated)	**L48**	✓		✓	✓	✓	✓
Make-proof grounding switch at converter output (motor-operated)	**L49**	✓	✓		✓	✓	✓
Disconnector at converter output [1)]	**L51**	✓	✓	✓		✓	✓
EMERGENCY-STOP, Stop Category 1 for controlled stopping	**L60**	✓	✓	✓	✓		✓
Safety interlocking system	**M10**	✓	✓	✓	✓	✓	

[1)] Option **L51** cannot be combined with option **L52** (circuit breaker at converter output).

✓	Options can be combined
–	Options are mutually exclusive

© Siemens AG 2012

Options

Temperature sensing and evaluation (standard: 3 Pt100 inputs)		L80	L81	L82	L90	L91	L93	L95
2 thermistor motor protection relays for alarm and fault [1]	L80		–	–	✓	✓	✓	✓
2 x 2 thermistor protection relays for alarm and fault [1]	L81	–		–	✓	✓	✓	✓
3 x 2 thermistor protection relays for alarm and fault [1]	L82	–	–		✓	✓	✓	✓
Pt100 evaluation unit with 3 inputs [1]	L90	✓	✓	✓		–	–	–
2 Pt100 evaluation units with 3 inputs each [1]	L91	✓	✓	✓	–		–	–
Pt100 evaluation unit with 6 inputs and 2 analog outputs (outputs for display connected to the control system) [1]	L93	✓	✓	✓	–	–		–
Pt100 evaluation unit with 6 inputs for explosion-protected motors and 2 analog outputs [1]	L95	✓	✓	✓	–	–	–	

[1] Options **L..** cannot be combined with option **G61** (additional TM31 Terminal Module).

Increased degree of protection of the control cabinets in the air-cooled version (standard: IP22)		M11	M42
Dust protection	M11		✓
IP42 degree of protection	M42	✓	

Increased degree of protection of the control cabinets in the water-cooled version (standard: IP43)	
IP54 degree of protection	M54

Improvement in dust protection before commissioning in the water-cooled version	
Extended dust protection	M16

Controlled motor feeder for auxiliaries [1]		N30	N31	N32	N33
Controlled motor feeder for auxiliaries 440/480 V 3 AC, max. 4/4.8 kW	N30		–	–	–
Controlled motor feeder for auxiliaries 440/480 V 3 AC, max. 7/8 kW	N31	–		–	–
Controlled motor feeder for auxiliaries 440/480 V 3 AC, max. 11/12.7 kW	N32	–	–		–
Controlled motor feeder for auxiliaries 440/480 V 3 AC, max. 15/17.5 kW	N33	–	–	–	

[1] With the ON command at the converter, the contactor is **closed**, and with the OFF command, the contactor is **opened** (example: external fan on the motor). The supply voltage for the auxiliaries must be provided externally.

Controlled outgoing feeder for auxiliaries [1]		N35	N36	N37	N38
Controlled outgoing feeder for auxiliaries 230/120 V 1 AC, max. 1.2/1 kW	N35		–	–	–
Controlled outgoing feeder for auxiliaries 230/120 V 1 AC, max. 2.2/1.5 kW	N36	–		–	–
Controlled outgoing feeder for auxiliaries 230/120 V 1 AC, max. 3.5/2.1 kW	N37	–	–		–
Controlled outgoing feeder for auxiliaries 230/120 V 1 AC, max. 4.5/2.8 kW	N38	–	–	–	

[1] With the ON command at the converter, the contactor is **opened**, and with the OFF command, the contactor is **closed** (example: heater). The supply voltage for the auxiliaries must be provided externally.

✓	Options can be combined
–	Options are mutually exclusive

© Siemens AG 2012

Options

Air cooling design		M61	M64
Redundant fan in the power unit	**M61**		–
Converter prepared for connection to an external air discharge system, with internal cabinet fans	**M64**	–	

Connection of power and signal cables (standard: power cable connected from below, signal cable connected directly to the terminals of the Terminal Modules)		M13	M78	M32	M33	M34	M36
Power cable connected at the converter input from the top	**M13**		✓	✓	✓	✓	✓
Power cable connected at the converter output from the top	**M78**	✓		✓	✓	✓	✓
Customer's terminal strip with spring-loaded terminals for signal cables up to 2.5 mm^2	**M32**	✓	✓		–	✓	✓
Customer's terminal strip with screw terminals for signal cables up to 2.5 mm^2	**M33**	✓	✓	–		✓	✓
Auxiliary voltage and signal cables connected from the top [1]	**M34**	✓	✓	✓	✓		✓
Cable entry, brass for power cables	**M36**	✓	✓	✓	✓	✓	

[1] Option **M34** can only be ordered in combination with one of the options **M32** or **M33**.

Operator control and display instruments in the door of the control cabinet		K20	K21	K22
Indicator lights in the cabinet door	**K20**		–	–
Display instruments in the cabinet door for voltage, current, speed and power as well as indicator lights	**K21**	–		–
Display instruments in the cabinet door for current, speed, power and winding temperature as well as indicator lights	**K22**	–	–	

Interface modules for connection to external bus systems (standard: PROFIBUS (slave))		G20	G21	G22	G23	G24	G25	G35
CAN bus interface (CANopen, on request)	**G20**		–	–	–	–	–	–
Modbus Plus interface (on request)	**G21**	–		–	–	–	–	–
Modbus RTU slave interface (on request)	**G22**	–	–		–	–	–	–
DeviceNet interface (on request)	**G23**	–	–	–		–	–	–
PROFINET interface (via CBE20) (on request)	**G24**	–	–	–	–		–	–
TeleService connection, TS Adapter II, analog modem	**G25**	–	–	–	–	–		–
TeleService connection, TS Adapter II, ISDN modem	**G35**	–	–	–	–	–	–	

✓	Options can be combined
–	Options are mutually exclusive

© Siemens AG 2012

Options

Interface modules for additional customer connections and speed encoders		G61	G62	G63	K50
Additional TM31 Terminal Module [1]	**G61**		✓	✓	✓
Second additional TM31 Terminal Module [1]	**G62**	✓		✓	✓
Additional TM15 Terminal Module	**G63**	✓	✓		✓
Sensor Module Cabinet-Mounted SMC30	**K50**	✓	✓	✓	

[1] For the exclusions for options **G61** and **G62** see the description of the options, Page 6/16.

Other interface modules		G70	G71
Pulse distributor for transferring the speed encoder signal (on request)[1]	**G70**		✓
Optical bus terminal (OBT) for PROFIBUS (on request) [2]	**G71**	✓	

[1] Option **G70** can only be ordered in combination with option **K50** (Sensor Module Cabinet-Mounted SMC30).
[2] Option **G71** cannot be combined with options **G20 toG24** and **G34** (access to other bus systems), as well as **G25** and **G35** (Teleservice).

Additional analog inputs/outputs (isolated)		E86	E87
Additional analog inputs (isolated) [1]	**E86**		✓
Additional analog outputs (isolated) [1]	**E87**	✓	

[1] Options **E86** and **E87** cannot be combined with option **G62** (additional TM31 Terminal Module).

Industry-specific options		B00	M66
NAMUR terminal strip	**B00**		✓
Suitable for marine applications	**M66**	✓	
The following option is included as standard in option **M66:**			
Cabinet anti-condensation heating	**L55**	✓	✓
The following options are required for safety-relevant drives in addition to option **M66**:			
Individual certification of the converter by the relevant certification societies [1]	**E11 to E71**	✓	✓

[1] An inquiry is required for options **M66** and **E11 to E71** in conjunction with option **Y15** (sine-wave filter).

✓	Options can be combined
–	Options are mutually exclusive

© Siemens AG 2012

Options

Individual certification of the converters for use on ships (includes option M66) [1]		E11	E21	E31	E51	E61	E71
Suitable for marine use with individual certificate from Germanische Lloyd (GL)	**E11**		–	–	–	–	–
Suitable for marine use with individual certificate from Lloyds Register (LR)	**E21**	–		–	–	–	–
Suitable for marine use with individual certificate from Bureau Veritas (BV)	**E31**	–	–		–	–	–
Suitable for marine use with individual certificate from Det Norske Veritas (DNV)	**E51**	–	–	–		–	–
Suitable for marine use with individual certificate from the American Bureau of Shipping (ABS)	**E61**	–	–	–	–		–
Suitable for marine use with individual certificate from the Chinese Classification Society (CCS)	**E71**	–	–	–	–	–	

[1] An inquiry is required for options **M66** and **E11 to E71** in conjunction with option **Y15** (sine-wave filter).

Functional options		E01	E02	E03	L32
Control for separately excited synchronous motors with slipring excitation (on request)	**E01**		–	–	✓
Control for separately excited synchronous motors with brushless excitation system (on request)	**E02**	–		–	✓
Closed-loop control of permanent-magnet synchronous motors (on request) [1]	**E03**	–	–		✓
Automatic restart	**L32**	✓	✓	✓	

[1] Option **E03** can only be ordered in combination with option **L52** (circuit breaker at the converter output).

Documentation (standard: PDF format in English on CD-ROM)		B43	B44	B45	D02	D15	Y10
Production flowchart: Generated once	**B43**		–	–	✓	✓	✓
Production flowchart: Updated every two weeks	**B44**	–		–	✓	✓	✓
Production flowchart: Updated every month	**B45**	–	–		✓	✓	✓
Circuit diagrams, terminal diagrams and dimension drawings in DXF format [1]	**D02**	✓	✓	✓		✓	✓
One set of printed documentation (multiple orders possible)	**D15**	✓	✓	✓	✓		✓
Circuit diagrams with customer-specific text field (plain text required) [1]	**Y10**	✓	✓	✓	✓	✓	

[1] The equipment-specific documents (circuit diagrams etc.) are only available in English/German.

✓	Options can be combined
–	Options are mutually exclusive

© Siemens AG 2012

Options

Documentation in languages (standard: PDF format in English on CD-ROM)		D00	D55	D56	D57	D72	D76	D77	D78	D79	D84
Documentation in German	**D00**		–	–	–	–	✓	–	–	–	–
Documentation in Polish	**D55**	–		–	–	–	✓	–	–	–	–
Documentation in Russian	**D56**	–	–		–	–	✓	–	–	–	–
Documentation in Japanese (on request)	**D57**	–	–	–		–	✓	–	–	–	–
Documentation in Italian (on request)	**D72**	–	–	–	–		✓	–	–	–	–
Documentation in English (additional CD-ROM in English, irrespective of the selected language)	**D76**	✓	✓	✓	✓	✓		✓	✓	✓	✓
Documentation in French	**D77**	–	–	–	–	–	✓		–	–	–
Documentation in Spanish	**D78**	–	–	–	–	–	✓	–		–	–
Documentation in Portuguese (Brazil)	**D79**	–	–	–	–	–	✓	–	–		–
Documentation in Chinese	**D84**	–	–	–	–	–	✓	–	–	–	

Rating plate language (standard: English/German)		T58	T60	T80	T82	T85	T86	T90	T91
Rating plate in English/French	**T58**		–	–	–	–	–	–	–
Rating plate in English/Spanish	**T60**	–		–	–	–	–	–	–
Rating plate in English/Italian	**T80**	–	–		–	–	–	–	–
Rating plate in English/Portuguese (on request)	**T82**	–	–	–		–	–	–	–
Rating plate in English/Russian (on request)	**T85**	–	–	–	–		–	–	–
Rating plate in English/Polish (on request)	**T86**	–	–	–	–	–		–	–
Rating plate in English/Japanese (on request)	**T90**	–	–	–	–	–	–		–
Rating plate in English/Chinese (on request)	**T91**	–	–	–	–	–	–	–	

Auxiliary voltage supply	
Auxiliary voltage other than N/400 V/3 AC	**C30 to C55**

✓	Options can be combined
–	Options are mutually exclusive

© Siemens AG 2012

Options

Converter acceptance inspections in presence of customer		F03	F29	F73	F77	F79	F97
Visual acceptance of converter	**F03**		–	–	–	–	–
Noise measurement under no-load conditions	**F29**	–		✓	✓	✓	–
Functional acceptance of converter with inductive load	**F73**	–	✓		✓	✓	–
Acceptance of the converter insulation test[1)]	**F77**	–	✓	✓		✓	–
Test of the interface between the converter and customer equipment (5 hours) [1)]	**F79**	–	✓	✓	✓		–
Customer-specific system acceptance tests (on request)	**F97**	–	–	–	–	–	

[1)] Options **F77** and **F79** can only be ordered in conjunction with option **F73**.

Cooling unit (water-cooled converters, standard: Cooling unit with redundant pumps and a stainless steel plate-type heat exchanger)		W02	W11	W12	W14	W20	Y40
Cooling unit with redundant stainless steel plate-type heat exchangers	**W02**		–	–	–	✓	–
Cooling unit with titanium plate-type heat exchanger	**W11**	–		–	–	✓	–
Cooling unit with redundant titanium plate-type heat exchangers	**W12**	–	–		–	✓	–
Converter without cooling unit (provided on the system side)	**W14**	–	–	–		–	–
Raw-water connection from the bottom	**W20**	✓	✓	✓	–		✓
Raw water data that deviates from the technical data (on request) [1)]	**Y40**	–	–	–	–	✓	

[1)] Option **Y40** includes a cooling system which is adapted to the raw water data according to the customer's specifications.

✓	Options can be combined
–	Options are mutually exclusive

© Siemens AG 2012

Options

Extension of the liability for defects		Q80	Q81	Q82	Q83	Q84	Q85
Extension of the liability for defects period by 12 months to a total of 24 months	**Q80**		–	–	–	–	–
Extension of the liability for defects period by 18 months to a total of 30 months	**Q81**	–		–	–	–	–
Extension of the liability for defects period by 24 months to a total of 36 months	**Q82**	–	–		–	–	–
Extension of the liability for defects period by 30 months to a total of 42 months	**Q83**	–	–	–		–	–
Extension of the liability for defects period by 36 months to a total of 48 months	**Q84**	–	–	–	–		–
Extension of the liability for defects period by 48 months to a total of 60 months	**Q85**	–	–	–	–	–	

Miscellaneous options		L50	L53	L55	Y05	Y09
Cabinet lighting and service socket in the control section	**L50**		✓	✓	✓	✓
UPS for the power supply of the open-loop and closed-loop control (on request)	**L53**	✓		✓	✓	✓
Anti-condensation heating for the cabinet	**L55**	✓	✓		✓	✓
Customer-specific rating plate	**Y05**	✓	✓	✓		✓
Special paint finish according to RAL.... (in a color other than RAL 7035; plain text required)	**Y09**	✓	✓	✓	✓	

✓	Options can be combined
–	Options are mutually exclusive

© Siemens AG 2012

Technical specifications

General technical data	
Power components	Diodes, 3.3 kV IGBTs
Line-side converter	
• Standard	Lower power ratings at 2.3 ... 4.16 kV: 12-pulse diode rectifier (Basic Line Module) Higher power ratings at 2.3 ... 4.16 kV: 24-pulse diode rectifier (Basic Line Module)
• Option	Lower power ratings at 2.3 ... 4.16 kV: 24-pulse diode rectifier (Basic Line Module)
Line-side converter	Inverter (Motor Module)
Closed-loop control	Closed-loop vector control
Drive quadrants	2 (driving 2 directions of rotation)
Electrical isolation, power unit/ open-loop and closed-loop control	Fiber-optic cable, insulating transformer
Auxiliary power supply (for fans, coolant pumps, precharging the DC link capacitors, open-loop and closed-loop control)	230 V 1 AC ±10 %, 50/60 Hz ±3 % and 400 V 3 AC ±10 %, 50/60 Hz ±3 % or another auxiliary voltage (options **C30 to C55**)
Installation altitude	≤ 1000 m above sea level: 100 % load capability > 1000 ... 4000 m above sea level: current derating required > 2000 ... 4000 m above sea level: voltage derating required in addition
Insulation	According to EN 50178/VDE 0160 (IEC 62103): Pollution degree 2 (without conductive pollution), condensation not permissible
Degree of protection	According to EN 60529/VDE 0470 T1 (IEC 60529):
• Standard	IP22 (air cooling), IP43 (water cooling)
• Option	IP42 (air cooling), IP54 (water cooling)
Protection class	I according to EN 61800-5-1/VDE 0160 T105 (IEC 61800-5-1)
Shock-hazard protection	EN 50274/VDE 0660 T514 and BGV A3 when used for the intended application
Interference transmission	This drive unit is part of a PDS, Category C4 according to EN 61800-3/VDE 0160 T103 (IEC 61800-3). It has not been designed to be connected to the public line supply. EMC disturbances can occur when connected to these line supplies. The essential requirements placed on EMC protection for the drive system should be secured using an EMC plan on the customer side.
Paint finish/color	Indoor requirements/RAL 7035, light gray
Applicable standards and directives	
• Standards	EN 61800-3/VDE 0160 T103 (IEC 61800-3) EN 61800-4/VDE 0160 T104 (IEC 61800-4), however, only if referenced in the standards EN 61800-3 or EN 61800-5-1 EN 61800-5-1/VDE 0160 T105 (IEC 61800-5-1) EN 60146-1-1/VDE 0558 T11 (IEC 60146-1-1) EN 50178/VDE 0160 (IEC 62103) EN 60204-11/VDE 0113 T11 (IEC 60204-11), however, structuring principles and reference marking according to EN 61346-1 instead of EN 81346-1
• EU directives	2006/95/EC + amendments (Low Voltage Directive) 2004/108/EC + amendments (Electromagnetic Compatibility)
Air cooling	Forced air cooling with integrated fans
Water cooling	Water-water cooling unit, internal circuit, deionized water
Permissible coolant temperature (raw water)	
• Inlet	5 ... 35 °C
• Discharge, max.	40 °C

Rated data			
Output voltage	**2.3 kV**	**3.3 kV**	**4.16 kV**
Input voltage	2 × 1.2 kV	2 × 1.7 kV	2 × 2.2 kV
Tolerance of input voltage	±10 %	±10 %	±10 %
Line frequency	50/60 Hz ± 3 %	50/60 Hz ± 3 %	50/60 Hz ± 3 %
Line power factor fundamental mode	> 0.96	> 0.96	> 0.96

© Siemens AG 2012

Technical specifications

	Operation of induction motors				Operation of separately excited synchronous motors	
	Without speed encoder		With speed encoder		With speed encoder	
	Without sine-wave filter	With sine-wave filter	Without sine-wave filter	With sine-wave filter	Without sine-wave filter	With sine-wave filter
Control properties						
Operating range						
• Lower limit of speed control range (% of rated motor speed)	5 %	5 %	0 %	0 %	0 %	0 %
• Max. permissible output frequency	250 Hz	66 Hz	250 Hz	66 Hz	90 Hz	66 Hz
• Field-shunting range	1:3	1:1.1	1:3	1:1.1	1:4	1:1.1
Stationary operation						
• Speed accuracy (% of rated motor speed)	±0.2 % (from 5 % of rated speed)	±0.2 % (from 5 % of rated speed)	±0.01 %	±0.01 %	±0.01 %	±0.01 %
• Torque accuracy (% of rated torque)	±5 % (from 5 % of rated speed)	±5 % (from 5 % of rated speed)	±5 %	±5 %	±2 %	±5 %
Dynamic operation						
• Torque rise time	5 ms	20 ms	5 ms	20 ms	5 ms	20 ms

	Storage	Transport	Operation
Climatic ambient conditions			
Ambient temperature	-25 ... +70 °C	-25 ... +70 °C	5 ... 40 °C (air cooling) 5 ... 45 °C (water cooling)
Relative air humidity	5 ... 95 % (only slight condensation permitted; converter must be completely dry before commissioning)	5 ... 75 %	5 ... 85 % (condensation not permissible)
Other climatic conditions in accordance with Class	1K3 according to EN 60721-3-1 (IEC 60721-3-1) (icing not permitted)	2K2 according to EN 60721-3-2 (IEC 60721-3-2)	3K3 according to EN 60721-3-3 (IEC 60721-3-3)
Degree of pollution	2 without conductive pollution according to EN 50178/VDE 0160 (IEC 62103)	2 without conductive pollution according to EN 50178/VDE 0160 (IEC 62103)	2 without conductive pollution according to EN 50178/VDE 0160 (IEC 62103)
Mechanical ambient conditions			
Dynamic stress			
• Deflection	1.5 mm at 2 ... 9 Hz	3.5 mm at 2 ... 9 Hz	0.3 mm at 2 ... 9 Hz
• Acceleration	5 m/s^2 at 9 ... 200 Hz	10 m/s^2 at 9 ... 200 Hz 15 m/s^2 at 200 ... 500 Hz	1 m/s^2 at 9 ... 200 Hz
Other mechanical conditions in accordance with Class (increased strength for marine duty)	1M2 according to EN 60721-3-1 (IEC 60721-3-1)	2M2 according to EN 60721-3-2 (IEC 60721-3-2)	3M1 according to EN 60721-3-3 (IEC 60721-3-3)
Other ambient conditions			
Biological ambient conditions in accordance with Class	1B1 according to EN 60721-3-1 (IEC 60721-3-1)	2B1 according to EN 60721-32- (IEC 60721-3-2)	3B2 according to EN 60721-3-3 (IEC 60721-3-3) (without harmful flora)
Chemically active substances in accordance with Class	1C1 according to EN 60721-3-1 (IEC 60721-3-1)	2C1 according to EN 60721-3-2 (IEC 60721-3-2)	3C2 according to EN 60721-3-3 (IEC 60721-3-3) (no occurrence of salt mist)
Mechanically active substances in accordance with Class	1S1 according to EN 60721-3-1 (IEC 60721-3-1)	2S1 according to EN 60721-3-2 (IEC 60721-3-2)	3S1 according to EN 60721-3-3 (IEC 60721-3-3) (3S3 with water cooling and degree of protection IP54)

Note:

The values specified under storage and transport apply to suitably packed converters.

© Siemens AG 2012

Technical specifications

Derating for special installation conditions

Current derating

If the converters are operated at installation altitudes from 1000 m above sea level or at ambient/coolant temperatures > 40 °C for air cooling or with intake temperatures in the cooling unit > 35 °, derating factors k_H or k_T must be taken into account for the rated current (DIN 43671). For the permitted continuous current I:

$I \leq I_N \times k_H \times k_T$

I: permitted continuous current

I_N: rated current

Current derating as a function of the installation altitude (air cooling)

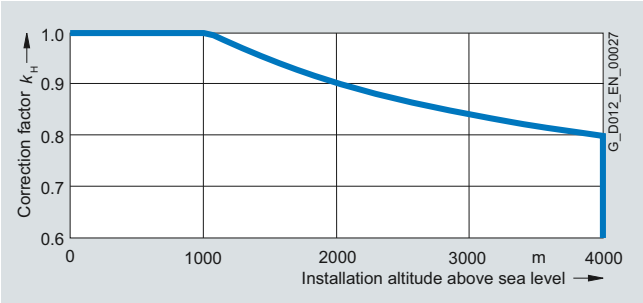

Derating factor k_H for air cooling

Current derating as a function of the installation altitude (water cooling)

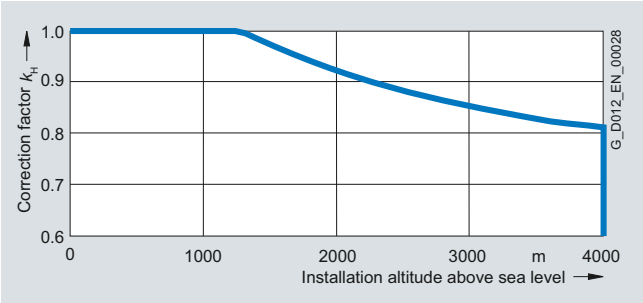

Derating factor k_H for water cooling

Current derating as a function of ambient temperature

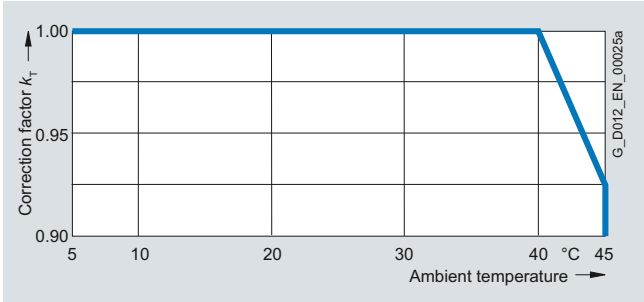

Derating factor k_T (ambient temperature)

Current derating as a function of the raw water intake temperature

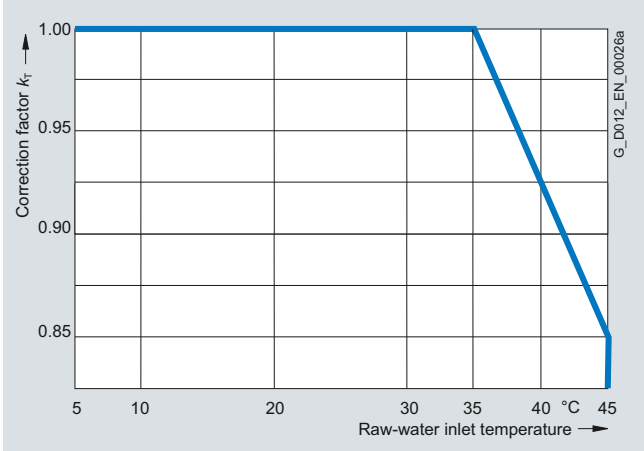

Derating factor k_T (raw water intake temperature)

Voltage derating

For installation altitudes >2000 m, according to DIN EN 60664-1/VDE 0110 (IEC 60664-1) in addition to a current derating, a voltage derating is also required. This depends on the air and creepage distances in the unit.

Voltage derating as a function of installation altitude

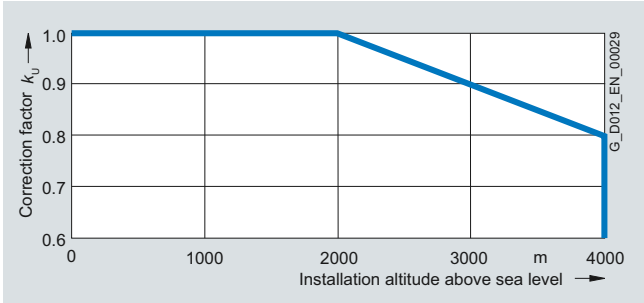

Derating factor k_U

© Siemens AG 2012

Technical specifications

Example 1 (air-cooled converter)

Derating data SINAMICS GM150 in IGBT version

Drive unit	6SL3810-2LP33-0AA0
Output voltage	4.16 kV
Input voltage	2 × 2.2 kV
Type rating	2200 kVA, 300 A
Installation altitude	3000 m
Ambient temperature, max.	30 °C
k_H (air cooling)	0.84
k_T (ambient temperature)	1.0
k_U	0.9

For the current, the following applies:

$I \leq I_N \times 0.84 \times 1.0 = I_N \times 0.84$

A current derating of 16 % and a voltage derating of 10 % are required. The converter may still be connected to a line supply voltage of 2 x 1.98 kV 3 AC.

The maximum available output current is 252 A.

Example 2 (water-cooled converter)

Derating data SINAMICS GM150 in IGBT version

Drive unit	6SL3815-2LN33-5AA0
Output voltage	3.3 kV
Input voltage	2 × 1.7 kV
Type rating	2000 kVA, 350 A
Installation altitude	2000 m
Raw water intake temperature	40 °C
k_H (water cooling)	0.925
k_T (raw water intake temperature)	0.925
k_U	1.0

For the current, the following applies:

$I \leq I_N \times 0.925 \times 0.925 = I_N \times 0.856$

A current derating of 14.4 % is required.

The maximum available output current is 299 A.

© Siemens AG 2012

Technical specifications

SINAMICS GM150 in IGBT version Air cooling, without sine-wave filter		6SL3810-2LM32-5AA0	6SL3810-2LM33-0AA0	6SL3810-2LM33-5AA0	6SL3810-2LM34-0AA0	6SL3810-2LM34-6AA1
Output voltage 2.3 kV						
Type rating	kVA	1000	1200	1400	1600	1800
Shaft output [1]	kW	820	1000	1150	1300	1500
	hp	1000	1250	1500	1750	2000
Rated output current	A	250	300	350	400	460
Input voltage	kV	2 × 1.2	2 × 1.2	2 × 1.2	2 × 1.2	2 × 1.2
Rated input current [1]	A	2 × 220	2 × 264	2 × 308	2 × 351	2 × 404
Power loss [2]	kW	15	18	21	24	27
Efficiency [2]	%	98.3	98.3	98.3	98.3	98.4
Typ. current demand of the auxiliary supply 230 V 1 AC, 50/60 Hz [3]	A	2.5	2.5	2.5	2.5	2.5
Max. current demand of the auxiliary supply 400 V 3 AC, 50/60 Hz [4]	A	27	27	27	27	27
Cooling air flow rate	m^3/s	1.6	1.6	1.6	1.6	1.6
Sound pressure level L_{pA} (1 m)	dB	78	80	80	80	80
Measuring surface level L_s (1 m)	dB	18	18	18	18	18
Cable cross-sections, line-side, max. connectable per phase [5] [6]	mm^2 (DIN VDE)	4 × 240	4 × 240	4 × 240	4 × 240	4 × 240
	AWG/MCM (NEC, CEC)	4 × 500 MCM	4 × 500 MCM	4 × 500 MCM	4 × 500 MCM	4 × 500 MCM
Cable cross-sections, motor-side, max. connectable per phase [5] [6]	mm^2 (DIN VDE)	3 × 240	3 × 240	3 × 240	3 × 240	3 × 240
	AWG/MCM (NEC, CEC)	3 × 500 MCM	3 × 500 MCM	3 × 500 MCM	3 × 500 MCM	3 × 500 MCM
PE connection, max. connection cross-section at the enclosure with M12 screw [5]	mm^2 (DIN VDE)	4 × 240	4 × 240	4 × 240	4 × 240	4 × 240
	AWG/MCM (NEC, CEC)	4 × 500 MCM	4 × 500 MCM	4 × 500 MCM	4 × 500 MCM	4 × 500 MCM
Degree of protection		IP22	IP22	IP22	IP22	IP22
Dimensions [7]						
• Width	mm	2420	2420	2420	2420	2420
• Height	mm	2570	2570	2570	2570	2570
• Depth	mm	1275	1275	1275	1275	1275
Circuit version (Page 2/4)	Fig. No.	①	①	①	①	①
Weight [7]	kg	1750	1750	1750	1750	1750

[1] The data for the rated input current and the power data in hp and kW are approximate values only; these have been calculated for operation with induction motors and for a typical motor power factor cos φ and motor efficiency. The calculation is based on the rated output current. In this case, the kW and hp values lie in a power range, which is obtained by selecting the following values: Motor power factor between 0.85 and 0.88 and a motor efficiency of 96 %. The rated input current also depends on the line power factor, for which a typical value of between 0.94 and 0.96 was assumed.
The hp data are based on the NEC and CEC guidelines for the North American market. The kW values are specified in multiples of 50. Both approximate values need to be adapted to the motor which is actually used.

[2] Without cooling system

[3] The typical current drawn (rms value; cos $\varphi_{typ.}$ = 0.6) of the supply for the converter open-loop/closed-loop control is specified. The separate supplies for the socket outlets/light or switched auxiliary power feeders (options **N35 to N38**) have not been taken into account. Values for the typical current drawn for special configurations (e.g. for dimensioning an upstream UPS) are available on request.
When using options **L48** (make-proof grounding switch at the converter input), **L49** (make-proof grounding switch at the converter output) or **L51** (disconnector at the converter output), it should further be taken into account that for switching operations, additional peak values of up to 10 A can occur for each make-proof grounding switch or disconnector. This corresponds to the starting current of a motor used to operate a switch, which decays from approx. 10 A to approx. 2 A in 200 ms. A switching operation takes a total time of approx. 2 s. All optionally used make-proof grounding switches or disconnectors are controlled via the manually-actuated make-proof grounding switch for the converter DC link (standard) and therefore switch simultaneously!

[4] Additional 20 A precharging current for 25 s.

[5] Data refer to a sub-system; for details about the number of sub-systems to be connected on the line or motor side, see Circuit versions, Page 2/4.

[6] The maximum permissible cable lengths must be observed (see Power cables, Page 9/13).

[7] The specified dimensions and weights include doors and panels, however no options.

© Siemens AG 2012

Technical specifications

SINAMICS GM150 in IGBT version Air cooling, without sine-wave filter		6SL3810-2LM35-3AA1	6SL3810-2LM36-0AA0	6SL3810-2LM37-0AA1	6SL3810-2LM38-0AA1
Output voltage 2.3 kV					
Type rating	kVA	2100	2400	2700	3200
Shaft output [1]	kW	1750	2000	2250	2650
	hp	2400	2750	3100	3600
Rated output current	A	530	600	700	800
Input voltage	kV	2 × 1.2	2 × 1.2	2 × 1.2	2 × 1.2
Rated input current [1]	A	2 × 465	2 × 539	2 × 614	2 × 702
Power loss [2]	kW	29	34	33	37
Efficiency [2]	%	98.6	98.4	98.6	98.6
Typ. current demand of the auxiliary supply 230 V 1 AC, 50/60 Hz [3]	A	2.5	2.5	2.5	2.5
Max. current demand of the auxiliary supply 400 V 3 AC, 50/60 Hz [4]	A	27	27	27	27
Cooling air flow rate	m^3/s	1.6	1.6	1.6	1.6
Sound pressure level L_{pA} (1 m)	dB	80	80	80	80
Measuring surface level L_s (1 m)	dB	18	18	18	18
Cable cross-sections, line-side, max. connectable per phase [5] [6]	mm^2 (DIN VDE)	4 × 240	4 × 240	4 × 240	4 × 240
	AWG/MCM (NEC, CEC)	4 × 500 MCM	4 × 500 MCM	4 × 500 MCM	4 × 500 MCM
Cable cross-sections, motor-side, max. connectable per phase [5] [6]	mm^2 (DIN VDE)	3 × 240	3 × 240	3 × 240	3 × 240
	AWG/MCM (NEC, CEC)	3 × 500 MCM	3 × 500 MCM	3 × 500 MCM	3 × 500 MCM
PE connection, max. connection cross-section at the enclosure with M12 screw [5]	mm^2 (DIN VDE)	4 × 240	4 × 240	4 × 240	4 × 240
	AWG/MCM (NEC, CEC)	4 × 500 MCM	4 × 500 MCM	4 × 500 MCM	4 × 500 MCM
Degree of protection		IP22	IP22	IP22	IP22
Dimensions [7]					
• Width	mm	2420	2420	2420	2420
• Height	mm	2570	2570	2570	2570
• Depth	mm	1275	1275	1275	1275
Circuit version (Page 2/4)	Fig. No.	①	①	①	①
Weight [7]	kg	1800	1800	1800	1800

[1] The data for the rated input current and the power data in hp and kW are approximate values only; these have been calculated for operation with induction motors and for a typical motor power factor cos φ and motor efficiency. The calculation is based on the rated output current. In this case, the kW and hp values lie in a power range, which is obtained by selecting the following values: Motor power factor between 0.85 and 0.88 and a motor efficiency of 96 %. The rated input current also depends on the line power factor, for which a typical value of between 0.94 and 0.96 was assumed.
The hp data are based on the NEC and CEC guidelines for the North American market. The kW values are specified in multiples of 50. Both approximate values need to be adapted to the motor which is actually used.

[2] Without cooling system

[3] The typical current drawn (rms value; cos $\varphi_{typ.}$ = 0.6) of the supply for the converter open-loop/closed-loop control is specified. The separate supplies for the socket outlets/light or switched auxiliary power feeders (options **N35 to N38**) have not been taken into account. Values for the typical current drawn for special configurations (e.g. for dimensioning an upstream UPS) are available on request.
When using options **L48** (make-proof grounding switch at the converter input), **L49** (make-proof grounding switch at the converter output) or **L51** (disconnector at the converter output), it should further be taken into account that for switching operations, additional peak values of up to 10 A can occur for each make-proof grounding switch or disconnector. This corresponds to the starting current of a motor used to operate a switch, which decays from approx. 10 A to approx. 2 A in 200 ms. A switching operation takes a total time of approx. 2 s. All optionally used make-proof grounding switches or disconnectors are controlled via the manually-actuated make-proof grounding switch for the converter DC link (standard) and therefore switch simultaneously!

[4] Additional 20 A precharging current for 25 s.

[5] Data refer to a sub-system; for details about the number of sub-systems to be connected on the line or motor side, see Circuit versions, Page 2/4.

[6] The maximum permissible cable lengths must be observed (see Power cables, Page 9/13).

[7] The specified dimensions and weights include doors and panels, however no options.

© Siemens AG 2012

Technical specifications

SINAMICS GM150 in IGBT version Air cooling, without sine-wave filter		6SL3810-2LN31-8AA0	6SL3810-2LN32-2AA0	6SL3810-2LN32-6AA0	6SL3810-2LN33-0AA0	6SL3810-2LN33-5AA0
Output voltage 3.3 kV						
Type rating	kVA	1000	1300	1500	1700	2000
Shaft output [1]	kW	850	1050	1250	1400	1650
	hp	1000	1250	1500	2000	2250
Rated output current	A	180	220	260	300	350
Input voltage	kV	2 × 1.7	2 × 1.7	2 × 1.7	2 × 1.7	2 × 1.7
Rated input current [1]	A	2 × 153	2 × 199	2 × 230	2 × 260	2 × 309
Power loss [2]	kW	15	20	23	26	28
Efficiency [2]	%	98.3	98.2	98.2	98.3	98.4
Typ. current demand of the auxiliary supply 230 V 1 AC, 50/60 Hz [3]	A	2.5	2.5	2.5	2.5	2.5
Max. current demand of the auxiliary supply 400 V 3 AC, 50/60 Hz [4]	A	27	27	27	27	27
Cooling air flow rate	m^3/s	2.4	2.4	2.4	2.4	2.4
Sound pressure level L_{pA} (1 m)	dB	78	78	78	80	80
Measuring surface level L_s (1 m)	dB	18	18	18	18	18
Cable cross-sections, line-side, max. connectable per phase [5] [6]	mm^2 (DIN VDE)	4 × 240	4 × 240	4 × 240	4 × 240	4 × 240
	AWG/MCM (NEC, CEC)	4 × 500 MCM	4 × 500 MCM	4 × 500 MCM	4 × 500 MCM	4 × 500 MCM
Cable cross-sections, motor-side, max. connectable per phase [5] [6]	mm^2 (DIN VDE)	3 × 240	3 × 240	3 × 240	3 × 240	3 × 240
	AWG/MCM (NEC, CEC)	3 × 500 MCM	3 × 500 MCM	3 × 500 MCM	3 × 500 MCM	3 × 500 MCM
PE connection, max. connection cross-section at the enclosure with M12 screw [5]	mm^2 (DIN VDE)	4 × 240	4 × 240	4 × 240	4 × 240	4 × 240
	AWG/MCM (NEC, CEC)	4 × 500 MCM	4 × 500 MCM	4 × 500 MCM	4 × 500 MCM	4 × 500 MCM
Degree of protection		IP22	IP22	IP22	IP22	IP22
Dimensions [7]						
• Width	mm	2420	2420	2420	2420	2420
• Height	mm	2570	2570	2570	2570	2570
• Depth	mm	1275	1275	1275	1275	1275
Circuit version (Page 2/4)	Fig. No.	①	①	①	①	①
Weight [7]	kg	1900	1900	1900	1900	1900

[1] The data for the rated input current and the power data in hp and kW are approximate values only; these have been calculated for operation with induction motors and for a typical motor power factor cos φ and motor efficiency. The calculation is based on the rated output current. In this case, the kW and hp values lie in a power range, which is obtained by selecting the following values: Motor power factor between 0.85 and 0.88 and a motor efficiency of 96 %. The rated input current also depends on the line power factor, for which a typical value of between 0.94 and 0.96 was assumed.
The hp data are based on the NEC and CEC guidelines for the North American market. The kW values are specified in multiples of 50. Both approximate values need to be adapted to the motor which is actually used.

[2] Without cooling system

[3] The typical current drawn (rms value; cos $\varphi_{typ.}$ = 0.6) of the supply for the converter open-loop/closed-loop control is specified. The separate supplies for the socket outlets/light or switched auxiliary power feeders (options **N35 to N38**) have not been taken into account. Values for the typical current drawn for special configurations (e.g. for dimensioning an upstream UPS) are available on request.
When using options **L48** (make-proof grounding switch at the converter input), **L49** (make-proof grounding switch at the converter output) or **L51** (disconnector at the converter output), it should further be taken into account that for switching operations, additional peak values of up to 10 A can occur for each make-proof grounding switch or disconnector. This corresponds to the starting current of a motor used to operate a switch, which decays from approx. 10 A to approx. 2 A in 200 ms. A switching operation takes a total time of approx. 2 s. All optionally used make-proof grounding switches or disconnectors are controlled via the manually-actuated make-proof grounding switch for the converter DC link (standard) and therefore switch simultaneously!

[4] Additional 20 A precharging current for 25 s.

[5] Data refer to a sub-system; for details about the number of sub-systems to be connected on the line or motor side, see Circuit versions, Page 2/4.

[6] The maximum permissible cable lengths must be observed (see Power cables, Page 9/13).

[7] The specified dimensions and weights include doors and panels, however no options.

© Siemens AG 2012

Technical specifications

SINAMICS GM150 in IGBT version Air cooling, without sine-wave filter		6SL3810-2LN34-0AA0	6SL3810-2LN34-6AA1	6SL3810-2LN35-3AA1	6SL3810-2LN36-0AA0	6SL3810-2LN37-0AA1	6SL3810-2LN38-0AA1
Output voltage 3.3 kV							
Type rating	kVA	2300	2600	3000	3400	4000	4600
Shaft output [1]	kW	1900	2150	2500	2850	3300	3800
	hp	2500	3000	3380	3750	4500	5000
Rated output current	A	400	460	530	600	700	800
Input voltage	kV	2 × 1.7	2 × 1.7	2 × 1.7	2 × 1.7	2 × 1.7	2 × 1.7
Rated input current [1]	A	2 × 360	2 × 406	2 × 465	2 × 531	2 × 606	2 × 700
Power loss [2]	kW	32	34	39	44	45	52
Efficiency [2]	%	98.4	98.5	98.5	98.5	98.7	98.7
Typ. current demand of the auxiliary supply 230 V 1 AC, 50/60 Hz [3]	A	2.5	2.5	2.5	2.5	2.5	2.5
Max. current demand of the auxiliary supply 400 V 3 AC, 50/60 Hz [4]	A	27	27	27	27	27	27
Cooling air flow rate	m^3/s	2.4	2.4	2.4	2.4	2.4	2.4
Sound pressure level L_{pA} (1 m)	dB	80	80	80	80	80	80
Measuring surface level L_s (1 m)	dB	18	18	18	18	18	18
Cable cross-sections, line-side, max. connectable per phase [5] [6]	mm^2 (DIN VDE)	4 × 240	4 × 240	4 × 240	4 × 240	4 × 240	4 × 240
	AWG/MCM (NEC, CEC)	4 × 500 MCM	4 × 500 MCM	4 × 500 MCM	4 × 500 MCM	4 × 500 MCM	4 × 500 MCM
Cable cross-sections, motor-side, max. connectable per phase [5] [6]	mm^2 (DIN VDE)	3 × 240	3 × 240	3 × 240	3 × 240	3 × 240	3 × 240
	AWG/MCM (NEC, CEC)	3 × 500 MCM	3 × 500 MCM	3 × 500 MCM	3 × 500 MCM	3 × 500 MCM	3 × 500 MCM
PE connection, max. connection cross-section at the enclosure with M12 screw [5]	mm^2 (DIN VDE)	4 × 240	4 × 240	4 × 240	4 × 240	4 × 240	4 × 240
	AWG/MCM (NEC, CEC)	4 × 500 MCM	4 × 500 MCM	4 × 500 MCM	4 × 500 MCM	4 × 500 MCM	4 × 500 MCM
Degree of protection		IP22	IP22	IP22	IP22	IP22	IP22
Dimensions [7]							
• Width	mm	2420	2420	2420	2420	2420	2420
• Height	mm	2570	2570	2570	2570	2570	2570
• Depth	mm	1275	1275	1275	1275	1275	1275
Circuit version (Page 2/4)	Fig. No.	①	①	①	①	①	①
Weight [7]	kg	1950	1950	1950	2000	2000	2000

1) The data for the rated input current and the power data in hp and kW are approximate values only; these have been calculated for operation with induction motors and for a typical motor power factor cos φ and motor efficiency. The calculation is based on the rated output current. In this case, the kW and hp values lie in a power range, which is obtained by selecting the following values: Motor power factor between 0.85 and 0.88 and a motor efficiency of 96 %. The rated input current also depends on the line power factor, for which a typical value of between 0.94 and 0.96 was assumed.
The hp data are based on the NEC and CEC guidelines for the North American market. The kW values are specified in multiples of 50. Both approximate values need to be adapted to the motor which is actually used.

2) Without cooling system

3) The typical current drawn (rms value; cos $\varphi_{typ.}$ = 0.6) of the supply for the converter open-loop/closed-loop control is specified. The separate supplies for the socket outlets/light or switched auxiliary power feeders (options **N35 to N38**) have not been taken into account. Values for the typical current drawn for special configurations (e.g. for dimensioning an upstream UPS) are available on request.
When using options **L48** (make-proof grounding switch at the converter input), **L49** (make-proof grounding switch at the converter output) or **L51** (disconnector at the converter output), it should further be taken into account that for switching operations, additional peak values of up to 10 A can occur for each make-proof grounding switch or disconnector. This corresponds to the starting current of a motor used to operate a switch, which decays from approx. 10 A to approx. 2 A in 200 ms. A switching operation takes a total time of approx. 2 s. All optionally used make-proof grounding switches or disconnectors are controlled via the manually-actuated make-proof grounding switch for the converter DC link (standard) and therefore switch simultaneously!

4) Additional 20 A precharging current for 25 s.

5) Data refer to a sub-system; for details about the number of sub-systems to be connected on the line or motor side, see Circuit versions, Page 2/4.

6) The maximum permissible cable lengths must be observed (see Power cables, Page 9/13).

7) The specified dimensions and weights include doors and panels, however no options.

© Siemens AG 2012

Technical specifications

SINAMICS GM150 in IGBT version Air cooling, without sine-wave filter		6SL3810-2LN38-8AA1	6SL3810-2LN41-1AA0	6SL3810-2LN41-2AA1	6SL3810-2LN41-4AA1
Output voltage 3.3 kV					
Type rating	kVA	5300	6300	7100	8000
Shaft output [1]	kW	4450	5300	6000	6700
	hp	6200	7000	8000	9500
Rated output current	A	2 × 465	2 × 550	2 × 625	2 × 700
Input voltage	kV	2 × (2 × 1.7)	2 × (2 × 1.7)	2 × (2 × 1.7)	2 × (2 × 1.7)
Rated input current [1]	A	2 × (2 × 410)	2 × (2 × 492)	2 × (2 × 546)	2 × (2 × 611)
Power loss [2]	kW	70	82	83	96
Efficiency [2]	%	98.5	98.5	98.6	98.6
Typ. current demand of the auxiliary supply 230 V 1 AC, 50/60 Hz [3]	A	4	4	4	4
Max. current demand of the auxiliary supply 400 V 3 AC, 50/60 Hz [4]	A	54	54	54	54
Cooling air flow rate	m^3/s	4.7	4.7	4.7	4.7
Sound pressure level L_{pA} (1 m)	dB	85	85	85	85
Measuring surface level L_s (1 m)	dB	18	19	18	18
Cable cross-sections, line-side, max. connectable per phase [5] [6]	mm^2 (DIN VDE)	4 × 240	4 × 240	4 × 240	4 × 240
	AWG/MCM (NEC, CEC)	4 × 500 MCM	4 × 500 MCM	4 × 500 MCM	4 × 500 MCM
Cable cross-sections, motor-side, max. connectable per phase [5] [6]	mm^2 (DIN VDE)	3 × 240	3 × 240	3 × 240	3 × 240
	AWG/MCM (NEC, CEC)	3 × 500 MCM	3 × 500 MCM	3 × 500 MCM	3 × 500 MCM
PE connection, max. connection cross-section at the enclosure with M12 screw [5]	mm^2 (DIN VDE)	4 × 240	4 × 240	4 × 240	4 × 240
	AWG/MCM (NEC, CEC)	4 × 500 MCM	4 × 500 MCM	4 × 500 MCM	4 × 500 MCM
Degree of protection		IP22	IP22	IP22	IP22
Dimensions [7]					
• Width	mm	4220	4220	4220	4220
• Height	mm	2570	2570	2570	2570
• Depth	mm	1275	1275	1275	1275
Circuit version (Page 2/4)	Fig. No.	③	③	③	③
Weight [7]	kg	3700	3700	3700	3700

[1] The data for the rated input current and the power data in hp and kW are approximate values only; these have been calculated for operation with induction motors and for a typical motor power factor cos φ and motor efficiency. The calculation is based on the rated output current. In this case, the kW and hp values lie in a power range, which is obtained by selecting the following values: Motor power factor between 0.85 and 0.88 and a motor efficiency of 96 %. The rated input current also depends on the line power factor, for which a typical value of between 0.94 and 0.96 was assumed.
The hp data are based on the NEC and CEC guidelines for the North American market. The kW values are specified in multiples of 50. Both approximate values need to be adapted to the motor which is actually used.

[2] Without cooling system

[3] The typical current drawn (rms value; cos $\varphi_{typ.}$ = 0.6) of the supply for the converter open-loop/closed-loop control is specified. The separate supplies for the socket outlets/light or switched auxiliary power feeders (options **N35 to N38**) have not been taken into account. Values for the typical current drawn for special configurations (e.g. for dimensioning an upstream UPS) are available on request.
When using options **L48** (make-proof grounding switch at the converter input), **L49** (make-proof grounding switch at the converter output) or **L51** (disconnector at the converter output), it should further be taken into account that for switching operations, additional peak values of up to 10 A can occur for each make-proof grounding switch or disconnector. This corresponds to the starting current of a motor used to operate a switch, which decays from approx. 10 A to approx. 2 A in 200 ms. A switching operation takes a total time of approx. 2 s. All optionally used make-proof grounding switches or disconnectors are controlled via the manually-actuated make-proof grounding switch for the converter DC link (standard) and therefore switch simultaneously!

[4] Additional 20 A precharging current for 25 s.

[5] Data refer to a sub-system; for details about the number of sub-systems to be connected on the line or motor side, see Circuit versions, Page 2/4.

[6] The maximum permissible cable lengths must be observed (see Power cables, Page 9/13).

[7] The specified dimensions and weights include doors and panels, however no options.

© Siemens AG 2012

Technical specifications

SINAMICS GM150 in IGBT version Air cooling, without sine-wave filter		6SL3810-2LP31-8AA0	6SL3810-2LP32-2AA0	6SL3810-2LP32-6AA0	6SL3810-2LP33-0AA0	6SL3810-2LP33-5AA0
Output voltage 4.16 kV						
Type rating	kVA	1300	1600	1900	2200	2500
Shaft output [1]	kW	1000	1300	1550	1800	2100
	hp	1500	1750	2000	2500	3000
Rated output current	A	180	220	260	300	350
Input voltage	kV	2 × 2.2	2 × 2.2	2 × 2.2	2 × 2.2	2 × 2.2
Rated input current [1]	A	2 × 158	2 × 194	2 × 233	2 × 273	2 × 310
Power loss [2]	kW	20	24	27	31	33
Efficiency [2]	%	98.2	98.3	98.4	98.4	98.5
Typ. current demand of the auxiliary supply 230 V 1 AC, 50/60 Hz [3]	A	2.5	2.5	2.5	2.5	2.5
Max. current demand of the auxiliary supply 400 V 3 AC, 50/60 Hz [4]	A	27	27	27	27	27
Cooling air flow rate	m^3/s	2.4	2.4	2.4	2.4	2.4
Sound pressure level L_{pA} (1 m)	dB	78	78	78	80	80
Measuring surface level L_s (1 m)	dB	18	18	18	18	18
Cable cross-sections, line-side, max. connectable per phase [5] [6]	mm^2 (DIN VDE)	4 × 240	4 × 240	4 × 240	4 × 240	4 × 240
	AWG/MCM (NEC, CEC)	4 × 500 MCM	4 × 500 MCM	4 × 500 MCM	4 × 500 MCM	4 × 500 MCM
Cable cross-sections, motor-side, max. connectable per phase [5] [6]	mm^2 (DIN VDE)	3 × 240	3 × 240	3 × 240	3 × 240	3 × 240
	AWG/MCM (NEC, CEC)	3 × 500 MCM	3 × 500 MCM	3 × 500 MCM	3 × 500 MCM	3 × 500 MCM
PE connection, max. connection cross-section at the enclosure with M12 screw [5]	mm^2 (DIN VDE)	4 × 240	4 × 240	4 × 240	4 × 240	4 × 240
	AWG/MCM (NEC, CEC)	4 × 500 MCM	4 × 500 MCM	4 × 500 MCM	4 × 500 MCM	4 × 500 MCM
Degree of protection		IP22	IP22	IP22	IP22	IP22
Dimensions [7]						
• Width	mm	2420	2420	2420	2420	2420
• Height	mm	2570	2570	2570	2570	2570
• Depth	mm	1275	1275	1275	1275	1275
Circuit version (Page 2/4)	Fig. No.	①	①	①	①	①
Weight [7]	kg	1900	1900	1900	1950	1950

[1] The data for the rated input current and the power data in hp and kW are approximate values only; these have been calculated for operation with induction motors and for a typical motor power factor cos φ and motor efficiency. The calculation is based on the rated output current. In this case, the kW and hp values lie in a power range, which is obtained by selecting the following values: Motor power factor between 0.85 and 0.88 and a motor efficiency of 96 %. The rated input current also depends on the line power factor, for which a typical value of between 0.94 and 0.96 was assumed.
The hp data are based on the NEC and CEC guidelines for the North American market. The kW values are specified in multiples of 50. Both approximate values need to be adapted to the motor which is actually used.

[2] Without cooling system

[3] The typical current drawn (rms value; cos $\varphi_{typ.}$ = 0.6) of the supply for the converter open-loop/closed-loop control is specified. The separate supplies for the socket outlets/light or switched auxiliary power feeders (options **N35 to N38**) have not been taken into account. Values for the typical current drawn for special configurations (e.g. for dimensioning an upstream UPS) are available on request.
When using options **L48** (make-proof grounding switch at the converter input), **L49** (make-proof grounding switch at the converter output) or **L51** (disconnector at the converter output), it should further be taken into account that for switching operations, additional peak values of up to 10 A can occur for each make-proof grounding switch or disconnector. This corresponds to the starting current of a motor used to operate a switch, which decays from approx. 10 A to approx. 2 A in 200 ms. A switching operation takes a total time of approx. 2 s. All optionally used make-proof grounding switches or disconnectors are controlled via the manually-actuated make-proof grounding switch for the converter DC link (standard) and therefore switch simultaneously!

[4] Additional 20 A precharging current for 25 s.

[5] Data refer to a sub-system; for details about the number of sub-systems to be connected on the line or motor side, see Circuit versions, Page 2/4.

[6] The maximum permissible cable lengths must be observed (see Power cables, Page 9/13).

[7] The specified dimensions and weights include doors and panels, however no options.

© Siemens AG 2012

Technical specifications

SINAMICS GM150 in IGBT version Air cooling, without sine-wave filter		6SL3810-2LP34-0AA0	6SL3810-2LP34-6AA1	6SL3810-2LP35-3AA1	6SL3810-2LP36-0AA0	6SL3810-2LP37-0AA1	6SL3810-2LP38-0AA1
Output voltage 4.16 kV							
Type rating	kVA	2900	3300	3800	4300	5000	5800
Shaft output [1]	kW	2400	2800	3100	3600	4150	4800
	hp	3250	3800	4100	5000	5650	6600
Rated output current	A	400	460	530	600	700	800
Input voltage	kV	2 × 2.2	2 × 2.2	2 × 2.2	2 × 2.2	2 × 2.2	2 × 2.2
Rated input current [1]	A	2 × 359	2 × 397	2 × 465	2 × 533	2 × 600	2 × 700
Power loss [2]	kW	38	38	42	56	51	56
Efficiency [2]	%	98.5	98.7	98.7	98.5	98.8	98.8
Typ. current demand of the auxiliary supply 230 V 1 AC, 50/60 Hz [3]	A	2.5	2.5	2.5	2.5	2.5	2.5
Max. current demand of the auxiliary supply 400 V 3 AC, 50/60 Hz [4]	A	27	27	27	27	27	27
Cooling air flow rate	m^3/s	2.4	2.4	2.4	2.4	2.4	2.4
Sound pressure level L_{pA} (1 m)	dB	80	80	80	80	80	80
Measuring surface level L_s (1 m)	dB	18	18	18	18	18	18
Cable cross-sections, line-side, max. connectable per phase [5] [6]	mm^2 (DIN VDE)	4 × 240	4 × 240	4 × 240	4 × 240	4 × 240	4 × 240
	AWG/MCM (NEC, CEC)	4 × 500 MCM	4 × 500 MCM	4 × 500 MCM	4 × 500 MCM	4 × 500 MCM	4 × 500 MCM
Cable cross-sections, motor-side, max. connectable per phase [5] [6]	mm^2 (DIN VDE)	3 × 240	3 × 240	3 × 240	3 × 240	3 × 240	3 × 240
	AWG/MCM (NEC, CEC)	3 × 500 MCM	3 × 500 MCM	3 × 500 MCM	3 × 500 MCM	3 × 500 MCM	3 × 500 MCM
PE connection, max. connection cross-section at the enclosure with M12 screw [5]	mm^2 (DIN VDE)	4 × 240	4 × 240	4 × 240	4 × 240	4 × 240	4 × 240
	AWG/MCM (NEC, CEC)	4 × 500 MCM	4 × 500 MCM	4 × 500 MCM	4 × 500 MCM	4 × 500 MCM	4 × 500 MCM
Degree of protection		IP22	IP22	IP22	IP22	IP22	IP22
Dimensions [7]							
• Width	mm	2420	2420	2420	2420	2420	2420
• Height	mm	2570	2570	2570	2570	2570	2570
• Depth	mm	1275	1275	1275	1275	1275	1275
Circuit version (Page 2/4)	Fig. No.	①	①	①	①	①	①
Weight [7]	kg	1950	2000	2000	2000	2000	2000

[1] The data for the rated input current and the power data in hp and kW are approximate values only; these have been calculated for operation with induction motors and for a typical motor power factor cos φ and motor efficiency. The calculation is based on the rated output current. In this case, the kW and hp values lie in a power range, which is obtained by selecting the following values: Motor power factor between 0.85 and 0.88 and a motor efficiency of 96 %. The rated input current also depends on the line power factor, for which a typical value of between 0.94 and 0.96 was assumed.
The hp data are based on the NEC and CEC guidelines for the North American market. The kW values are specified in multiples of 50. Both approximate values need to be adapted to the motor which is actually used.

[2] Without cooling system

[3] The typical current drawn (rms value; cos $\varphi_{typ.}$ = 0.6) of the supply for the converter open-loop/closed-loop control is specified. The separate supplies for the socket outlets/light or switched auxiliary power feeders (options **N35 to N38**) have not been taken into account. Values for the typical current drawn for special configurations (e.g. for dimensioning an upstream UPS) are available on request.
When using options **L48** (make-proof grounding switch at the converter input), **L49** (make-proof grounding switch at the converter output) or **L51** (disconnector at the converter output), it should further be taken into account that for switching operations, additional peak values of up to 10 A can occur for each make-proof grounding switch or disconnector. This corresponds to the starting current of a motor used to operate a switch, which decays from approx. 10 A to approx. 2 A in 200 ms. A switching operation takes a total time of approx. 2 s. All optionally used make-proof grounding switches or disconnectors are controlled via the manually-actuated make-proof grounding switch for the converter DC link (standard) and therefore switch simultaneously!

[4] Additional 20 A precharging current for 25 s.

[5] Data refer to a sub-system; for details about the number of sub-systems to be connected on the line or motor side, see Circuit versions, Page 2/4.

[6] The maximum permissible cable lengths must be observed (see Power cables, Page 9/13).

[7] The specified dimensions and weights include doors and panels, however no options.

© Siemens AG 2012

Technical specifications

SINAMICS GM150 in IGBT version Air cooling, without sine-wave filter		6SL3810-2LP38-8AA1	6SL3810-2LP41-1AA0	6SL3810-2LP41-2AA1	6SL3810-2LP41-4AA1
Output voltage 4.16 kV					
Type rating	kVA	6700	7900	9000	10100
Shaft output [1]	kW	5650	6600	7600	8500
	hp	7600	9000	10250	11500
Rated output current	A	2 × 465	2 × 550	2 × 625	2 × 700
Input voltage	kV	2 × (2 × 2.2)	2 × (2 × 2.2)	2 × (2 × 2.2)	2 × (2 × 2.2)
Rated input current [1]	A	2 × (2 × 410)	2 × (2 × 490)	2 × (2 × 543)	2 × (2 × 608)
Power loss [2]	kW	77	103	93	106
Efficiency [2]	%	98.7	98.5	98.8	98.8
Typ. current demand of the auxiliary supply 230 V 1 AC, 50/60 Hz [3]	A	4	4	4	4
Max. current demand of the auxiliary supply 400 V 3 AC, 50/60 Hz [4]	A	54	54	54	54
Cooling air flow rate	m^3/s	4.7	4.7	4.7	4.7
Sound pressure level L_{pA} (1 m)	dB	85	85	85	85
Measuring surface level L_s (1 m)	dB	19	19	19	19
Cable cross-sections, line-side, max. connectable per phase [5] [6]	mm^2 (DIN VDE)	4 × 240	4 × 240	4 × 240	4 × 240
	AWG/MCM (NEC, CEC)	4 × 500 MCM	4 × 500 MCM	4 × 500 MCM	4 × 500 MCM
Cable cross-sections, motor-side, max. connectable per phase [5] [6]	mm^2 (DIN VDE)	3 × 240	3 × 240	3 × 240	3 × 240
	AWG/MCM (NEC, CEC)	3 × 500 MCM	3 × 500 MCM	3 × 500 MCM	3 × 500 MCM
PE connection, max. connection cross-section at the enclosure with M12 screw [5]	mm^2 (DIN VDE)	4 × 240	4 × 240	4 × 240	4 × 240
	AWG/MCM (NEC, CEC)	4 × 500 MCM	4 × 500 MCM	4 × 500 MCM	4 × 500 MCM
Degree of protection		IP22	IP22	IP22	IP22
Dimensions [7]					
• Width	mm	4220	4220	4220	4220
• Height	mm	2570	2570	2570	2570
• Depth	mm	1275	1275	1275	1275
Circuit version (Page 2/4)	Fig. No.	③	③	③	③
Weight [7]	kg	3700	3700	3700	3700

1) The data for the rated input current and the power data in hp and kW are approximate values only; these have been calculated for operation with induction motors and for a typical motor power factor cos φ and motor efficiency. The calculation is based on the rated output current. In this case, the kW and hp values lie in a power range, which is obtained by selecting the following values: Motor power factor between 0.85 and 0.88 and a motor efficiency of 96 %. The rated input current also depends on the line power factor, for which a typical value of between 0.94 and 0.96 was assumed.
The hp data are based on the NEC and CEC guidelines for the North American market. The kW values are specified in multiples of 50. Both approximate values need to be adapted to the motor which is actually used.

2) Without cooling system

3) The typical current drawn (rms value; cos $\varphi_{typ.}$ = 0.6) of the supply for the converter open-loop/closed-loop control is specified. The separate supplies for the socket outlets/light or switched auxiliary power feeders (options **N35 to N38**) have not been taken into account. Values for the typical current drawn for special configurations (e.g. for dimensioning an upstream UPS) are available on request.

When using options **L48** (make-proof grounding switch at the converter input), **L49** (make-proof grounding switch at the converter output) or **L51** (disconnector at the converter output), it should further be taken into account that for switching operations, additional peak values of up to 10 A can occur for each make-proof grounding switch or disconnector. This corresponds to the starting current of a motor used to operate a switch, which decays from approx. 10 A to approx. 2 A in 200 ms. A switching operation takes a total time of approx. 2 s. All optionally used make-proof grounding switches or disconnectors are controlled via the manually-actuated make-proof grounding switch for the converter DC link (standard) and therefore switch simultaneously!

4) Additional 20 A precharging current for 25 s.

5) Data refer to a sub-system; for details about the number of sub-systems to be connected on the line or motor side, see Circuit versions, Page 2/4.

6) The maximum permissible cable lengths must be observed (see Power cables, Page 9/13).

7) The specified dimensions and weights include doors and panels, however no options.

© Siemens AG 2012

Technical specifications

SINAMICS GM150 in IGBT version Air cooling, with sine-wave filter (option Y15)		6SL3810-2LM32-5AA0	6SL3810-2LM33-0AA0	6SL3810-2LM33-5AA0	6SL3810-2LM34-0AA0
Output voltage 2.3 kV					
Type rating	kVA	850	1000	1150	1300
Shaft output [1]	kW	700	800	950	1100
	hp	900	1000	1250	1500
Rated output current	A	210	250	290	330
Input voltage	kV	2 × 1.2	2 × 1.2	2 × 1.2	2 × 1.2
Rated input current [1]	A	2 × 182	2 × 221	2 × 257	2 × 293
Power loss [2]	kW	18	22	24	26
Efficiency [2]	%	97.5	97.5	97.5	97.5
Typ. current demand of the auxiliary supply 230 V 1 AC, 50/60 Hz [3]	A	2.5	2.5	2.5	2.5
Max. current demand of the auxiliary supply 400 V 3 AC, 50/60 Hz [4]	A	33	33	33	33
Cooling air flow rate	m^3/s	2.2	2.2	2.2	2.2
Sound pressure level L_{pA} (1 m)	dB	78	81	81	81
Measuring surface level L_s (1 m)	dB	18	18	18	18
Cable cross-sections, line-side, max. connectable per phase [5] [6]	mm^2 (DIN VDE)	4 × 240	4 × 240	4 × 240	4 × 240
	AWG/MCM (NEC, CEC)	4 × 500 MCM	4 × 500 MCM	4 × 500 MCM	4 × 500 MCM
Cable cross-sections, motor-side, max. connectable per phase [5] [6]	mm^2 (DIN VDE)	3 × 240	3 × 240	3 × 240	3 × 240
	AWG/MCM (NEC, CEC)	3 × 500 MCM	3 × 500 MCM	3 × 500 MCM	3 × 500 MCM
PE connection, max. connection cross-section at the enclosure with M12 screw [5]	mm^2 (DIN VDE)	4 × 240	4 × 240	4 × 240	4 × 240
	AWG/MCM (NEC, CEC)	4 × 500 MCM	4 × 500 MCM	4 × 500 MCM	4 × 500 MCM
Degree of protection		IP22	IP22	IP22	IP22
Dimensions [7]					
• Width	mm	3340	3340	3340	3340
• Height	mm	2570	2570	2570	2570
• Depth	mm	1275	1275	1275	1275
Circuit version (Page 2/5)	Fig. No.	④	④	④	④
Weight [7]	kg	2800	2800	2800	2850

1) The data for the rated input current and the power data in hp and kW are approximate values only; these have been calculated for operation with induction motors and for a typical motor power factor cos φ and motor efficiency. The calculation is based on the rated output current. In this case, the kW and hp values lie in a power range, which is obtained by selecting the following values: Motor power factor between 0.85 and 0.88 and a motor efficiency of 96 %. The rated input current also depends on the line power factor, for which a typical value of between 0.94 and 0.96 was assumed.
The hp data are based on the NEC and CEC guidelines for the North American market. The kW values are specified in multiples of 50. Both approximate values need to be adapted to the motor which is actually used.

2) Without cooling system

3) The typical current drawn (rms value; cos $\varphi_{typ.}$ = 0.6) of the supply for the converter open-loop/closed-loop control is specified. The separate supplies for the socket outlets/light or switched auxiliary power feeders (options **N35 to N38**) have not been taken into account. Values for the typical current drawn for special configurations (e.g. for dimensioning an upstream UPS) are available on request.
When using options **L48** (make-proof grounding switch at the converter input), **L49** (make-proof grounding switch at the converter output) or **L51** (disconnector at the converter output), it should further be taken into account that for switching operations, additional peak values of up to 10 A can occur for each make-proof grounding switch or disconnector. This corresponds to the starting current of a motor used to operate a switch, which decays from approx. 10 A to approx. 2 A in 200 ms. A switching operation takes a total time of approx. 2 s. All optionally used make-proof grounding switches or disconnectors are controlled via the manually-actuated make-proof grounding switch for the converter DC link (standard) and therefore switch simultaneously!

4) Additional 20 A precharging current for 25 s.

5) Data refer to a sub-system; for details about the number of sub-systems to be connected on the line or motor side, see Circuit versions, Page 2/5.

6) The maximum permissible cable lengths must be observed (see Power cables, Page 9/13).

7) The specified dimensions and weights include doors, panels and sine-wave filter (option **Y15**), however no additional options.

© Siemens AG 2012

Technical specifications

SINAMICS GM150 in IGBT version Air cooling, with sine-wave filter (option Y15)		6SL3810-2LM34-6AA1	6SL3810-2LM35-3AA1	6SL3810-2LM36-0AA0
Output voltage 2.3 kV				
Type rating	kVA	1450	1650	2000
Shaft output [1]	kW	1200	1350	1650
	hp	1600	1850	2250
Rated output current	A	390	420	500
Input voltage	kV	2 × 1.2	2 × 1.2	2 × 1.2
Rated input current [1]	A	2 × 337	2 × 365	2 × 444
Power loss [2]	kW	28	31	36
Efficiency [2]	%	97.9	98.1	98.0
Typ. current demand of the auxiliary supply 230 V 1 AC, 50/60 Hz [3]	A	2.5	2.5	2.5
Max. current demand of the auxiliary supply 400 V 3 AC, 50/60 Hz [4]	A	33	33	33
Cooling air flow rate	m^3/s	2.2	2.2	2.2
Sound pressure level L_{pA} (1 m)	dB	81	81	81
Measuring surface level L_s (1 m)	dB	18	18	18
Cable cross-sections, line-side, max. connectable per phase [5] [6]	mm^2 (DIN VDE)	4 × 240	4 × 240	4 × 240
	AWG/MCM (NEC, CEC)	4 × 500 MCM	4 × 500 MCM	4 × 500 MCM
Cable cross-sections, motor-side, max. connectable per phase [5] [6]	mm^2 (DIN VDE)	3 × 240	3 × 240	3 × 240
	AWG/MCM (NEC, CEC)	3 × 500 MCM	3 × 500 MCM	3 × 500 MCM
PE connection, max. connection cross-section at the enclosure with M12 screw [5]	mm^2 (DIN VDE)	4 × 240	4 × 240	4 × 240
	AWG/MCM (NEC, CEC)	4 × 500 MCM	4 × 500 MCM	4 × 500 MCM
Degree of protection		IP22	IP22	IP22
Dimensions [7]				
• Width	mm	3340	3340	3340
• Height	mm	2570	2570	2570
• Depth	mm	1275	1275	1275
Circuit version (Page 2/5)	Fig. No.	④	④	④
Weight [7]	kg	2900	2950	2950

1) The data for the rated input current and the power data in hp and kW are approximate values only; these have been calculated for operation with induction motors and for a typical motor power factor cos φ and motor efficiency. The calculation is based on the rated output current. In this case, the kW and hp values lie in a power range, which is obtained by selecting the following values: Motor power factor between 0.85 and 0.88 and a motor efficiency of 96 %. The rated input current also depends on the line power factor, for which a typical value of between 0.94 and 0.96 was assumed.
The hp data are based on the NEC and CEC guidelines for the North American market. The kW values are specified in multiples of 50. Both approximate values need to be adapted to the motor which is actually used.

2) Without cooling system

3) The typical current drawn (rms value; cos $\varphi_{typ.}$ = 0.6) of the supply for the converter open-loop/closed-loop control is specified. The separate supplies for the socket outlets/light or switched auxiliary power feeders (options **N35 to N38**) have not been taken into account. Values for the typical current drawn for special configurations (e.g. for dimensioning an upstream UPS) are available on request.
When using options **L48** (make-proof grounding switch at the converter input), **L49** (make-proof grounding switch at the converter output) or **L51** (disconnector at the converter output), it should further be taken into account that for switching operations, additional peak values of up to 10 A can occur for each make-proof grounding switch or disconnector. This corresponds to the starting current of a motor used to operate a switch, which decays from approx. 10 A to approx. 2 A in 200 ms. A switching operation takes a total time of approx. 2 s. All optionally used make-proof grounding switches or disconnectors are controlled via the manually-actuated make-proof grounding switch for the converter DC link (standard) and therefore switch simultaneously!

4) Additional 20 A precharging current for 25 s.

5) Data refer to a sub-system; for details about the number of sub-systems to be connected on the line or motor side, see Circuit versions, Page 2/5.

6) The maximum permissible cable lengths must be observed (see Power cables, Page 9/13).

7) The specified dimensions and weights include doors, panels and sine-wave filter (option **Y15**), however no additional options.

© Siemens AG 2012

Technical specifications

SINAMICS GM150 in IGBT version Air cooling, with sine-wave filter (option Y15)		6SL3810-2LN31-8AA0	6SL3810-2LN32-2AA0	6SL3810-2LN32-6AA0	6SL3810-2LN33-0AA0	6SL3810-2LN33-5AA0	6SL3810-2LN34-0AA0
Output voltage 3.3 kV							
Type rating	kVA	850	1100	1250	1450	1700	1950
Shaft output [1]	kW	700	900	1050	1200	1400	1600
	hp	900	1150	1250	1500	1750	2000
Rated output current	A	150	190	220	250	300	340
Input voltage	kV	2 × 1.7	2 × 1.7	2 × 1.7	2 × 1.7	2 × 1.7	2 × 1.7
Rated input current [1]	A	2 × 130	2 × 171	2 × 197	2 × 223	2 × 261	2 × 304
Power loss [2]	kW	19	22	24	28	31	35
Efficiency [2]	%	97.4	97.6	97.9	97.8	97.9	98.0
Typ. current demand of the auxiliary supply 230 V 1 AC, 50/60 Hz [3]	A	2.5	2.5	2.5	2.5	2.5	2.5
Max. current demand of the auxiliary supply 400 V 3 AC, 50/60 Hz [4]	A	33	33	33	33	33	33
Cooling air flow rate	m^3/s	3	3	3	3	3	3
Sound pressure level L_{pA} (1 m)	dB	79	79	79	81	81	81
Measuring surface level L_s (1 m)	dB	18	18	18	18	18	18
Cable cross-sections, line-side, max. connectable per phase [5] [6]	mm^2 (DIN VDE)	4 × 240	4 × 240	4 × 240	4 × 240	4 × 240	4 × 240
	AWG/MCM (NEC, CEC)	4 × 500 MCM	4 × 500 MCM	4 × 500 MCM	4 × 500 MCM	4 × 500 MCM	4 × 500 MCM
Cable cross-sections, motor-side, max. connectable per phase [5] [6]	mm^2 (DIN VDE)	3 × 240	3 × 240	3 × 240	3 × 240	3 × 240	3 × 240
	AWG/MCM (NEC, CEC)	3 × 500 MCM	3 × 500 MCM	3 × 500 MCM	3 × 500 MCM	3 × 500 MCM	3 × 500 MCM
PE connection, max. connection cross-section at the enclosure with M12 screw [5]	mm^2 (DIN VDE)	4 × 240	4 × 240	4 × 240	4 × 240	4 × 240	4 × 240
	AWG/MCM (NEC, CEC)	4 × 500 MCM	4 × 500 MCM	4 × 500 MCM	4 × 500 MCM	4 × 500 MCM	4 × 500 MCM
Degree of protection		IP22	IP22	IP22	IP22	IP22	IP22
Dimensions [7]							
• Width	mm	3340	3340	3340	3340	3340	3640
• Height	mm	2570	2570	2570	2570	2570	2570
• Depth	mm	1275	1275	1275	1275	1275	1275
Circuit version (Page 2/5)	Fig. No.	④	④	④	④	④	④
Weight [7]	kg	3050	3050	3100	3100	3100	3300

[1] The data for the rated input current and the power data in hp and kW are approximate values only; these have been calculated for operation with induction motors and for a typical motor power factor cos φ and motor efficiency. The calculation is based on the rated output current. In this case, the kW and hp values lie in a power range, which is obtained by selecting the following values: Motor power factor between 0.85 and 0.88 and a motor efficiency of 96 %. The rated input current also depends on the line power factor, for which a typical value of between 0.94 and 0.96 was assumed.
The hp data are based on the NEC and CEC guidelines for the North American market. The kW values are specified in multiples of 50. Both approximate values need to be adapted to the motor which is actually used.

[2] Without cooling system

[3] The typical current drawn (rms value; cos $\varphi_{typ.}$ = 0.6) of the supply for the converter open-loop/closed-loop control is specified. The separate supplies for the socket outlets/light or switched auxiliary power feeders (options **N35 to N38**) have not been taken into account. Values for the typical current drawn for special configurations (e.g. for dimensioning an upstream UPS) are available on request.
When using options **L48** (make-proof grounding switch at the converter input), **L49** (make-proof grounding switch at the converter output) or **L51** (disconnector at the converter output), it should further be taken into account that for switching operations, additional peak values of up to 10 A can occur for each make-proof grounding switch or disconnector. This corresponds to the starting current of a motor used to operate a switch, which decays from approx. 10 A to approx. 2 A in 200 ms. A switching operation takes a total time of approx. 2 s. All optionally used make-proof grounding switches or disconnectors are controlled via the manually-actuated make-proof grounding switch for the converter DC link (standard) and therefore switch simultaneously!

[4] Additional 20 A precharging current for 25 s.

[5] Data refer to a sub-system; for details about the number of sub-systems to be connected on the line or motor side, see Circuit versions, Page 2/5.

[6] The maximum permissible cable lengths must be observed (see Power cables, Page 9/13).

[7] The specified dimensions and weights include doors, panels and sine-wave filter (option **Y15**), however no additional options.

модуль, igbt, мост диодный Минск +375447584780

www.fotorele.net www.tiristor.by радиодетали, электронные компоненты

email minsk17@tut.by tel.+375 29 758 47 80 мтс

Мы не работаем с частными (физическими) лицами.

Мы работаем только с юридическими лицами(организациями) и ИП и только по безналичному расчёту.

каталог, описание, технические, характеристики, datasheet, параметры, маркировка,габариты, фото

КАТАЛОГ МИНСК

модуль, igbt, модуль диодный

купить, продажа