модуль, igbt, мост диодный Минск +375447584780

www.fotorele.net www.tiristor.by радиодетали, электронные компоненты

email minsk17@tut.by tel.+375 29 758 47 80 мтс

Мы не работаем с частными (физическими) лицами.

Мы работаем только с юридическими лицами(организациями) и ИП и только по безналичному расчёту.

каталог, описание, технические, характеристики, datasheet, параметры, маркировка,габариты, фото

КАТАЛОГ МИНСК

модуль, igbt, модуль диодный

купить, продажа

High Power Modules 1- & 2-Pack

		I_C	1200V	1700V		3300V	
			V-Series 6th Generation With Cu-baseplate Soft turn-off	V-Series 6th Generation With Cu-baseplate Low switching loss	V-Series 6th Generation With AlSiC-baseplate Low switching loss	U-Series 5th Generation With AlSiC-baseplate Soft turn-off	U-Series 5th Generation With AlSiC-baseplate Low switching loss
2-Pack	46 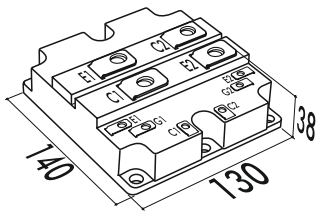 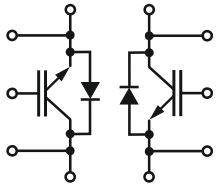	600A	2MBi 600VG-120P	2MBi 600VG-170E	2MBi 600VT-170E		
		800A	2MBi 800VG-120P	2MBi 800VG-170E	2MBi 800VT-170E		
		1200A	2MBi 1200VG-120P	2MBi 1200VG-170E	2MBi 1200VT-170E		
1-Pack	47 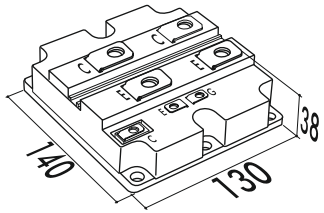 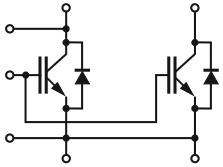	800A				1MBi 800UG-330	
		1000A				1MBi 1000UG-330	1MBi 1000UG-330B
		1200A	1MBi 1200VC-120P	1MBi 1200VC-170E	1MBi 1200VR-170E		
		1600A	1MBi 1600VC-120P	1MBi 1600VC-170E	1MBi 1600VR-170E		
		2400A	1MBi 2400VC-120P	1MBi 2400VC-170E	1MBi 2400VR-170E		
	48 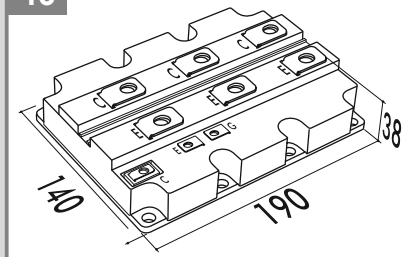 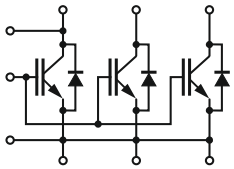	1200A				1MBi 1200UE-330	
		1500A				1MBi 1500UE-330	1MBi 1500UE-330B
		2400A	1MBi 2400VD-120P	1MBi 2400VD-170E	1MBi 2400VS-170E		
		3600A	1MBi 3600VD-120P	1MBi 3600VD-170E	1MBi 3600VS-170E		

High Power Modules, 2-Pack & Chopper

		I_C	1200V V-Series 6th Generation E-type (Low switching loss) P-type (Soft turn-off)	1200V X-Series 7th Generation E-type (Low switching loss) P-type (Soft turn-off)	1700V V-Series 6th Generation E-type (Low switching loss) P-type (Soft turn-off)	1700V X-Series 7th Generation E-type (Low switching loss) P-type (Soft turn-off)
2-Pack	49	600A	2MBi 600VXA-120E-50			
		650A			2MBi 650VXA-170E-50 2MBi 650VXA-170EA-50 *(With larger free wheeling diode)*	2MBi 650XXA-170E-50*
		900A	2MBi 900VXA-120E-50 2MBi 900VXA-120P-50	2MBi 900XXA-120E-50* 2MBi 900XXA-120P-50*		
		1200A		2MBi 1200XXE-120E-50* 2MBi 1200XXE-120P-50*		2MBi 1200XXE-170P-50*
Chopper		650A			1MBi 650VXA-170EL-50	
		900A	1MBi 900VXA-120PD-50			
		650A			1MBi 650VXA-170EH-50	
		900A	1MBi 900VXA-120PC-50			
2-Pack	50	1000A			2MBi 1000VXB-170E-50 2MBi 1000VXB-170EA-50 *(With larger free wheeling diode)*	2MBi 1000XXB-170E-50*
		1400A	2MBi 1400VXB-120E-50 2MBi 1400VXB-120P-50	2MBi 1400XXB-120P-50*	2MBi 1400VXB-170E-50 2MBi 1400VXB-170P-50	2MBi 1400XXB-170P-50*
		1800A		2MBi 1800XXF-120P-50*		2MBi 1800XXF-170P-50*
Chopper		1000A			1MBi 1000VXB-170EL-50	
		1400A	1MBi 1400VXB-120PL-50		1MBi 1400VXB-170EL-50	
		1000A			1MBi 1000VXB-170EH-50	
		1400A	1MBi 1400VXB-120PH-50		1MBi 1400VXB-170EH-50	

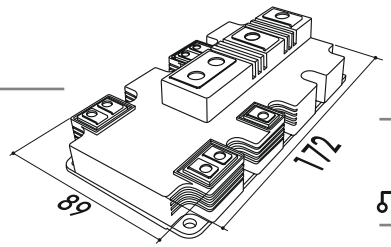

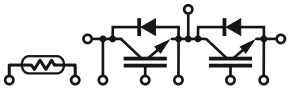

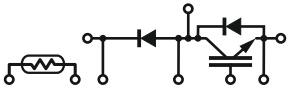

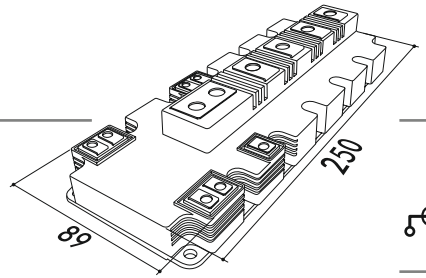

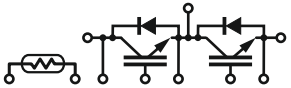

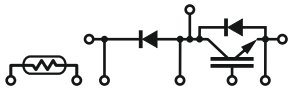

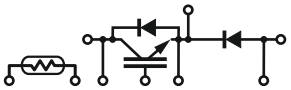

Above devices are available with $V_{CE,sat}$ & V_F rank label for optimum paralleling (→suffix -54 instead of -50)

*) Under development

IPM IGBTs (Intelligent Power Modules)

Built-in protection functions

- Fault status output (Alarm)
- Under voltage protection (self shutdown)
- Short circuit protection (self shutdown)
- Overheating protection (self shutdown)
- Temperature sensor function ($V_{temp,out}$)

51 With High Voltage Driver-IC

Without Brake-Chopper

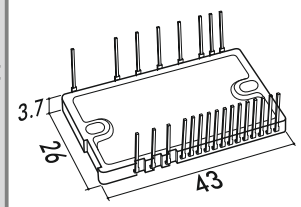

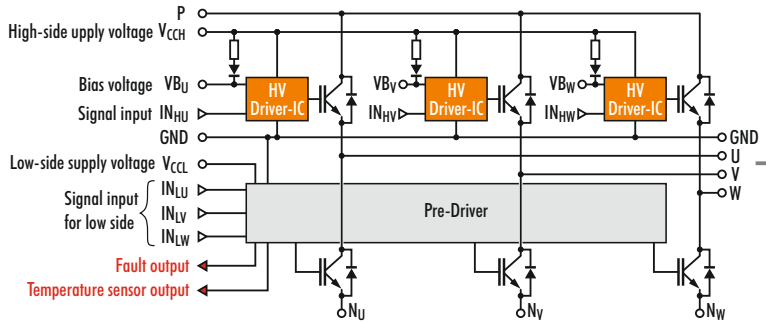

I_C	600V V-Series 6th Generation	600V X-Series 7th Generation	1200V V-Series 6th Generation
15A		6MBP 15XSD-060-50	
20A		6MBP 20XSD-060-50	
30A		6MBP 30XSD-060-50	
35A		6MBP 35XSD-060-50	
15A		6MBP 15XSF-060-50	
20A		6MBP 20XSF-060-50	
30A		6MBP 30XSF-060-50	
35A		6MBP 35XSF-060-50	

52 I_c- & T_j-Sensors on chip

Without Brake-Chopper

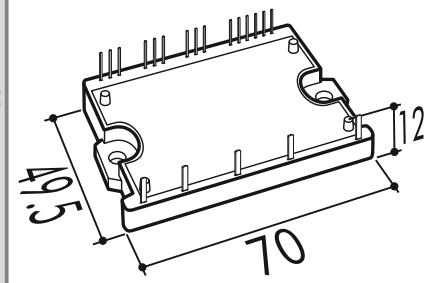

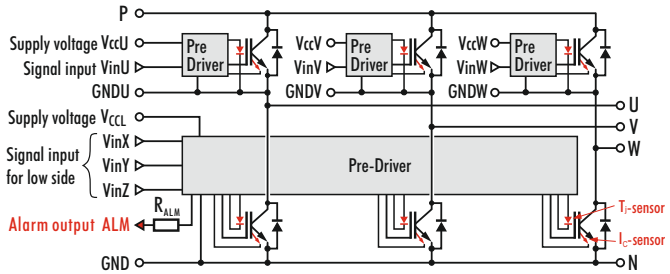

I_C	600V V-Series 6th Generation	600V X-Series 7th Generation	1200V V-Series 6th Generation
10A			6MBP 10VAA-120-50
15A			6MBP 15VAA-120-50
20A	6MBP 20VAA-060-50		
25A			6MBP 25VAA-120-50
30A	6MBP 30VAA-060-50		
50A	6MBP 50VAA-060-50		

53 I_c- & T_j-Sensors on chip

Without Brake-Chopper

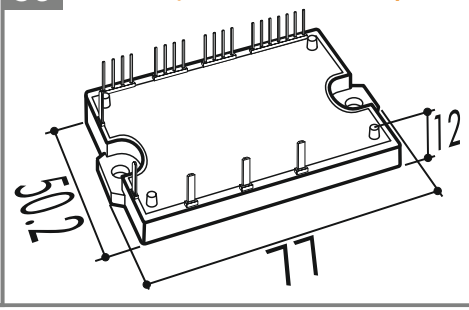

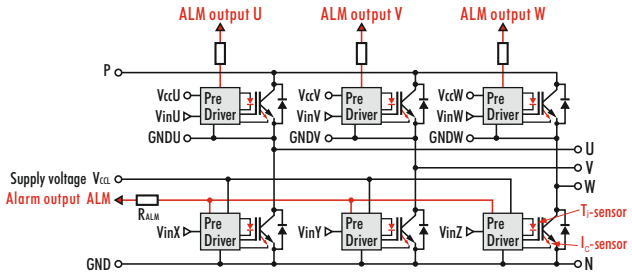

I_C	600V V-Series 6th Generation	600V X-Series 7th Generation	1200V V-Series 6th Generation
25A			6MBP 25VBA-120-50
35A			6MBP 35VBA-120-50
50A	6MBP 50VBA-060-50		6MBP 50VBA-120-50
75A	6MBP 75VBA-060-50		

IPM IGBTs (Intelligent Power Modules)

54 I_c- & T_j-Sensors on chip

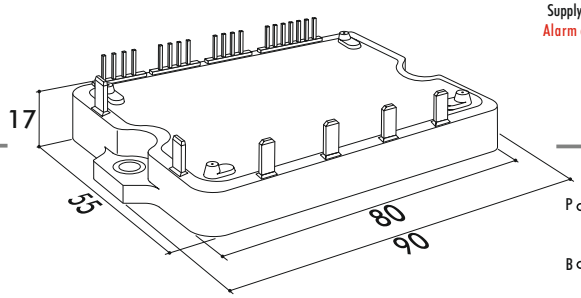

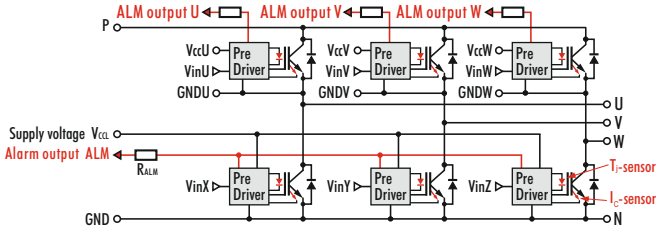

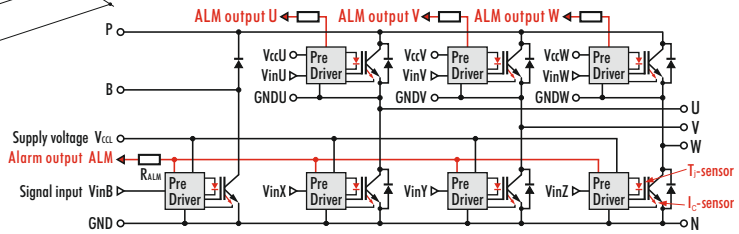

Built-in protection functions

	Fault status output (Alarm)	Under voltage protection (self shutdown)	Short circuit protection (self shutdown)	Overheating protection (self shutdown)	Temperature sensor function ($V_{temp,out}$)	I_C	600V V-Series 6th Generation	1200V V-Series 6th Generation
Without Brake-Chopper	–	●	●	●	●	25A		6MBP 25VFN-120-50
						35A		6MBP 35VFN-120-50
						50A	6MBP 50VFN-060-50	6MBP 50VFN-120-50
						75A	6MBP 75VFN-060-50	
						100A	6MBP 100VFN-060-50	
With Brake-Chopper	–	●	●	●	●	25A		7MBP 25VFN-120-50
						35A		7MBP 35VFN-120-50
						50A	7MBP 50VFN-060-50	7MBP 50VFN-120-50
						75A	7MBP 75VFN-060-50	
						100A	7MBP 100VFN-060-50	

IPM IGBTs (Intelligent Power Modules)

Built-in protection functions
- Fault status output (Alarm)
- Under voltage protection (self shutdown)
- Short circuit protection (self shutdown)
- Overheating protection (self shutdown)
- Temperature sensor function ($V_{temp,out}$)

55 I_c- & T_j-Sensors on chip

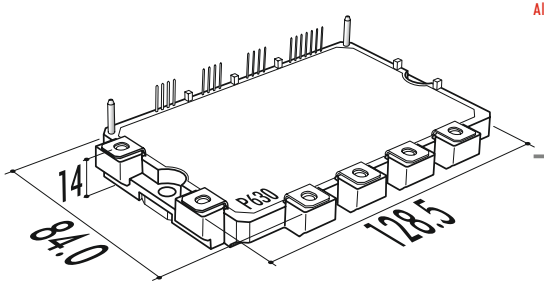

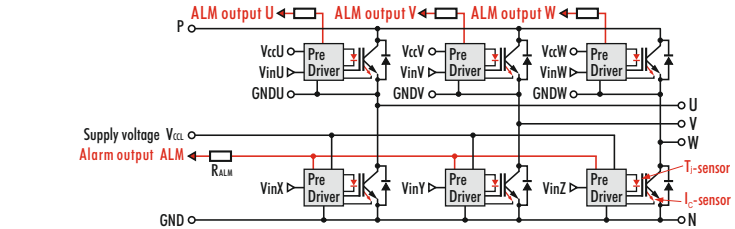

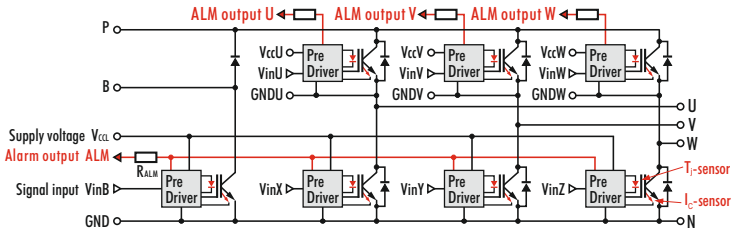

	I_c	600V V-Series 6th Generation	1200V V-Series 6th Generation
Without Brake-Chopper	25A		6MBP 25VDA-120-50
	35A		6MBP 35VDA-120-50
	50A	6MBP 50VDA-060-50	6MBP 50VDA-120-50 6MBP 50VDN-120-50[1)]
	75A	6MBP 75VDA-060-50	6MBP 75VDA-120-50 6MBP 75VDN-120-50[1)]
	100A	6MBP 100VDA-060-50 6MBP 100VDN-060-50[1)]	6MBP 100VDA-120-50 6MBP 100VDN-120-50[1)]
	150A	6MBP 150VDA-060-50 6MBP 150VDN-060-50[1)]	
	200A	6MBP 200VDA-060-50 6MBP 200VDN-060-50[1)]	
With Brake-Chopper	25A		7MBP 25VDA-120-50
	35A		7MBP 35VDA-120-50
	50A	7MBP 50VDA-060-50	7MBP 50VDA-120-50 7MBP 50VDN-120-50[1)]
	75A	7MBP 75VDA-060-50	7MBP 75VDA-120-50 7MBP 75VDN-120-50[1)]
	100A	7MBP 100VDA-060-50 7MBP 100VDN-060-50[1)]	7MBP 100VDA-120-50 7MBP 100VDN-120-50[1)]
	150A	7MBP 150VDA-060-50 7MBP 150VDN-060-50[1)]	
	200A	7MBP 200VDA-060-50 7MBP 200VDN-060-50[1)]	

56 I_c- & T_j-Sensors on chip

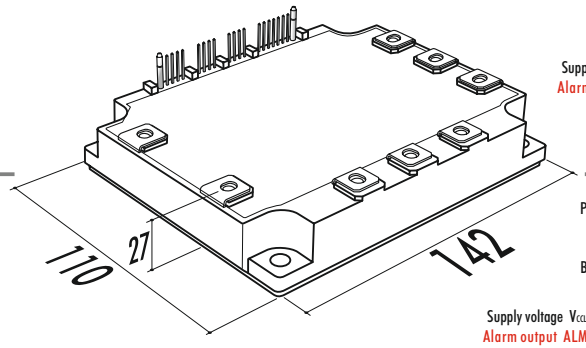

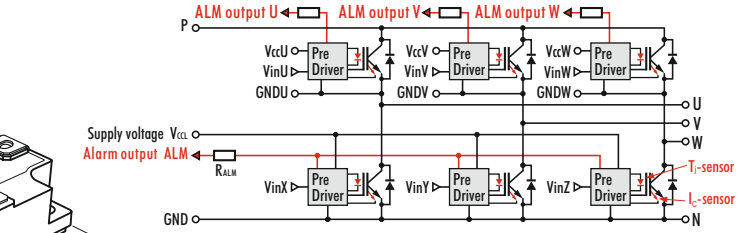

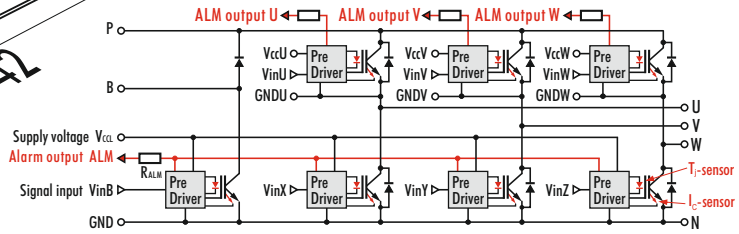

	I_c	600V V-Series 6th Generation	1200V V-Series 6th Generation
Without Brake-Chopper	100A		6MBP 100VEA-120-50
	150A		6MBP 150VEA-120-50
	200A	6MBP 200VEA-060-50	6MBP 200VEA-120-50
	300A	6MBP 300VEA-060-50	
	400A	6MBP 400VEA-060-50	
With Brake-Chopper	100A		7MBP 100VEA-120-50
	150A		7MBP 150VEA-120-50
	200A	7MBP 200VEA-060-50	7MBP 200VEA-120-50
	300A	7MBP 300VEA-060-50	
	400A	7MBP 400VEA-060-50	

1) With high thermal performance

Chopper (Standard and high speed IGBTs)

		I_C	1200V Planar-NPT High Speed-Series	1200V U-Series 5th Generation	1200V V-Series 6th Generation
Chopper	57 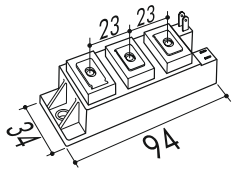 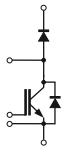	50A		1MBi 50U4F-120L-50	
		75A		1MBi 75U4F-120L-50	
		100A		1MBi 100U4F-120L-50	
		150A			1MBi 150VA-120L-50
		200A			1MBi 200VA-120L-50
	58 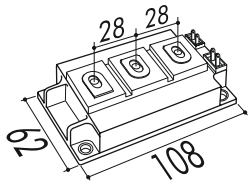 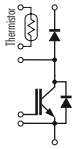	200A	1MBi 200HH-120L-50	1MBi 200U4H-120L-50 Without thermistor	
		300A	1MBi 300HH-120L-50		
		400A	1MBi 400HH-120L-50		

High Speed IGBTs

		I_C	1200V Planar-NPT High Speed-Series
2-Pack	59 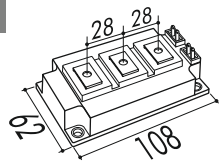 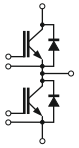	100A	2MBi 100HJ-120-50
		150A	2MBi 150HJ-120-50
		200A	2MBi 200HJ-120-50
		300A	2MBi 300HJ-120-50

Discrete IGBTs

TO-247 — 60

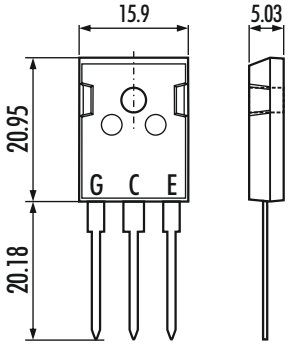

Without free wheeling diode

With free wheeling diode

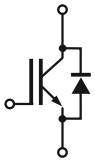

I_C	V-Series, 6th Generation Low loss ,~10kHz 600V	V-Series, 6th Generation Low loss ,~10kHz 1200V	V-Series, 6th Generation High speed , 10~30kHz 600V	V-Series, 6th Generation High speed , 10~30kHz 1200V	W-Series, 6th Generation Ultra high speed , 20~100kHz 650V	W-Series, 6th Generation Ultra high speed , 20~100kHz 1200V
Without free wheeling diode						
15A				FGW 15N 120H		
25A						FGW 25N 120W
30A				FGW 30N 120H		
35A			FGW 35N 60H			
40A				FGW 40N 120H	FGW 40N 65W *	FGW 40N 120W
50A			FGW 50N 60H		FGW 50N 65W *	
60A					FGW 60N 65W *	
75A			FGW 75N 60H			
With free wheeling diode						
15A		FGW 15N 120VD		FGW 15N 120HD		
25A		FGW 25N 120VD				FGW 25N 120WD FGW 25N 120WE [1)]*
30A	FGW 30N 60VD			FGW 30N 120HD	FGW 30N 65WD *	
35A			FGW 35N 60HD FGW 35N 60HC [1)]			
40A		FGW 40N 120VD		FGW 40N 120HD	FGW 40N 65WD * FGW 40N 65WE [1)]*	FGW 40N 120WD FGW 40N 120WE [1)]*
50A	FGW 50N 60VD		FGW 50N 60HD FGW 50N 60HC [1)]		FGW 50N 65WD * FGW 50N 65WE [1)]*	
60A					FGW 60N 65WD * FGW 60N 65WE [1)]*	
75A			FGW 75N 60HD FGW 75N 60HC [1)]		FGW 75N 65WE [1)]*	

*) Under development
1) With full rating free wheeling diode

Reverse Blocking IGBT

TO-247 — 61

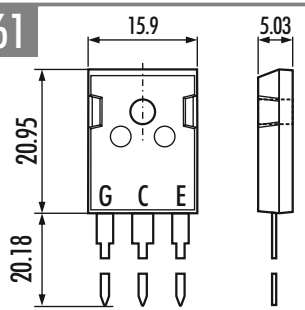

I_C	600V
85A	FGW 85N 60RB

Super-Junction MOSFET

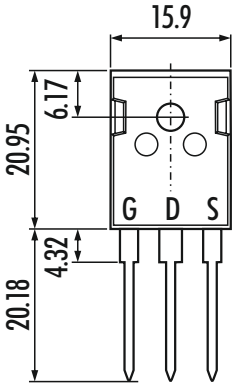

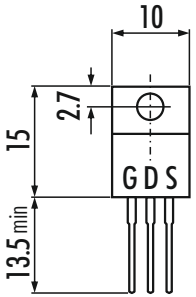

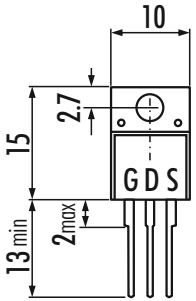

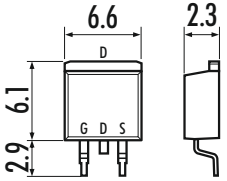

V_{DS}	$R_{DS(on),max}$	I_D	TO-247	TO-220	TO-220F	TO-252
600V	25.4 mΩ	95.5 A	FMW 60N 025S2			
	40.0 mΩ	66.2 A	FMW 60N 040S2			
	55.0 mΩ	50.3 A	FMW 60N 055S2			
	70.0 mΩ	39.4 A	FMW 60N 070S2		FMV 60N 070S2	
	79.0 mΩ	37.1 A	FMW 60N 079S2	FMP 60N 079S2	FMV 60N 079S2	
	88.0 mΩ	32.8 A	FMW 60N 088S2	FMP 60N 088S2	FMV 60N 088S2	
	99.0 mΩ	29.2 A	FMW 60N 099S2	FMP 60N 099S2	FMV 60N 099S2	
	125.0 mΩ	23.4 A	FMW 60N 125S2	FMP 60N 125S2	FMV 60N 125S2	
	160.0 mΩ	18.4 A	FMW 60N 160S2	FMP 60N 160S2	FMV 60N 160S2	
	190.0 mΩ	15.5 A	FMW 60N 190S2	FMP 60N 190S2	FMV 60N 190S2	
	280.0 mΩ	10.7 A		FMP 60N 280S2	FMV 60N 280S2	FMD 60N 280S2
	380.0 mΩ	8.1 A		FMP 60N 380S2	FMV 60N 380S2	FMD 60N 380S2
650V	28.7 mΩ	89.8 A	FMW 65N 029S2*			
	45.0 mΩ	62.4 A	FMW 65N 045S2*			
	79.0 mΩ	37.1 A	FMW 65N 079S2*		FMV 65N 079S2*	
	101.0 mΩ	30.6 A	FMW 65N 101S2*	FMP 65N 101S2*	FMV 65N 101S2*	
600V (With built-in FRED)	27.0 mΩ	95.5 A	FMW 60N 027S2 FD			
	43.0 mΩ	66.2 A	FMW 60N 043S2 FD			
	59.0 mΩ	50.3 A	FMW 60N 059S2 FD			
	75.0 mΩ	39.4 A	FMW 60N 075S2 FD		FMV 60N 075S2 FD	
	84.0 mΩ	37.1 A	FMW 60N 084S2 FD	FMP 60N 084S2 FD	FMV 60N 084S2 FD	
	94.0 mΩ	32.8 A	FMW 60N 094S2 FD	FMP 60N 094S2 FD	FMV 60N 094S2 FD	
	105.0 mΩ	29.2 A	FMW 60N 105S2 FD	FMP 60N 105S2 FD	FMV 60N 105S2 FD	
	133.0 mΩ	23.4 A	FMW 60N 133S2 FD	FMP 60N 133S2 FD	FMV 60N 133S2 FD	
	170.0 mΩ	18.4 A	FMW 60N 170S2 FD	FMP 60N 170S2 FD	FMV 60N 170S2 FD	

*) Under development

SiC Schottky Barrier Diodes

		TO-220		TO-220F (insulated)		TO-247		T-Pack S	
		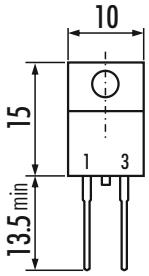	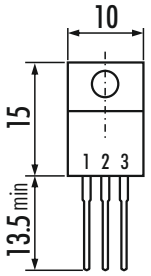	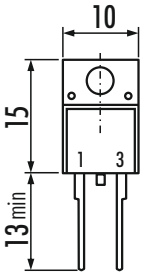	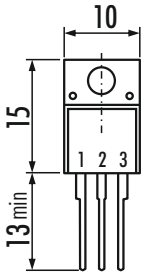	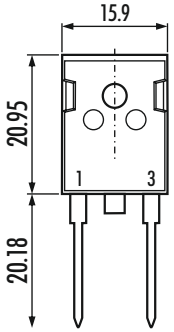	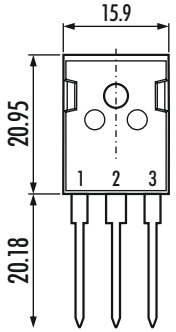	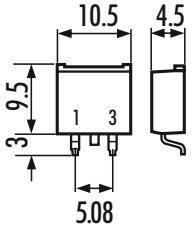	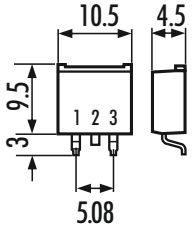
		Single	Dual	Single	Dual	Single	Dual	Single	Dual
	I_{FAV}		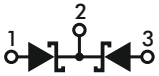		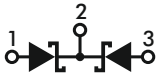		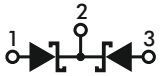		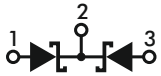
650V	10A	FDCP 10S 65		FDCA 10S 65		FDCY 10S 65		FDCC 10S 65	
	20A		FDCP 20C 65		FDCA 20C 65		FDCY 20C 65		FDCC 20C 65
	25A	FDCP 25S 65		FDCA 25S 65		FDCY 25S 65		FDCC 25S 65	
	50A						FDCY 50C 65		
1200V	18A			FDCA 18S 120		FDCY 18S 120			
	36A						FDCY 36C 120		

Single IGBT-Drivers

	Type name	I_{peak}	$V_{iso,max}$	f_{max}
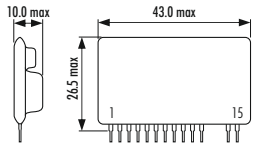 Single power supply needed with $V_{DC} = +20$ V	1200V VLA 517-01R	4A	2.5kV	40kHz
	1700V			
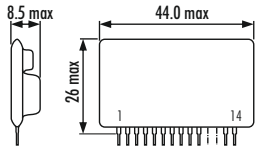 Built-in power supply with short circuit protection	1200V VLA 542-01R	5A	2.5kV	20kHz
Built-in power supply with short circuit protection and adjustable fall-time	1700V VLA 546-01R	5A	4.0kV	20kHz
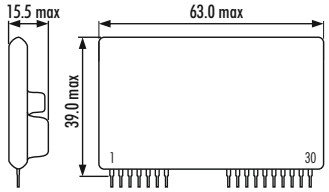 Built-in power supply with short circuit protection	1200V VLA 551-01R	5A	2.5kV	20kHz
	1700V VLA 551K-01R	5A	4.0kV	20kHz
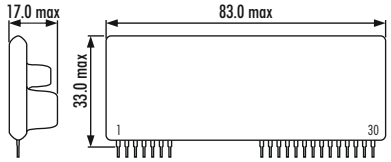 Built-in power supply with short circuit protection and adjustable fall-time	1200V VLA 500-01R	12A	2.5kV	20kHz
	1200V VLA 502-01R	12A	2.5kV	60kHz
	1700V VLA 500K-01R	12A	4.0kV	20kHz
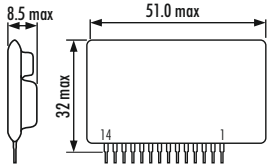 Built-in power supply with short circuit protection and adjustable fall-time	1200V			
	1700V VLA 574-01R	15A	4.0kV	20kHz
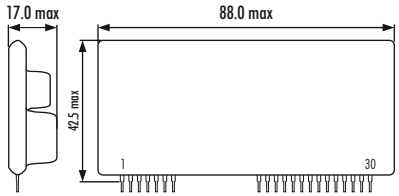 Built-in power supply with short circuit protection and adjustable fall-time	1200V			
	1700V VLA 552-01R	24A	4.0kV	10kHz

Dual IGBT-Drivers

	Type name	I_{peak}	$V_{iso,max}$	f_{max}
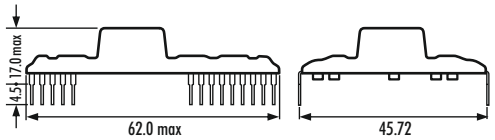 Built-in power supply & Short circuit protection with adjustable fall-time and UVLO	1200V VLA 567-01R	8A	2.5kV	20kHz
	1700V			
Built-in power supply & Short circuit protection	1200V VLA 536-01R	5A	2.5kV	20kHz
	1700V			
Built-in power supply & Short circuit protection	1200V VLA 559-01R	24A	4.0kV	5kHz
	1700V VLA 559-02R	24A	4.0kV	5kHz

4 channel DC/DC converter for gate power supply

Package	Type name	$V_{iso,max}$	Applications
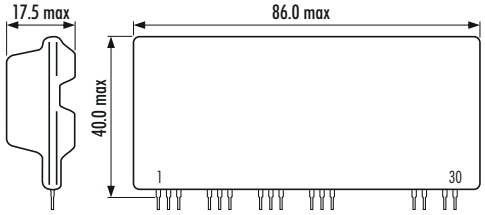	VLA 130-24205QR	2.5kV	Inverter up to 30kW Gate power supply for 3-Level IGBTs

For further plug & play IGBT-drivers please refer to the following suppliers:

power integrations
www.igbt-driver.com

AgileSwitch
www.agileswitch.com

ANVILEX
www.anvilex.de

MITSUBISHI ELECTRIC

Changes for the Better

POWER MODULES

for a greener tomorrow

Power Modules

Innovative Power Devices for a Sustainable Future

Mitsubishi Electric power modules are at the forefront of the latest energy innovations that seek to solve global environmental issues while creating a more affluent and comfortable society for all. Some of these innovations are photovoltaic (PV) and wind power generation from renewable energy sources, smart grids realizing efficient supply of power, hybrid/electric vehicles (HVs/EVs) that take the next step in reducing carbon emissions and fuel consumption, and home appliances that achieve ground-breaking energy savings. Whether in appliances, railcars, EVs or industrial systems, our power modules are key elements in changing the way energy is used.

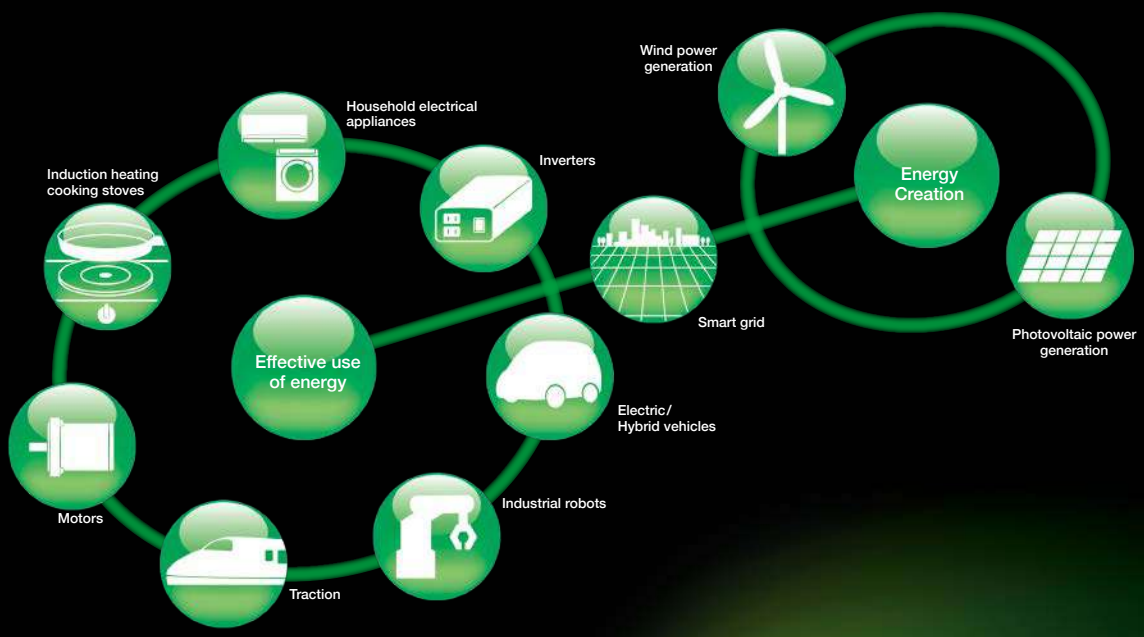

Focus Technology

7th-Generation 1,200V-Class IGBT Chip Technology

Cutting-edge technology realizes energy-saving inverter devices

- Latest thin-wafer processing (n-drift layer) achieves thinner wafer than 6th-generation devices
- Performance improved by combining CSTBT™* and light punch-through (LPT) structures
- Inverter system power dissipation minimized by its superior performance(lower VCE_{sat} and Eoff)

*CSTBT: Mitsubishi Electric's unique IGBT that makes use of carrier cumulative effect

1200V-class IGBT structure

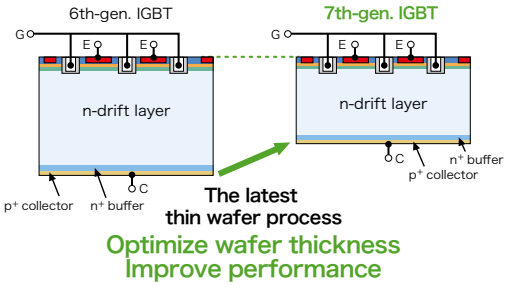

Comparison of power loss

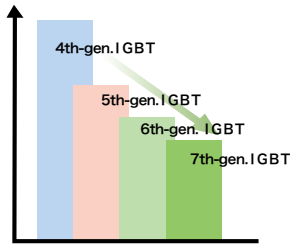

Modules realizing single-control power supply and photocoupler-less systems for household appliances and low-capacity inverters

Key Features

- Transfer-molded structure with insulation sheet having high heat conductivity simultaneously provides heat dissipation and insulation
- High-voltage IC equipped with drive, protection and level-shift circuits for direct control via input signals from a CPU or microcomputer
- Compact board and highly reliable equipment realized through single power-supply and photocoupler-less systems
- Includes built-in bootstrap diode (BSD)

DIPIPM™
Dual-In-Line Package Intelligent Power Modules

Modules with built-in control and protection circuits for AC servo robots and PV power generation

Key Features

- Built-in protection circuit for short-circuiting, power supply undervoltage and overheating
- Highly compatible package with simplified printed circuit board (PCB) design
- Special intelligent power modules (IPMs) for power conditioners in PV power generation systems

IPM
Intelligent Power Modules

IGBT modules for general-purpose inverters used in various applications

Key Features

- Various low-inductance packages and power chips available
- Compatible with high-frequency, high-voltage (1,700V) applications
- Large-capacity modules available for renewable energy systems

IGBT Modules
Insulated Gate Bipolar Transistor Modules

Modules meeting the high voltage, current and insulation requirements of inverters for traction

Key Features

- High isolation package (10.2kVrms: AC60Hz 1min) matched to high catenary voltage
- Lightweight modules with aluminum silicon carbide (AlSiC) baseplate available
- Range of HV diode modules enabling highly efficient comprehensive converter design

HVIGBT Modules
High-Voltage Insulated Gate Bipolar Transistor Modules

Modules realizing high performance and reliability as motor drives in HVs/EVs

Key Features

- Built-in temperature analog output function realizing highly reliable motor drive
- High-power/temperature cycle life ensures high reliability
- Compliant with the End-of-life Vehicles Directive, regulations relating to substances of environmental concern
- High traceability in managing materials/components throughout the entire production process for each product

Power Modules for Vehicles
Power Modules for EV/PHEV

*HV: Hybrid Vehicle *EV: Electric Vehicle *PHEV: Plug-in Hybrid Electric Vehicle

Feature Products

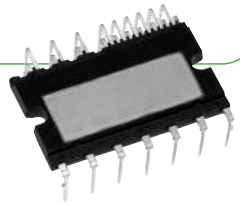

Smaller package size realized by integrating newly designed RC-IGBT Recommended for low-cost inverter and fan controller applications

SLIMDIP™ SLIMDIP-S, SLIMDIP-L

<Main Features>
- RC-IGBT*1 incorporated, reducing package size 30% compared to Super-mini DIPIPM
- Maximum case temperature increased from 100°C to 115°C, raising operating temperature range and leading to easier system design
- Additional terminals for floating supply and built-in bootstrap diodes simplify PCB wiring pattern
- Both VOT*2 and OT*3 functions integrated for temperature protection

*1 RC-IGBT: Reverse conducting IGBT
*2 VOT: Temperature information output function
*3 OT: Over-temperature protection function

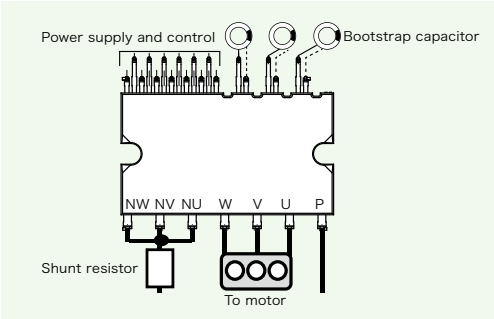

Feature Products

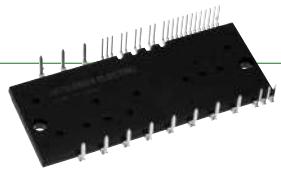

All-in-one intelligent power modules equipped with 3-phase converter and brake circuit in addition to inverter circuit

DIPIPM+™ PSS05MC1FT, PSS10MC1FT, PSS15MC1FT, PSS25MC1FT, PSS35MC1FT, PSS50MC1F6

<Main Features>
- Encapsulated by transfer molded resin, integrates three-phase converter, inverter, brake and control IC
- Built-in converter and brake enable system size to be reduced and save design cost, contributing to total cost reduction
- Lower PCB inductance pattern reduces noise, thereby reducing design time and countermeasure parts required for noise reduction
- Built-in BSD*1 with 1,200V withstand voltage reduces number of external parts and improves reliability

*1 BSD: Bootstrap diode
*2: Lineup of circuit configuration products without brake component.

Internal circuit diagram

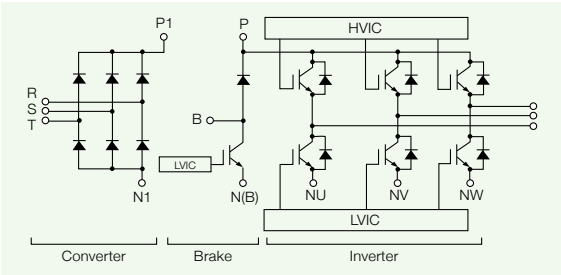

Feature Products

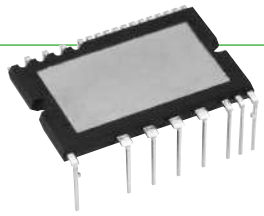

Contributing to reducing annual Power consumption of high-end air conditioners by incorporating SJ-MOSFET

SJ-MOSFET Super-mini DIPIPM™ PSM15S94H6, PSM20S94H6

<Main Features>
- SJ-MOSFET realizes approx. 80% smaller ON voltage during low- current operation compared to IGBT. It contributes to improving efficiency of air conditioner during steady-state operation especially
- Built-in IGBT function secures sufficient current capability during high-load operation
- Current rating lineup expanded to support 2.2-8.0kW class air conditioners
- External size, pin assignment, etc. secure compatibility with our Super-mini package*2 products
- Built-in BSD*3 for power supply to drive the P-side reduces number of external peripheral parts required

*1 Compared to Super-mini DIPIPM Ver.6 PSS15S92F6 (15A/600V)
*2 Super-mini package such as Super-mini DIPIPM Ver.6 Series, etc.
*3 BSD : Bootstrap diode
*4 Please refer to SiC power device catalogue in case you need further high-efficiency products.

Output characteristics (Typical)

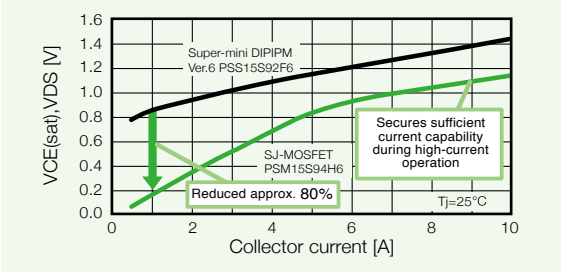

Line-up of DIPIPM™

Series Matrix of 600V / 500V DIPIPM™

V_{CES} (V)		600V						500V
Series / I_C (A)		SLIMDIP	Super mini	Mini	Large	CIB/CI	Super mini	
			Ver.6		Ver.4	DIPIPM+	MOSFET	
3		SLIMDIP-S★ SLIMDIP-L★						PSM03S93E5-A
5			PSS05S92F6-AG PSS05S92E6-AG	PSS05S51F6 PSS05S51F6-C				PSM05S93E5-A
10			PSS10S92F6-AG PSS10S92E6-AG	PSS10S51F6 PSS10S51F6-C				
15			PSS15S92F6-AG PSS15S92E6-AG	PSS15S51F6 PSS15S51F6-C			PSM15S94H6-A★	
20			PSS20S92F6-AG PSS20S92E6-AG	PSS20S51F6 PSS20S51F6-C PSS20S71F6			PSM20S94H6-A★	
30			PSS30S92F6-AG PSS30S92E6-AG	PSS30S71F6				
35			PSS35S92F6-AG PSS35S92E6-AG					
50				PSS50S71F6	PS21A79	PSS50MC1F6★ PSS50NC1F6*7★		
75					PS21A7A			
Chip	IGBT/MOSFET	RC-IGBT	CSTBT	CSTBT	CSTBT	CSTBT	SJ-MOSFET	MOSFET
	HVIC	×1	×1	×3	×3	×1	×1	×1
	LVIC	×1	×1	×1	×1	×2 *8	×1	×1
	BSD	×3	×3	×3	–	×3	×3	×3
Protective Function	UV	P-side/N-side	P-side/N-side	P-side/N-side	P-side/N-side	P-side/N-side/Brake part	P-side/N-side	P-side/N-side
	SC	N-side	N-side	N-side	N-side with sense	N-side	N-side	N-side
	OT	N-side	N-side*1	–	–	–	–	N-side
	V_{OT}*2	N-side	N-side*1	N-side	N-side	N-side	N-side	–
Specifications	Active input	High(3/5V)	High(3/5V)	High(3/5V)	High(3/5V)	High(5V)	High(3/5V)	High(3/5V)
	Emitter pin of N-side	Open	Open	Open	Open	Open	Open	Open
	Fault output	N-side(UV,SC,OT)	N-side (UV,SC,OT)	N-side (UV,SC)	N-side (UV,SC)	N-side (UV,SC)	N-side (UV,SC)	N-side (UV,SC,OT)
	Insulation voltage	2000Vrms	1500Vrms*3	2500Vrms	2500Vrms	2500Vrms	1500Vrms*3	1500Vrms*3
	Insulation structure	Insulation sheet	Insulation sheet	Molding resin*6/Insulation sheet	Insulation sheet	Insulation sheet	Insulation sheet	Insulation sheet
	RoHS directive	Compliant *5	Compliant *5	Compliant *4,*5	Compliant *5	Compliant *5	Compliant *5	Compliant *5
	Pin type	Control side of zigzag	Long	C: Control side of zigzag None: Short	–	–	Long	Long

★: New Product

[Notes] *1: PSSxxS92E6 has OT function, PSSxxS92F6 has V_{OT} function
*2: Analog temperature output
*3: AC60Hz,1minute.Corresponds to isolation voltage 2500Vrms in the case the convex-shaped heat sink
*4: High melting point solder (Lead Over 85%) is used for chip soldering of PSSxxS51F6 only
*5: Pin plating and chip soldering : Lead-free solder
*6: Molding resin insulation for PSSxxS51F6/-C
*7: PSS50NC1F6 doesn't integrate brake part
*8: LVIC 1pcs in case of PSS50NC1F6

[Term] CSTBT™: Mitsubishi Electric's unique IGBT that makes use of the carrier cumulative effect
BSD: Bootstrap Diode
HVIC: High Voltage IC
LVIC: Low Voltage IC, BSD: Bootstrap Diode
UV: Supply Under Voltage protection
OT: Over Temperature protection
SC: Short Circuit protection
RoHS: Restriction of the use of certain Hazardous Substances in electrical and electronic equipment
CIB: Converter Inverter Brake, CI: Converter Inverter

Application circuit of built-in BSD super mini DIPIPM™

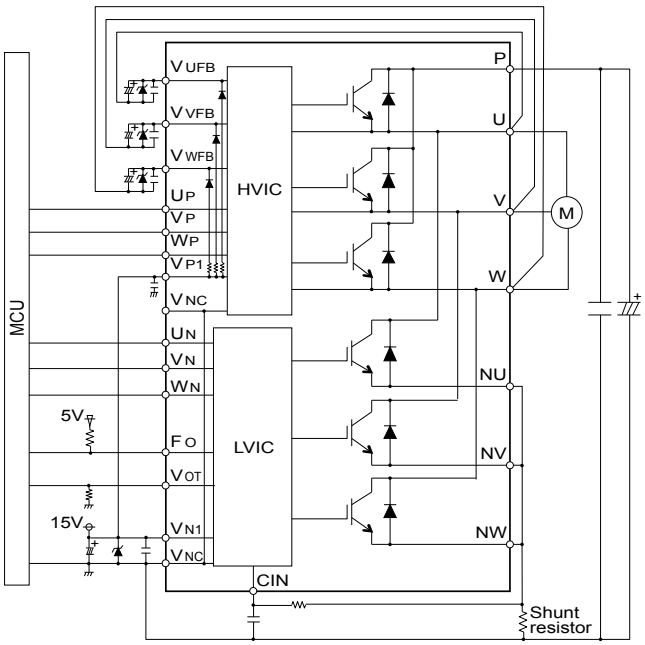

Line-up of DIPIPM™

Series Matrix of 1200V DIPIPM™

V_{CES} (V)		1200V			
Series / I_C (A)		Mini	Large		DIPIPM+
			Ver.6	Ver.4	CIB/CI
5		PSS05S72FT	PSS05SA2FT	PS22A72	PSS05MC1FT★ PSS05NC1FT*3★
10		PSS10S72FT	PSS10SA2FT	PS22A73	PSS10MC1FT★ PSS10NC1FT*3★
15			PSS15SA2FT	PS22A74	PSS15MC1FT★ PSS15NC1FT*3★
25			PSS25SA2FT	PS22A76	PSS25MC1FT★ PSS25NC1FT*3★
35			PSS35SA2FT	PS22A78-E	PSS35MC1FT★ PSS35NC1FT*3★
50			PSS50SA2FT	PS22A79	
Chip	IGBT/MOSFET	CSTBT	CSTBT	CSTBT	CSTBT
	HVIC	×3	×3	×3	×1
	LVIC	×1	×1	×1	×2 *4
	BSD	×3	×3	—	×3
Protective Function	UV	P-side/N-side	P-side/N-side	P-side/N-side	P-side/N-side/Brake
	SC	N-side	N-side	N-side	N-side
	OT	—	—	—	—
	V_{OT}*1	N-side	N-side	N-side	N-side
Specifications	Active input	High(5V)	High(5V)	High(5V)	High(5V)
	Emitter pin of N-side	Open	Open	Open	Open
	Fault output	N-side (UV,SC)	N-side (UV,SC)	N-side (UV,SC)	N-side (UV,SC)
	Insulation voltage	2500Vrms	2500Vrms	2500Vrms	2500Vrms
	Insulation structure	Insulation sheet	Insulation sheet	Insulation sheet	Insulation sheet
	RoHS directive	Compliant *2	Compliant *2	Compliant *2	Compliant *2
	Pin type	—	—	—	—

★: New Product Non-recommended : Please contact to the sales offices.

[Notes] *1: Analog temperature output
*2: Pin plating and chip soldering : Lead-free solder
*3: PSS**NC1FT doesn't included brake.
*4: LVIC 1pcs in case of PSS**NC1FT

[Term] BSD: Bootstrap Diode
CSTBT™: Mitsubishi Electric's unique IGBT that makes use of the carrier cumulative effect.
HVIC: High Voltage IC, LVIC: Low Voltage IC
UV: Supply Under Voltage protection, OT: Over Temperature protection, SC: Short Circuit protection
RoHS: Restriction of hazardous substances in electrical and electronic equipment
CIB: Converter Inverter Brake, CI: Converter Inverter

Type Name Definition of DIPIPM™

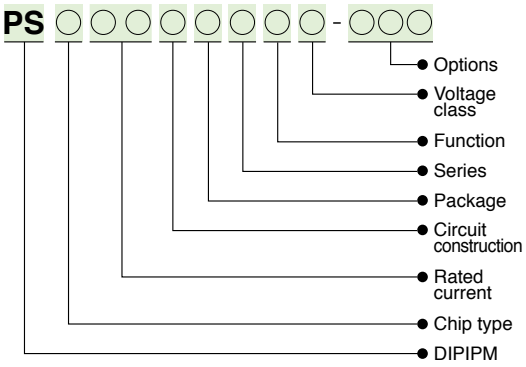

Outline Drawing of DIPIPM™

Unit:mm

Super mini DIPIPM Ver.6
MOSFET Super mini DIPIPM
Super mini DIPIPM Ver.5
Long (A)

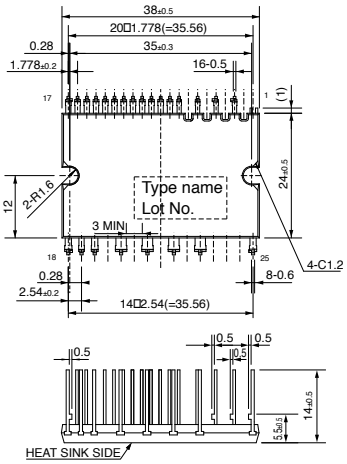

Mini DIPIPM (PSSxxS71F6)
1200V Mini DIPIPM

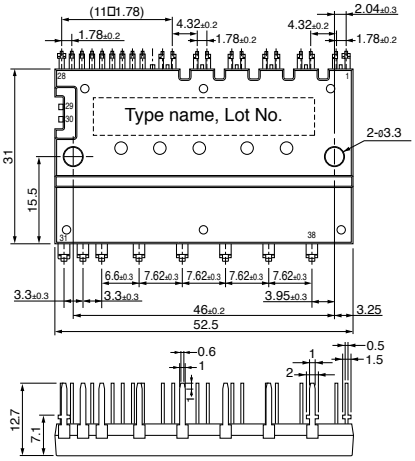

Mini DIPIPM (PSSxxS51F6)

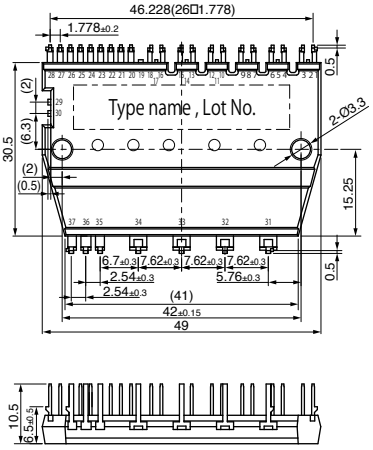

Mini DIPIPM(PSSxxS51F6-C)
Zigzag(C)

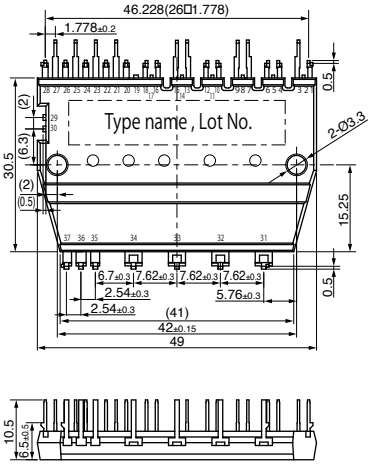

Large DIPIPM

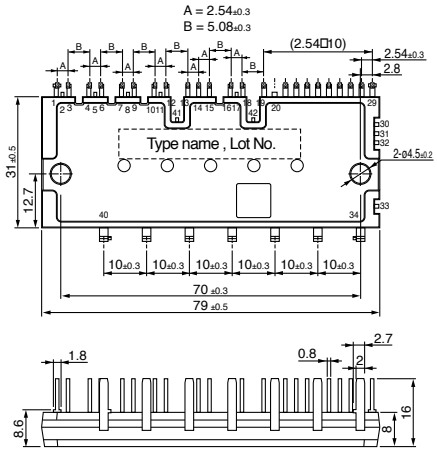

SLIMDIP-S/L

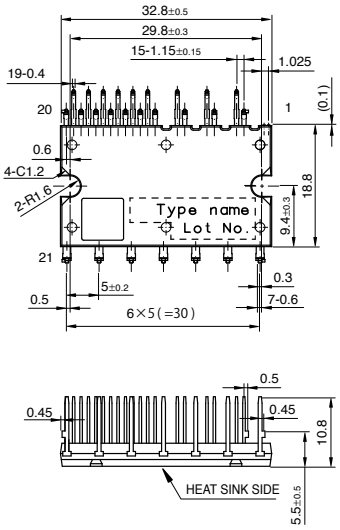

DIPIPM+

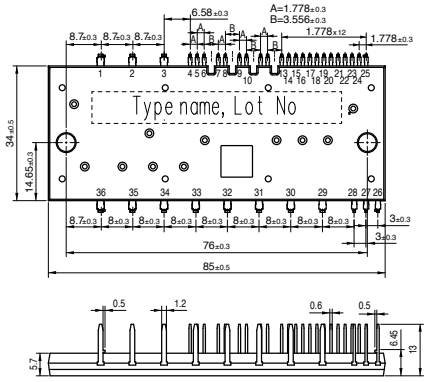

New Products

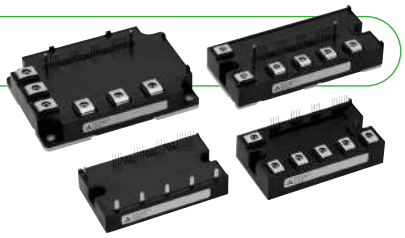

Loaded with built-in functions, contributing to inverters with enhanced energy savings

IPM G1 Series with 7th-generation IGBT

<Main Features>

- Power loss has been reduced with the introduction of the 7th-generation IGBT produced using CSTBT™*1 and a diode incorporating a RFC*2 structure that contributes to reducing the power consumed in inverters.
- The new resin-insulated metal baseplate, the same as that for the 7th-generation IGBT modules introduced, eliminates the solder-attached section, and the thermal cycle lifetime has been increased, which contributes to improving inverter reliability.
- In addition to the built-in functions of the previous product,*3 a low-noise drive, error detection function and bootstrap power source*4 contribute to lowering inverter noise and shortening design time.
- The introduction of press-fit pins and PC-TIM*5 contribute to simplifying the inverter assembly process (optional).

*1 CSTBT™: Mitsubishi Electric's unique IGBT that utilizes the carrier cumulative effect.
*2 RFC: Relaxed field cathode
*3 Conventional product: IPM L1-Series
Built-in functions: Supply Undervoltage lock protection (UV)、Short-circuit protection (SC), Over-temperature protection (OT)
*4 Bootstrap power supply: Optional products include 50A, 75A, 100A/650V, 25A, 50A/1200V
*5 PC-TIM: Phase change-thermal interface material

"A" package main pin shape and layout

For the "A" package 6-in-1 (CG1A) main pin shape, select either solder pin or screw type.
For the pin layout, select either straight or L-shaped.

Main pin shape

Main pin: Solder pin

Main pin: Screw

Main pin layout

Straight

L-shaped

Lineup

V_{CES}(V)	Package	Main pin shape	Main pin layout	Ic(A) 25	50	75	100	150	200	300	450
650V	A package	Screw	Straight		PM50CG1A065★★ PM50RG1A065★★	PM75CG1A065★★ PM75RG1A065★★	PM100CG1A065★★				
			L-shaped		PM50CG1AL065★★	PM75CG1AL065★★	PM100CG1AL065★★				
		Solder pin	Straight		PM50CG1AP065★★ PM50RG1AP065★★	PM75CG1AP065★★ PM75RG1AP065★★	PM100CG1AP065★★				
			L-shaped		PM50CG1APL065★★	PM75CG1APL065★★	PM100CG1APL065★★				
	B package	Screw	L-shaped		PM50CG1B065★★ PM50RG1B065★★	PM75CG1B065★★ PM75RG1B065★★	PM100CG1B065★★ PM100RG1B065★★	PM150CG1B065★★ PM150RG1B065★★	PM200CG1B065★★ PM200RG1B065★★		
	C package	Screw	L-shaped						PM200CG1C065★★ PM200RG1C065★★	PM300CG1C065★★ PM300RG1C065★★	PM450CG1C065★★ PM450RG1C065★★
1200V	A package	Screw	Straight	PM25CG1A120★★ PM25RG1A120★★	PM50CG1A120★★						
			L-shaped	PM25CG1AL120★★	PM50CG1AL120★★						
		Solder pin	Straight	PM25CG1AP120★★ PM25RG1AP120★★	PM50CG1AP120★★						
			L-shaped	PM25CG1APL120★★	PM50CG1APL120★★						
	B package	Screw	L-shaped	PM25CG1B120★★ PM25RG1B120★★	PM50CG1B120★★ PM50RG1B120★★	PM75CG1B120★★ PM75RG1B120★★	PM100CG1B120★★ PM100RG1B120★★				
	C package	Screw	L-shaped				PM100CG1C120★★ PM100RG1C120★★	PM150CG1C120★★ PM150RG1C120★★	PM200CG1C120★★ PM200RG1C120★★		

★★: Under Development

Representative reference is "A" package with screw terminal and straight layout (CG1A).

Matrix of IPM Modules 650V/600V (No.: Number of outline drawing, see page 10 to 11)

V_{CES}(V) / Series / I_C(A)	650V			600V																	
	G1 Series			L1 Series			S1 Series			V1 Series			Photovoltaic			L Series		
		Connection	No.		Connection	No.		Connection	No.		Connection	No.		Connection	No.		Connection	No.
50	PM50CG1A065**	C	12	PM50CL1A060	C	01	PM50CS1D060	C	05				PM50B4LA060	B4	01	PM50CLA060	C	
	PM50RG1A065**	R	12	PM50CL1B060	C	02							PM50B5LA060	B5	01	PM50CLB060	C	
	PM50CG1B065**	C	10	PM50RL1A060	R	01							PM50B6LA060	B6	01	PM50RLA060	R	
	PM50RG1B065**	R	10	PM50RL1B060	R	02							PM50B4LB060	B4	02	PM50RLB060	R	
	PM50CG1AL065**	C	12	PM50RL1C060	R	03							PM50B5LB060	B5	02			
	PM50CG1AP065**	C	09										PM50B6LB060	B6	02			
	PM50CG1APL065**	C	09										PM50B4L1C060	B4	03			
	PM50RG1AP065**	R	09										PM50B5L1C060	B5	03			
													PM50B6L1C060	B6	03			
75	PM75CG1A065**	C	12	PM75CL1A060	C	01	PM75CS1D060	C	05				PM75B4LA060	B4	01	PM75CLA060	C	
	PM75RG1A065**	R	12	PM75CL1B060	C	02							PM75B5LA060	B5	01	PM75CLB060	C	
	PM75CG1B065**	C	10	PM75RL1A060	R	01							PM75B6LA060	B6	01	PM75RLA060	R	
	PM75RG1B065**	R	10	PM75RL1B060	R	02							PM75B4LB060	B4	02	PM75RLB060	R	
	PM75CG1AL065**	C	12										PM75B5LB060	B5	02			
	PM75CG1AP065**	C	09										PM75B6LB060	B6	02			
	PM75CG1APL065**	C	09										PM75B4L1C060	B4	03			
	PM75RG1AP065**	R	09										PM75B5L1C060	B5	03			
													PM75B6L1C060	B6	03			
100	PM100CG1A065**	C	12	PM100CL1A060	C	01	PM100CS1D060	C	05							PM100CLA060	C	
	PM100CG1B065**	C	10	PM100CL1B060	C	02										PM100RLA060	R	
	PM100RG1B065**	R	10	PM100RL1A060	R	01												
	PM100CG1AL065**	C	12	PM100RL1B060	R	02												
	PM100CG1AP065**	C	09															
	PM100CG1APL065**	C	09															
150	PM150CG1B065**	C	10	PM150CL1A060	C	01	PM150CS1D060	C	05							PM150CLA060	C	
	PM150RG1B065**	R	10	PM150CL1B060	C	02										PM150RLA060	R	
				PM150RL1A060	R	01												
				PM150RL1B060	R	02												
200	PM200CG1B065**	C	10	PM200CL1A060	C	04	PM200CS1D060	C	05							PM200CLA060	C	
	PM200RG1B065**	R	10	PM200RL1A060	R	04										PM200RLA060	R	
	PM200CG1C065**	C	11															
	PM200RG1C065**	R	11															
300	PM300CG1C065**	C	11	PM300CL1A060	C	04										PM300CLA060	C	
	PM300RG1C065**	R	11	PM300RL1A060	R	04										PM300RLA060	R	
400/450	PM450CG1C065**	C	11							PM400DV1A060	D	06				PM450CLA060	C	08
	PM450RG1C065**	C	11															
600										PM600DV1A060	D	06				PM600CLA060	C	08
800										PM800DV1B060	D	07						
IGBT chip	CSTBT*1 Emitter sensor installed Temperature sensor installed			CSTBT*1 Built-in emitter sensor Built-in temperature sensor			CSTBT*1 Built-in emitter sensor Built-in temperature sensor			CSTBT*1 Built-in emitter sensor Built-in temperature sensor			CSTBT*1 Built-in emitter sensor Built-in temperature sensor			CSTBT*2 Built-in emitter sensor Built-in temperature sensor		
Fault output UV	P-side/N-side			P-side/N-side			N-side			P-side/N-side			P-side/N-side			P-side/N-side		
Fault output OT	P-side/N-side			P-side/N-side			N-side			P-side/N-side			P-side/N-side			P-side/N-side		
Fault output SC	P-side/N-side			P-side/N-side			N-side			P-side/N-side			P-side/N-side			P-side/N-side		
Identification	P-side/N-side			—			—			—			—			—		
RoHS directive	Compliant			Compliant			Compliant			Compliant			Compliant			Compliant		
Compatibility	—			L Series			S-DASH SERVO			V Series			—			—		

Connection

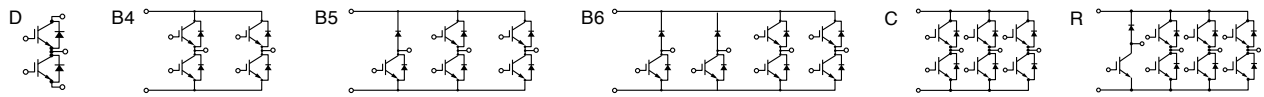

★★: Under Development ★: New Product Non-recommended : Please contact to the sales offices.

[Notes] *1: Full-gate CSTBT™ *2: PCM (Plugged Cell Merged) CSTBT™

[Term] UV: Supply Under Voltage-lock protection, SC: Short-Circuit protection, OT: Over-temperature protection,
OC: Over-current protection, CSTBT™: Mitsubishi Electric's unique IGBT that makes use of the carrier cumulative effect
RoHS: Restriction of hazardous substances in electrical and electronic equipment

Matrix of IPM Modules 1200V (No.: Number of outline drawing, see page 10 to 11)

V_{CES}(V)	1200V														
Series / Ic(A)	G1 Series	Connection	No.	L1 Series	Connection	No.	S1 Series	Connection	No.	V1 Series	Connection	No.	L Series	Connection	No.
25	PM25CG1A120★★ PM25CG1B120★★ PM25RG1A120★★ PM25RG1B120★★ PM25CG1AL120★★ PM25CG1AP120★★ PM25CG1APL120★★ PM25RG1AP120★★	C C R R C C C R	12 10 12 10 12 09 09 09	PM25CL1A120 PM25CL1B120 PM25RL1A120 PM25RL1B120 PM25RL1C120	C C R R R	01 02 01 02 03	PM25CS1D120	C	05				PM25CLA120 PM25CLB120 PM25RLA120 PM25RLB120	C C R R	
50	PM50CG1A120★★ PM50CG1B120★★ PM50RG1B120★★ PM50CG1AL120★★ PM50CG1AP120★★ PM50CG1APL120★★	C C R C C C	12 10 10 12 09 09	PM50CL1A120 PM50CL1B120 PM50RL1A120 PM50RL1B120	C C R R	01 02 01 02	PM50CS1D120	C	05				PM50CLA120 PM50CLB120 PM50RLA120 PM50RLB120	C C R R	
75	PM75CG1B120★★ PM75RG1B120★★	C R	10 10	PM75CL1A120 PM75CL1B120 PM75RL1A120 PM75RL1B120	C C R R	01 02 01 02	PM75CS1D120	C	05				PM75CLA120 PM75CLB120 PM75RLA120 PM75RLB120	C C R R	
100	PM100CG1B120★★ PM100CG1C120★★ PM100RG1B120★★ PM100RG1C120★★	C C R R	10 11 10 11	PM100CL1A120 PM100RL1A120	C R	04 04	PM100CS1D120	C	05				PM100CLA120 PM100RLA120	C R	
150	PM150CG1C120★★ PM150RG1C120★★	C R	11 11	PM150CL1A120 PM150RL1A120	C R	04 04							PM150CLA120 PM150RLA120	C R	
200	PM200CG1C120★★ PM200RG1C120★★	C R	11 11							PM200DV1A120	D	06	PM200CLA120	C	08
300										PM300DV1A120	D	06	PM300CLA120	C	08
450										PM450DV1A120	D	06	PM450CLA120	C	08
IGBT chip	CSTBT*1 Emitter sensor installed Temperature sensor installed			CSTBT*1 Built-in current sensor Built-in temperature sensor			CSTBT*1 Built-in current sensor Built-in temperature sensor			CSTBT*1 Built-in current sensor Built-in temperature sensor			CSTBT*2 Built-in current sensor Built-in temperature sensor		
Fault output UV	P-side/N-side			P-side/N-side			N-side			P-side/N-side			P-side/N-side		
Fault output OT	P-side/N-side			P-side/N-side			N-side			P-side/N-side			P-side/N-side		
Fault output SC	P-side/N-side			P-side/N-side			N-side			P-side/N-side			P-side/N-side		
Identification	P-side/N-side			—			—			—			—		
RoHS directive	Compliant			Compliant			Compliant			Compliant			Compliant		
Compatibility	—			L Series			S-DASH SERVO			V Series			—		
Connection	D C 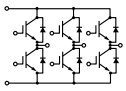 R 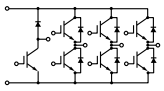														

★★: Under Development ★: New Product Non-recommended : Please contact to the sales offices.

[Notes] *1: Full-gate CSTBT™ *2: PCM (Plugged Cell Merged) CSTBT™

[Term] UV: Supply Under Voltage-lock protection, SC: Short-circuit protection, OT: Over-temperature protection,
OC: Over-current protection, CSTBT™: Carrier stored trench-gate bipolar transistor.
RoHS: Restriction of hazardous substances in electrical and electronic equipment

Outline Drawing of IPM

Unit:mm

01

PM50,75,100,150CL1A/RL1A060
PM25,50,75CL1A/RL1A120
PM50,75B4/B5/B6LA060

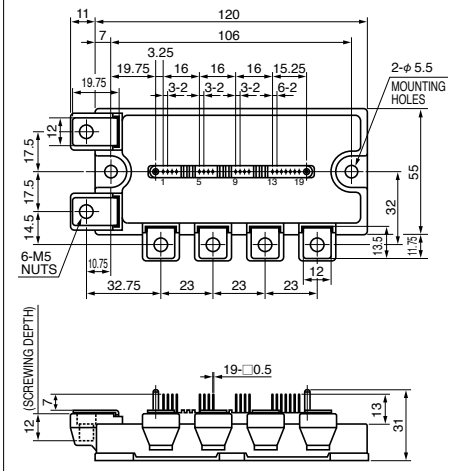

02

PM50,75,100,150CL1B/RL1B060
PM25,50,75CL1B/RL1B120
PM50,75B4/B5/B6LB060

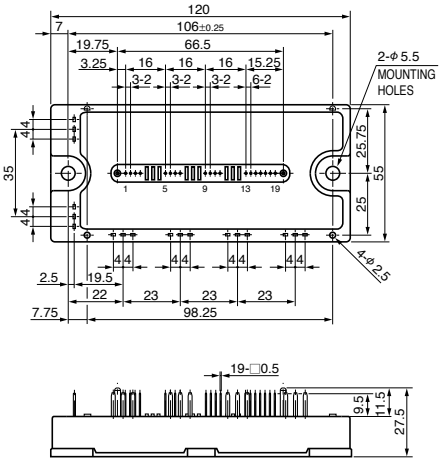

03

PM50RL1C060
PM25RL1C120
PM50,75,B4/B5/B6L1C060

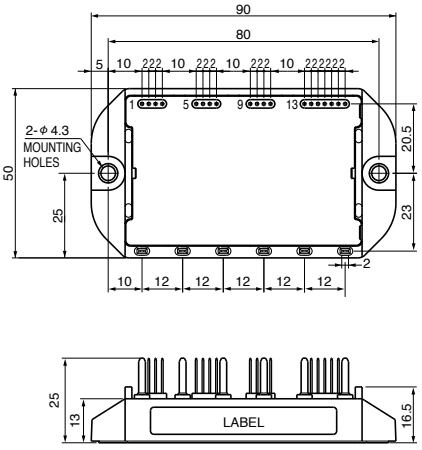

04

PM200,300CL1A/RL1A060
PM100,150CL1A/RL1A120

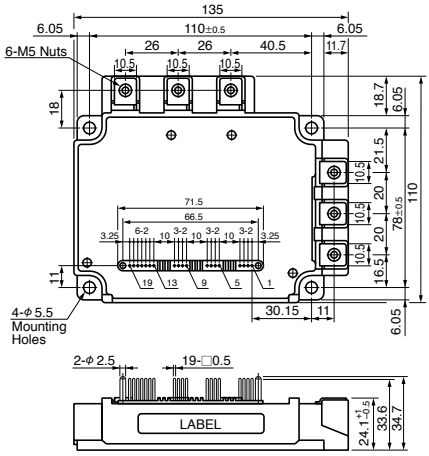

05

PM50,75,100,150,200CS1D060
PM25,50,75,100CS1D120

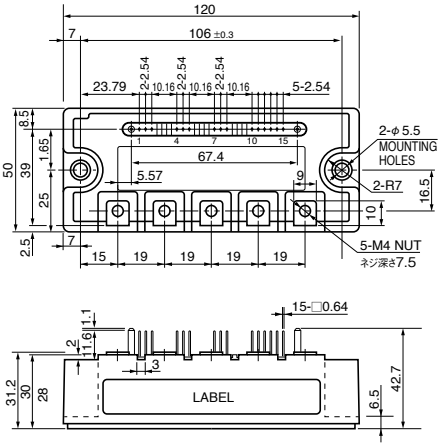

06

PM400,600DV1A060
PM200,300,450DV1A120

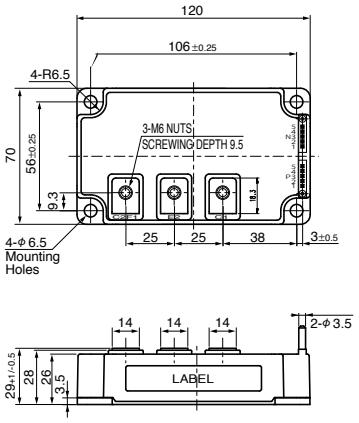

07

PM800DV1B060

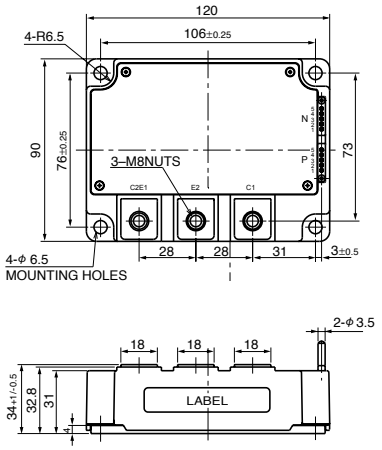

08

PM450,600CLA060
PM200,300,450CLA120

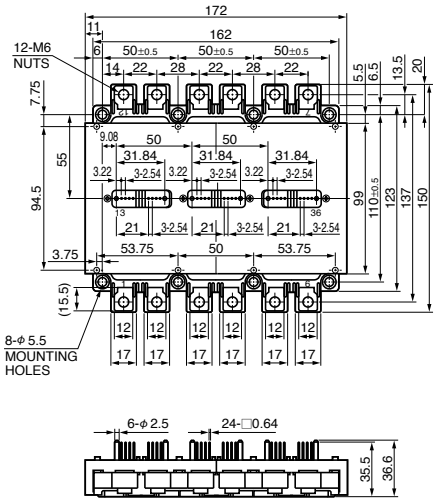

09

PM50,75,100CG1AP/CG1APL/RG1AP/RG1APL065
PM25,50CG1AP/CG1APL/RG1AP065

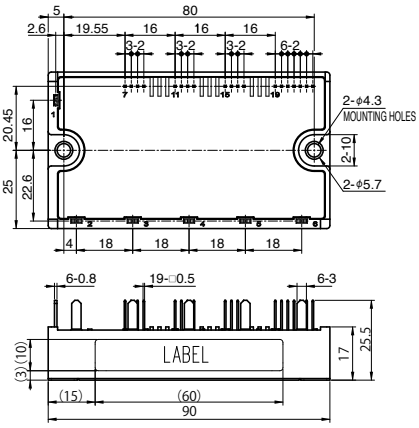

Outline Drawing of IPM

Unit:mm

10

PM50,75,100,200CG1B/RG1B065
PM25,50,75,100CG1B/RG1B120

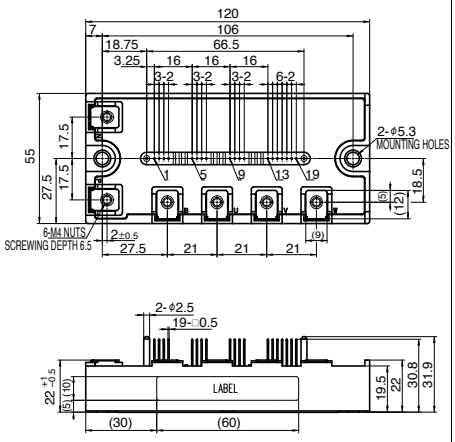

11

PM200,300,400,450CG1C/RG1C065
PM100,150,200CG1C/RG1C120

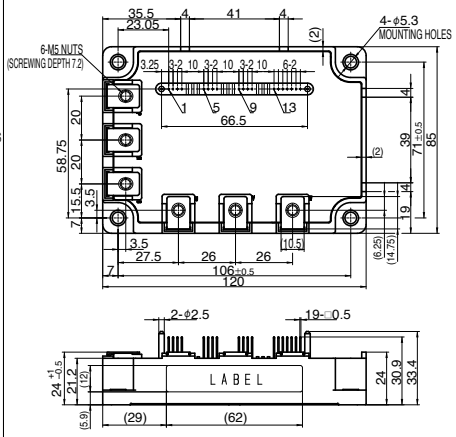

12

PM50,75,100CG1A/RG1A065
PM25,50CG1A/CG1AL/RG1A120

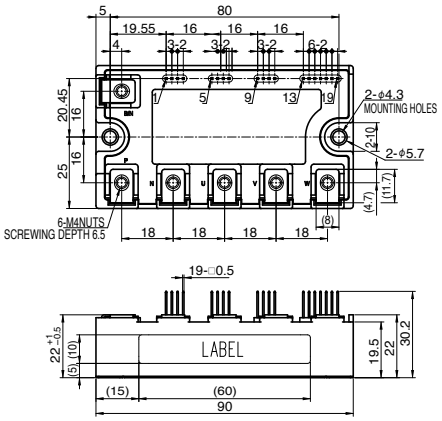

Line-up of MOSFET Modules

Series Matrix of MOSFET Modules

RoHS directive compliant

V_{DSS} / I_D (A)	75V	Connection	100V	Connection	150V	Connection
100	FM200TU-07A	T	FM200TU-2A	T	FM200TU-3A	T
200	FM400TU-07A	T	FM400TU-2A	T	FM400TU-3A	T
300	FM600TU-07A	T	FM600TU-2A	T	FM600TU-3A	T
Connection	T 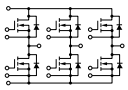					

Outline Drawing of MOSFET Modules

Unit : mm

FM200TU-07A, -2A, -3A
FM400TU-07A, -2A, -3A
FM600TU-07A, -2A, -3A

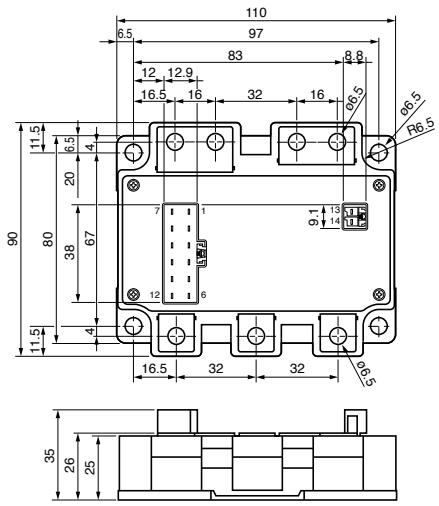

New Products

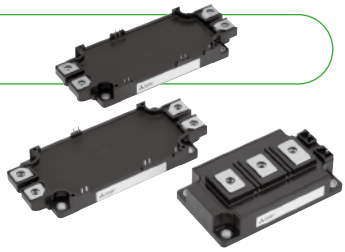

New lineup contributes to simplifying design, downsizing, energy-saving s of industrial inverters.

IGBT Module T-Series

<Main Features>

- New modules equipped with three-phase converter, inverter, and brake circuit(CIB), contributes to simplifying design for inverter systems.
- CIB modules Contributing to compact inverter systems by reducing package size by 36% compared to the Mitsubishi Electric's existing module.(CIB)
- Power loss has been reduced with the introduced of the 7th-generation IGBT produced using CSTBT™*2 and a diode incorporating a relaxed field of cathode (RFC) structure, which contributes to reducing the power consumed in inverters.
- The new structure introduced eliminates the solder-attached section, and the thermal cycle lifetime has been increased, which contributes to improving the reliability of inverters.
- The introduction of press-fit pins and PC-TIM*1 contribute to simplifying the assembly process for inverters.

*1 PC-TIM: Phase change - thermal interface material
*2 CSTBT™: Mitsubishi Electric's unique IGBT that makes use of the carrier cumulative effect.

Conpared package size of IGBT Module (CIB)

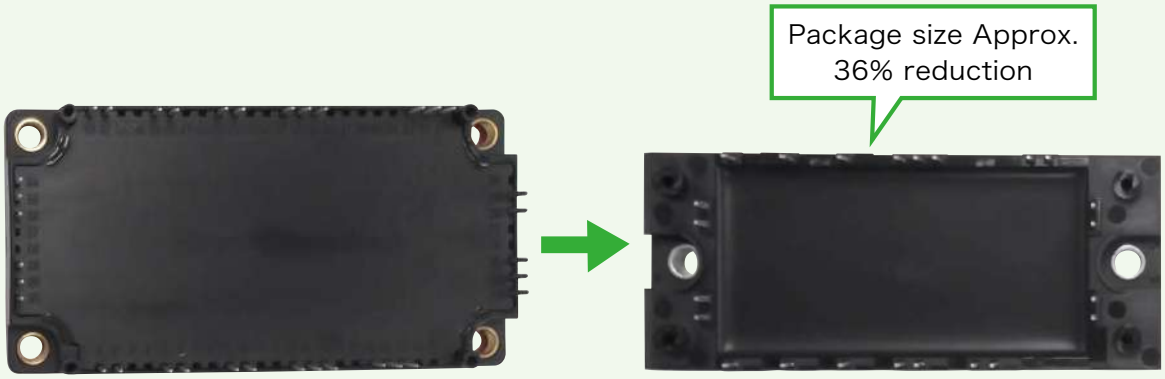

Conventional package
(1200V/75A, CIB-M package)

IGBT Module T-series CIB
(1200V/75A, CIB-S package)

Internal circuit diagram of IGBT Module T-Series (CIB)

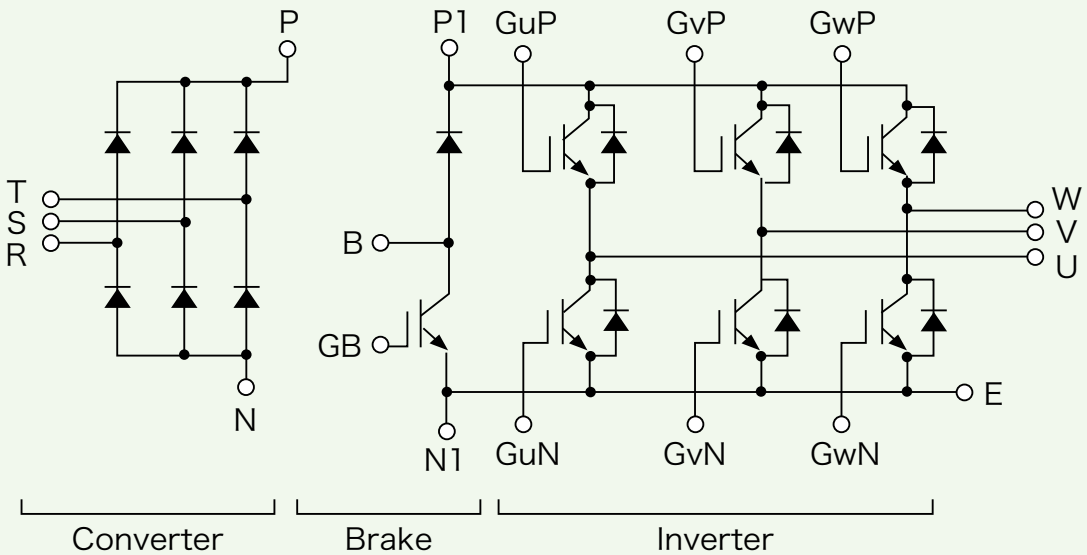

New structure realizes improved reliability (improved thermal cycle lifetime)

NX package structure comparison
6th-generation IGBT

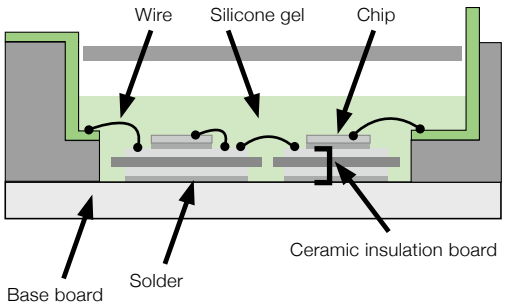

Compared to standard (std) package structure
6th-generation IGBT

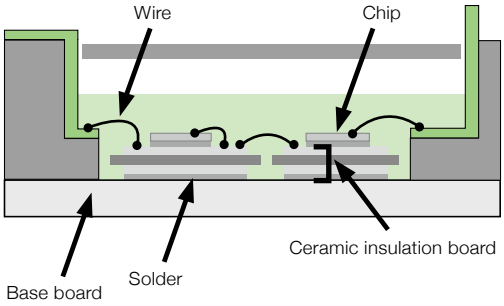

7th-generation IGBT

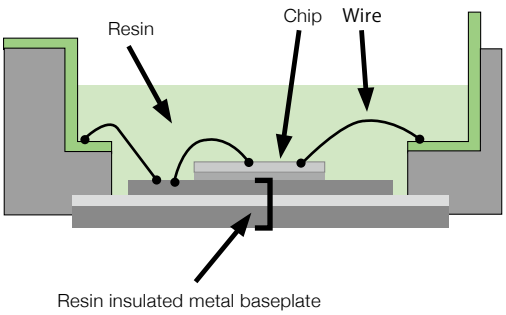

※Adopts SoLid Cover(SLC) Technology

7th-generation IGBT

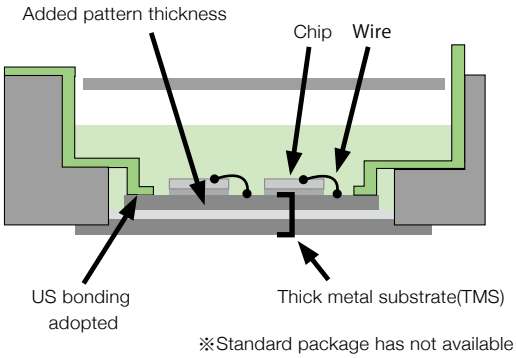

※Standard package has not available for CIB

Assembly process simplified

◆ PC-TIM support

- Handling simple using heat dissipation grease
- Heat dissipation application process eliminated
- Contact heat resistance reduced through high thermal conductivity
- High heat resistance improves quality
- Disparity in contact heat resistance reduced by managing thickness

■PC-TIM application

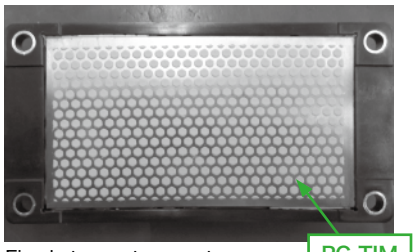

Fixed at room temperature

■After temperature rise

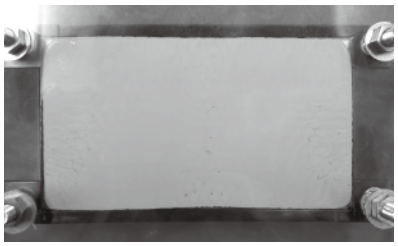

Liquefied and spread like grease

◆ Press-fit terminal support (NX)

- Possible to select the control pin shape (soldered terminals/press-fit terminals)
- Solder attachment process eliminated

■Press-fit pin

①Main pin

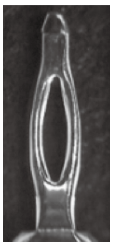

②Signal pin

Feature Products

Contributes to realizing smaller, energy-saving large-capacity inverters

Power Module for 3-level Inverter

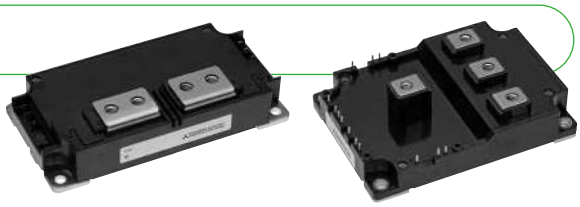

1-in-1 / 2-in-1 type　　4-in-1 type

<Main Features>
- Compatible with 3-level inverters, reducing power consumption approx. 30%*1
- New package developed*2 contributing to lower inductance and simplified inverter circuit structure
- IGBT specifications optimized*3 with development of new compact, low-inductance package
- 4-in-1*4 and 1-in-1/2-in-1*5 lineup contributes to improved compactness and freedom in inverter design

*1 Comparison between 3-level inverter incorporated in this device and 2-level inverter in conventional device.
*2 1-in-1/2-in-1 type external dimensions of 130x67mm, 4-in-1 type external dimensions of 115x82mm, new package developed with innovative terminal positioning.
*3 IGBT specifications optimized for 3-level inverters, adopting CSTBT™ (Mitsubishi Electric's unique IGBT that makes use of the carrier cumulative effect).
*4 4-in-1 module with one 3-level inverter arm in one package.
*5 Bidirectional switch model as emitter common connection.

Internal circuit diagram

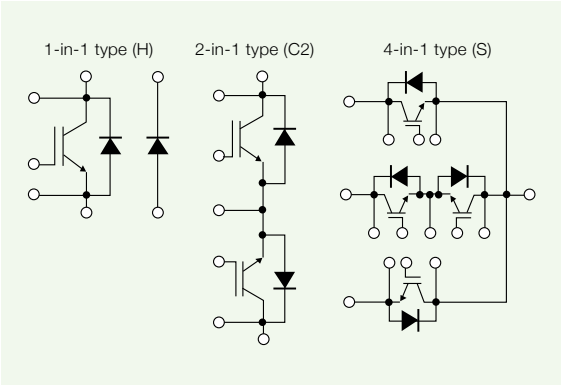

Lineup

Main application	Model	Module type	Rated voltage	Rated current	Circuit structure	External dimensions W×D (mm)
125-500kW inverter	CM400ST-24S1	IGBT	1200V	400A	4-in-1	115×82
500kW - inverter	CM1400HA-24S	IGBT	1200V	1400A	1-in-1	130×67
	RM1400HA-24S	Diode	1200V	1400A	1-in-1	130×67
	CM1000HA-34S	IGBT	1700V	1000A	1-in-1	130×67
	CM500C2Y-24S	IGBT	1200V	500A	2-in-1	130×67

Evolution of IGBT Module Series

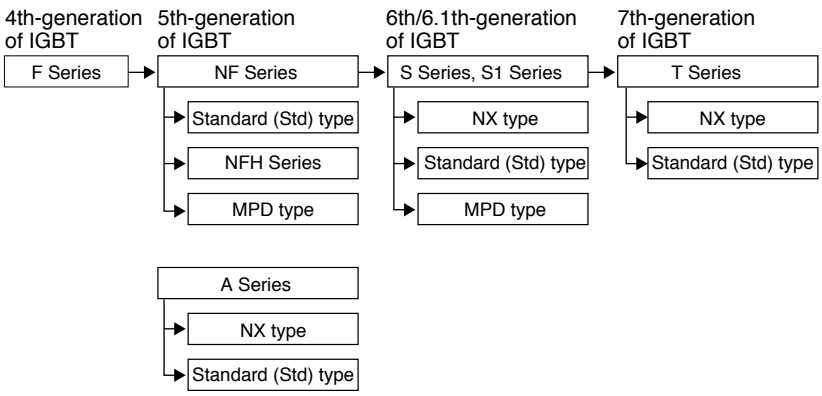

Type Name Definition of IGBT Modules

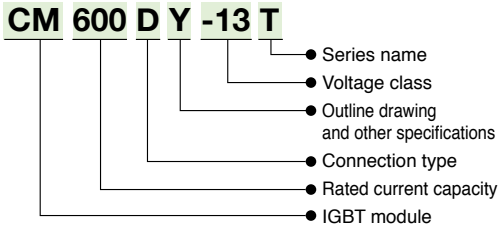

Features of IGBT Module Series

S Series

- Lineup includes various package types
- 6th-generation CSTBT™ delivers low-loss performance
- Thinner package (Height: 17mm) (NX type)
- Suited to large-capacity applications (1200V/2500A, 1700V/1800A) (MPD type)

MPD: Mega power dual

NFH Series

- High-speed CSTBT™ delivers low-loss performance
- Soft switching (resonant) turn-off function (ZVS)
- Enhanced inner wiring (skin effect)

CSTBT™: Mitsubishi Electric's unique IGBT that makes use of the carrier cumulative effect.

Line-up of IGBT Modules

Matrix of IGBT Modules 650V/600V (No.: Number of outline drawing, see page 19 to 20)

RoHS directive (2011/65/EU) compliant

V_{CES}(V)	650V						600V										
Series / I_C(A)	T/T1-Series NX Type	Connection	No.	T-Series std Type	Connection	No.	A-Series NX Type	Connection	No.	NF-Series	Connection	No.	NF-Series NFH Type	Connection	No.
50	CM50MXUB-13T★★ CM50MXUB-13T1★★ CM50MXUBP-13T★★ CM50MXUBP-13T1★★	M M M M	43 43 - -												
75	CM75MXUB-13T★★ CM75MXUB-13T1★★ CM75MXUBP-13T★★ CM75MXUBP-13T1★★	M M M M	43 43 - -				CM75MX-12A	M	01	CM75TL-12NF CM75RL-12NF	T R	07 07			
100	CM100TX-13T★ CM100TXP-13T★ CM100MXUB-13T★★ CM100MXUB-13T1★★ CM100MXUBP-13T★★ CM100MXUBP-13T1★★ CM100MXUD-13T★★ CM100MXUD-13T1★★ CM100MXUDP-13T★★ CM100MXUDP-13T1★★	T T M M M M M M M M	34 38 43 43 - - 45 45 - -	CM100DY-13T★	D	31	CM100MX-12A CM100RX-12A	M R	01 02	CM100TL-12NF CM100RL-12NF	T R	07 07	CM100DUS-12F	D	13
150	CM150TX-13T★ CM150TXP-13T★ CM150RX-13T★ CM150RXP-13T★ CM150MXUD-13T★★ CM150MXUD-13T1★★ CM150MXUDP-13T★★ CM150MXUDP-13T1★★	T T R R M M M M	34 38 35 39 45 45 - -	CM150DY-13T★	D	31	CM150RX-12A	R	02	CM150DY-12NF CM150TL-12NF CM150RL-12NF	D T R	08 07 07	CM150DUS-12F	D	13
200	CM200TX-13T★ CM200TXP-13T★ CM200RX-13T★ CM200RXP-13T★	T T R R	34 38 35 39	CM200DY-13T★	D	31	CM200RX-12A	R	02	CM200DY-12F CM200TL-12NF CM200RL-12NF	D T R	08 09 09	CM200DU-12NFH	D	13
225															
300	CM300DX-13T★ CM300DXP-13T★	D D	29 40	CM300DY-13T★	D	32	CM300DX-12A	D	03	CM300DY-12NF	D	08	CM300DU-12NFH	D	14
400				CM400DY-13T★	D	32	CM400DX-12A	D	03	CM400DY-12NF	D	10	CM400DU-12NFH	D	14
450	CM450DX-13T★ CM450DXP-13T★	D D	29 40												
600	CM600DX-13T★ CM600DXP-13T★	D D	29 40	CM600DY-13T★	D	33				CM600DY-12NF	D	11	CM600DU-12NFH	D	15
1000															

Connection

D
T 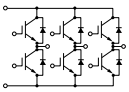
R 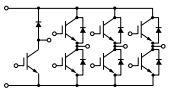
M 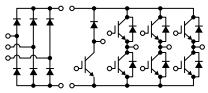

★★: Under Development ★: New Product Non-recommended : Please contact to the sales offices.

Matrix of Power Modules for 3-level Inverter (No.: Number of outline drawing, see page 22 to 23)

RoHS directive (2011/65/EU) compliant

V_{CES}/V_{RRM}	1200 V IGBT Module			1700 V IGBT Module			1200 V Diode Module			1700 V Diode Module		
I_C/I_F	T/S/S1-Series std Type	Connection	No.	S/S1-Series std Type	Connection	No.	S/S1-Series std Type	Connection	No.	S/S1-Series std Type	Connection	No.
400	CM400ST-24S1★ CM400C1Y-24S	S C1	36 11									
450	CM450C1Y-24T★★	C1	33									
500	CM500C2Y-24S★	C	37									
600	CM600C1Y-24T★	C1	33	CM600HA-34S★	H	37				RM600DY-34S★	D	33
800				CM800HA-34S★	H	37				RM800DY-34S★	D	33
1000				CM1000HA-34S★	H	37						
1400	CM1400HA-24S★	H	37				RM1400HA-24S★	H	37			

Connection

IGBT module C1 C2 H S 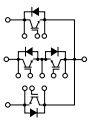

Diode module H D 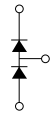

∗Connection of diode module and IGBT module are different.

★★: Under Development ★: New Product

Line-up of IGBT Modules

Matrix of IGBT Modules 1200V (No.: Number of Outline Drawing, see page 19 to 23)

RoHS directive (2011/65/EU) compliant

V_{CES}(V)	1200V																				
Series / I_C	T/T1-Series NX Type	Connection	No.	T-Series std Type	Connection	No.	S/S1-Series NX Type	Connection	No.	S/S1-Series std Type	Connection	No.	S/S1-Series MPD Type	Connection	No.	A-Series※1 NF-Series※1	Connection	No.
35	CM35MXUA-24T★★ CM35MXUA-24T1★★ CM35MXUAP-24T★★ CM35MXUAP-24T1★★	M M M M	42 42 - -				CM35MXA-24S	M	04									
50	CM50MXUA-24T★★ CM50MXUA-24T1★★ CM50MXUAP-24T★★ CM50MXUAP-24T1★★	M M M M	42 42 - -				CM50MXA-24S	M	04							CM50RL-24NF CM50TL-24NF	R T	07 07
75	CM75MXUB-24T★★ CM75MXUB-24T1★★ CM75MXUBP-24T★★ CM75MXUBP-24T1★★ CM75MXUC-24T★★ CM75MXUC-24T1★★ CM75MXUCP-24T★★ CM75MXUCP-24T1★★	M M M M M M M M	43 43 - - 44 44 - -				CM75MXA-24S CM75TX-24S CM75RX-24S	M T R	04 05 02							CM75RL-24NF CM75TL24NF	R T	07 07
100	CM100TX-24T★ CM100TXP-24T★ CM100RX-24T★ CM100RXP-24T★ CM100MXUC-24T★★ CM100MXUC-24T1★★ CM100MXUCP-24T★★ CM100MXUCP-24T1★★	T T R R M M M M	34 38 35 39 44 44 - -	CM100DY-24T★	D	31	CM100MXA-24S CM100TX-24S1 CM100RX-24S1	M T R	04 26 27							CM100DY-24A CM100DY-24NF CM100E3Y-24NF CM100RL-24NF CM100TL-24NF CM100DU-24NFH	D D E3 R T D	08 08 08 07 07 13
150	CM150TX-24T★ CM150TXP-24T★ CM150RX-24T★ CM150RXP-24T★ CM150MXUD-24T★★ CM150MXUD-24T1★★ CM150MXUDP-24T★★ CM150MXUDP-24T1★★	T T R R M M M M	34 38 35 39 45 45 - -	CM150DY-24T★	D	31	CM150DX-24S CM150EXS-24S CM150TX-24S1 CM150RX-24S1	D E T R	03 25 26 27							CM150DY-24A CM150DY-24NF CM150E3Y-24NF CM150RL-24NF CM150TL-24NF CM150DU-24NFH	D D E3 R T D	08 08 08 09 09 13
200	CM200TX-24T★ CM200TXP-24T★	T T	34 38	CM200DY-24T★	D	32	CM200EXS-24S CM200RXL-24S	E R	25 22							CM200DY-24A CM200DY-24NF CM200RL-24NF CM200TL-24NF CM200DU-24NFH	D D R T D	08 10 09 09 14
225	CM225DX-24T★ CM225DXP-24T★	D D	29 40				CM225DX-24S1	D	28									
300	CM300DX-24T★ CM300DXP-24T★	D D	29 40	CM300DY-24T★	D	32	CM300DX-24S1 CM300EXS-24S CM300RXL-24S1★	D E R	28 25 22	CM300DY-24S	D	10				CM300DY-24A CM300DY-24NF CM300DU-24NFH	D D D	10 11 14
400																CM400DY-24A CM400HA-24A CM400DY-24NF CM400DU-24NFH	D H D D	11 16 11 15
450	CM450DX-24T★ CM450DXP-24T★	D D	29 40	CM450DY-24T★	D	33	CM450DX-24S1	D	28	CM450DY-24S	D	11						
600	CM600DX-24T★ CM600DXP-24T★	D D	29 40	CM600DY-24T★	D	33	CM600DX-24S1 CM600DXL-24S	D D	28 6	CM600DY-24S	D	11				CM600DY-24A CM600HA-24A CM600DU-24NF CM600DU-24NFH	D H D D	11 16 12 15
800										CM800DY-24S	D	12						
900													CM900DUC-24S	D	17			
1000	CM1000DX-24T★ CM1000DXP-24T★	D D	30 41				CM1000DXL-24S	D	06									
1400										CM1400HA-24S★	H	37	CM1400DUC-24S	D	17			
1800																		
2500													CM2500DY-24S	D	19			

Connection

H
D
T 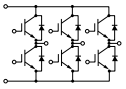
R 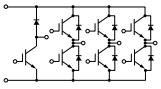
M 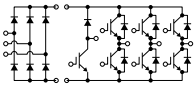
E
E3

*1: A-Series have model namse ending with A, NF-Series have model name ending with NF/NFH

★★: Under Development ★: New Product

Matrix of IGBT Modules 1700V

RoHS directive (2011/65/EU) compliant

V_{CES}(V)	1700V																				
Series / I_C	T-Series NX Type	Connection	No.	T-Series std Type	Connection	No.	S/S1-Series NX Type	Connection	No.	S/S1-Series std Type	Connection	No.	S/S1-Series MPD Type	Connection	No.	A-Series std Type	Connection	No.
35																		
50																		
75				CM75DY-34T**	D	31	CM75MXA-34SA CM75RX-34SA	M R	24 20							CM75DY-34A	D	08
100	CM100TX-34T** CM100TXP-34T**	T T	34 38	CM100DY-34T**	D	31										CM100DY-34A	D	08
150	CM150TX-34T** CM150TXP-34T**	T T	34 38	CM150DY-34T**	D	32	CM150DX-34SA CM150RXL-34SA	D R	21 22							CM150DY-34A	D	10
200				CM200DY-34T**	D	32	CM200DX-34SA CM200EXS-34SA	D E	21 25							CM200DY-34A	D	10
225	CM225DX-34T** CM225DXP-34T**	D D	29 40															
300	CM300DX-34T** CM300DXP-34T**	D D	29 40	CM300DY-34T**	D	33	CM300DX-34SA	D	21							CM300DY-34A	D	11
400				CM400DY-34T**	D	33										CM400DY-34A	D	18
450	CM450DX-34T** CM450DXP-34T**	D D	29 40				CM450DXL-34SA	D	23									
500																CM500HA-34A	H	16
600	CM600DX-34T** CM600DXP-34T**	D D	29 40				CM600DXL-34SA	D	23	CM600HA-34S*	H	37						
800										CM800HA-34S*	H	37						
900																		
1000										CM1000HA-34S*	H	37	CM1000DUC-34SA	D	17			
1400																		
1800													CM1800DY-34S	D	19			
2500																		

Connection

H

D

T 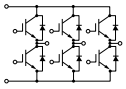

R 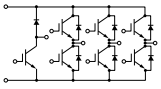

M 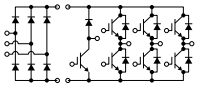

E

★★: Under Development ★: New Product

Line-up of IGBT Modules

Outline Drawing of IGBT Modules

Unit:mm

01 CM75,100MX-12A

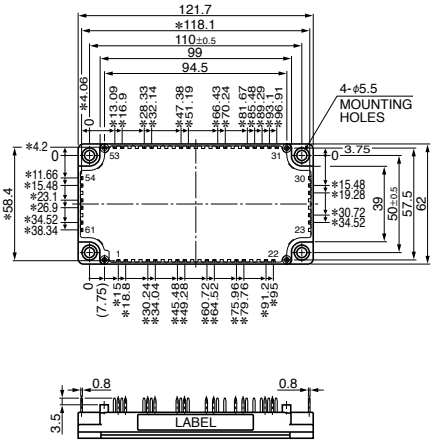

∗All dimensions with a tolerance of ⊕ φ0.5

02 CM100,150,200RX-12A CM75RX-24S

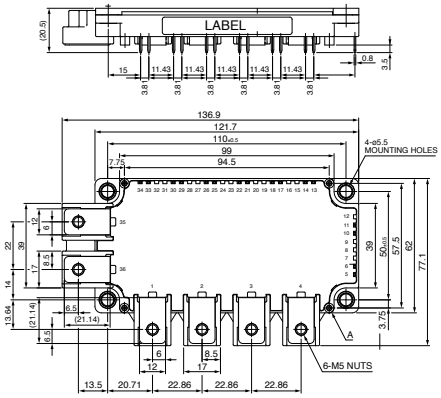

∗All dimensions with a tolerance of ⊕ φ0.5

03 CM300,400DX-12A CM150,200DX-24S

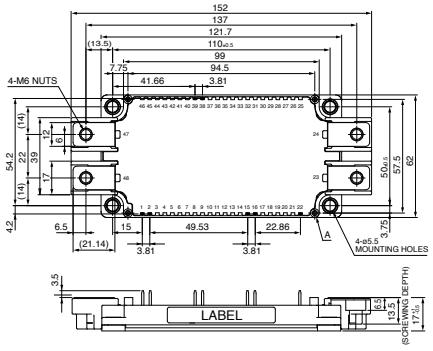

∗All dimensions with a tolerance of ⊕ φ0.5

04 CM35,50,75,100MXA-24S

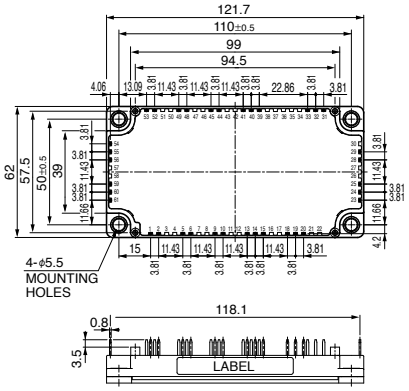

05 CM75TX-24S

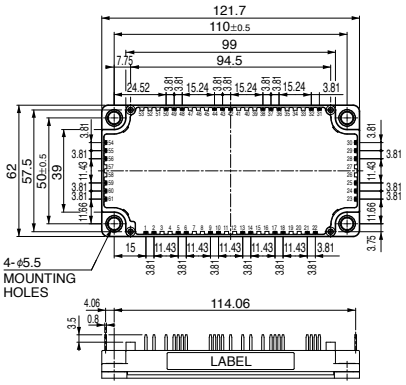

06 CM600,1000DXL-24S

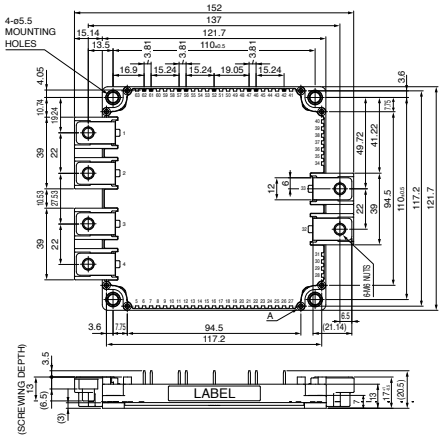

∗All dimensions with a tolerance of ⊕ φ0.5

07 CM75,100,150TL/RL-12NF CM50,75,100TL/RL-24NF

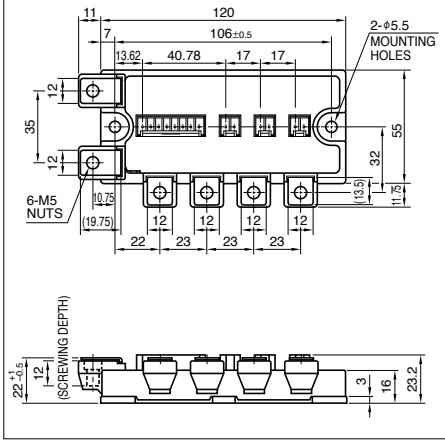

08 CM150,200,300DY-12NF CM100,150DY-24NF CM100,150,200DY-24A CM75,100DY-34A CM100,150E3Y-24NF

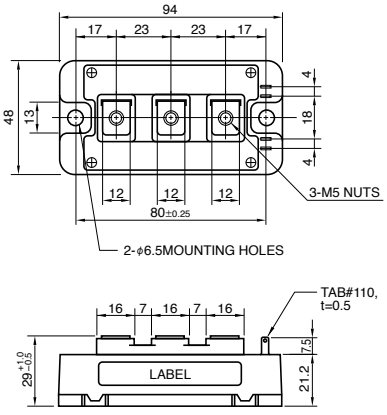

09 CM200TL/RL-12NF CM150,200TL/RL-24NF

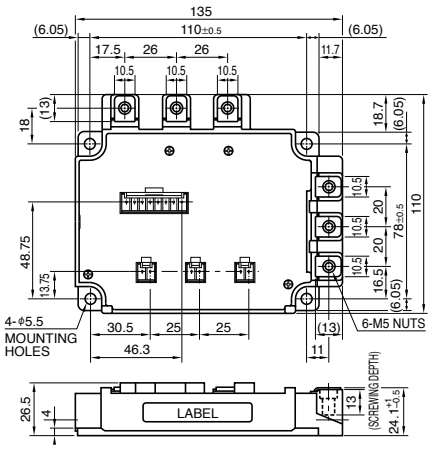

Outline Drawing of IGBT Modules

Unit:mm

10

CM400DY-12NF
CM200DY-24NF
CM300DY-24A
CM300DY-24S
CM150,200DY-34A

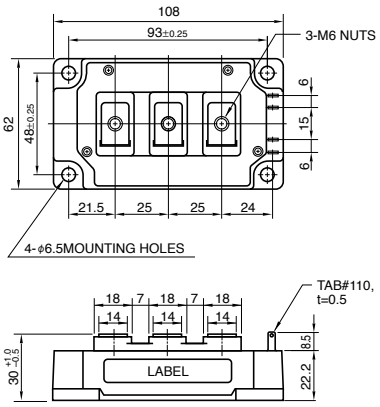

11

CM600DY-12NF
CM400DY-24NF
CM400,600DY-24A
CM300DY-34A

CM400C1Y-24S
CM450DY-24S
CM600DY-24S
CM300DY-24NF

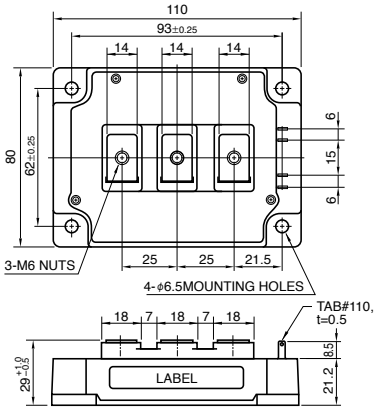

12

CM600DU-24NF
CM800DY-24S

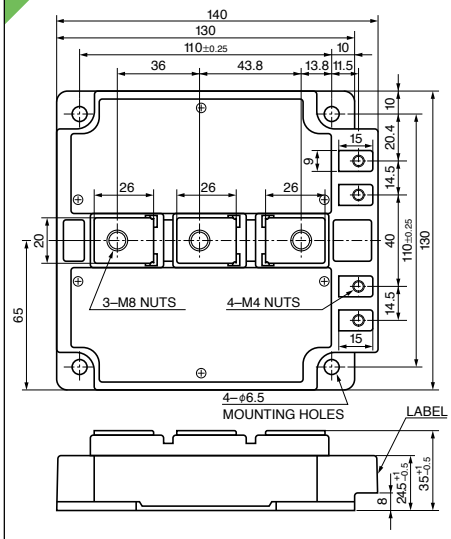

13

CM100,150DUS-12F
CM200DU-12NFH
CM100,150DU-24NFH

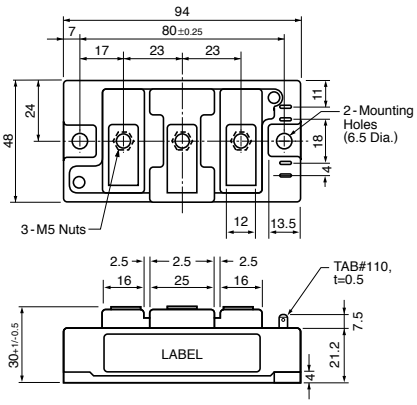

14

CM300,400DU-12NFH
CM200,300DU-24NFH

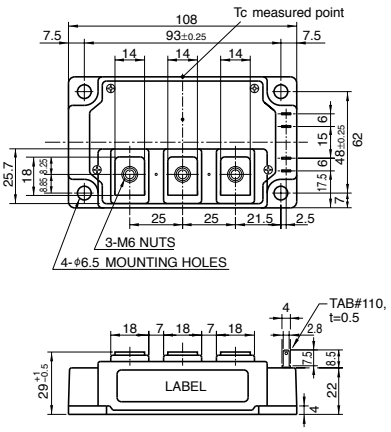

15

CM600DU-12NFH
CM400,600DU-24NFH

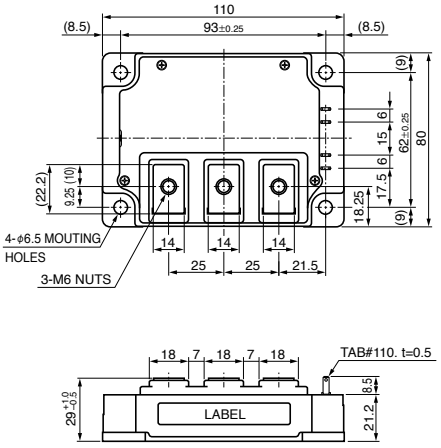

16

CM400,600HA-24A
CM500HA-34A

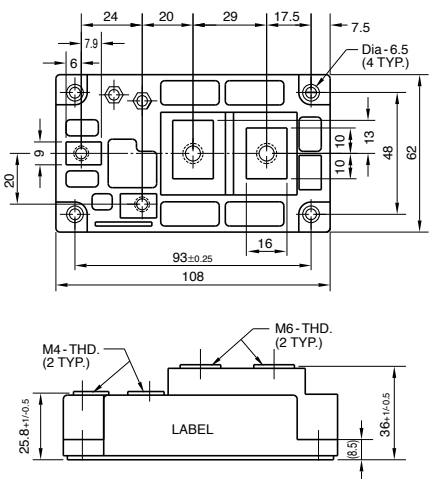

17

CM900,1400DUC-24S
CM1000DUC-34SA

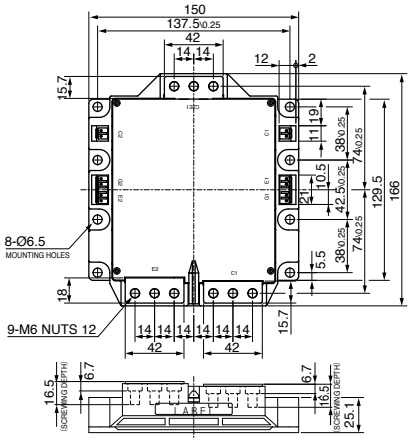

18

CM400DY-34A

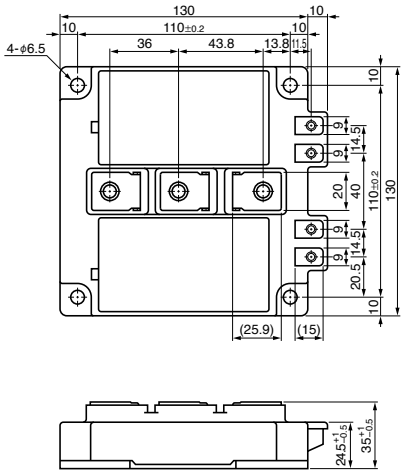

Outline Drawing of IGBT Modules

Unit:mm

19 CM1800DY-34S / CM2500DY-24S

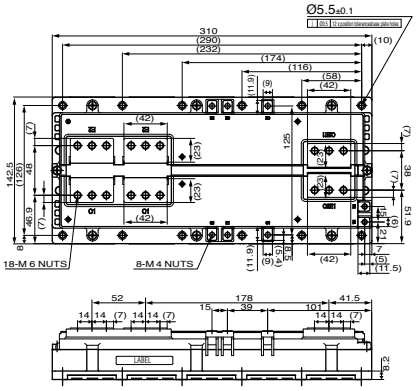

20 CM75RX-34SA

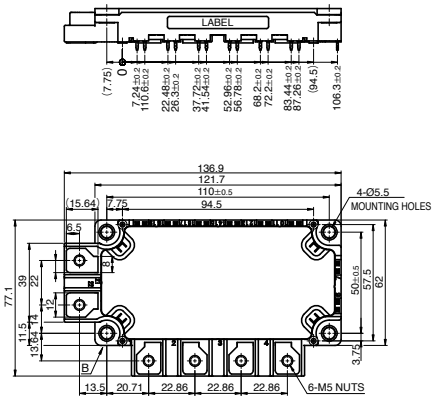

21 CM150DX-34SA / CM200DX-34SA / CM300DX-34SA

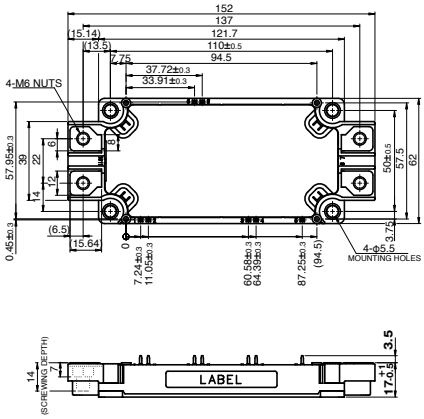

22 CM200RXL-24S / CM300RXL-24S1 / CM150RXL-34SA

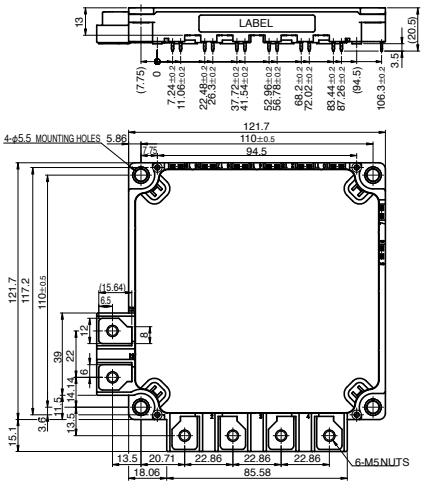

23 CM450DXL-34SA / CM600DXL-34SA

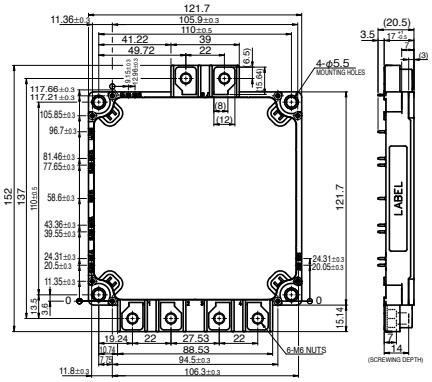

24 CM75MXA-34SA

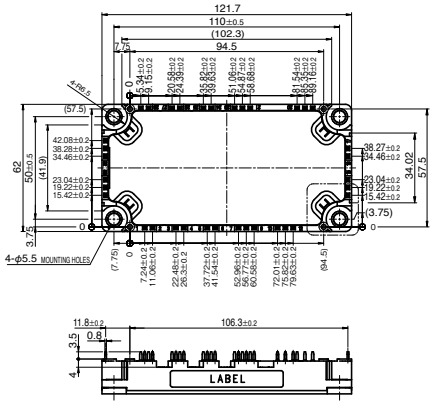

25 CM150EXS-24S / CM200EXS-24S / CM300EXS-24S / CM200EXS-34SA

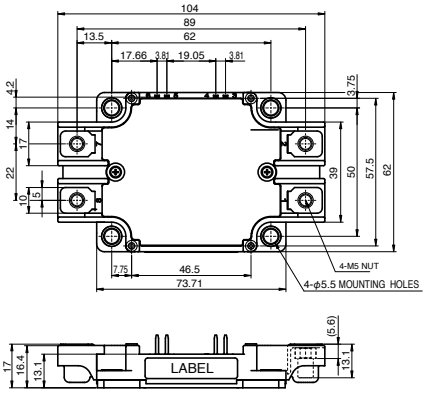

26 CM100TX-24S1 / CM150TX-24S1

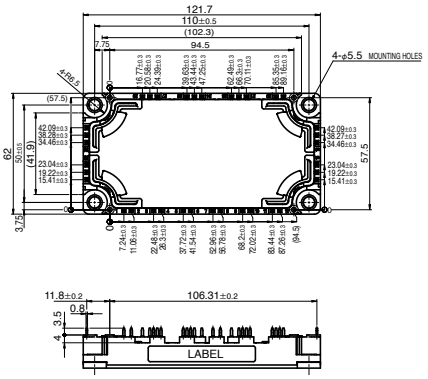

27 CM100RX-24S1 / CM150RX-24S1

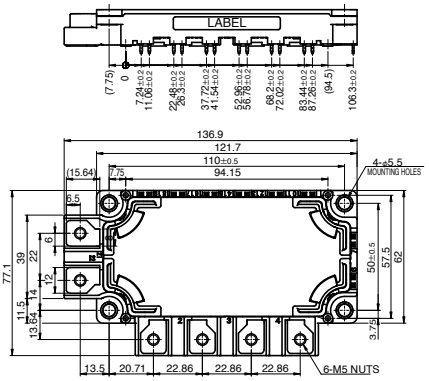

Outline Drawing of IGBT Modules

Unit:mm

28

CM225DX-24S1
CM300DX-24S1
CM450DX-24S1
CM600DX-24S1

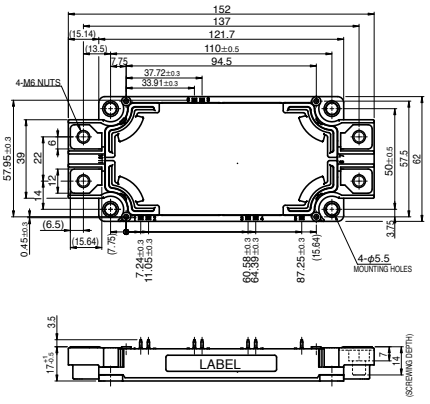

29

CM300,450,600DX-13T
CM225,300,450,600DX-24T

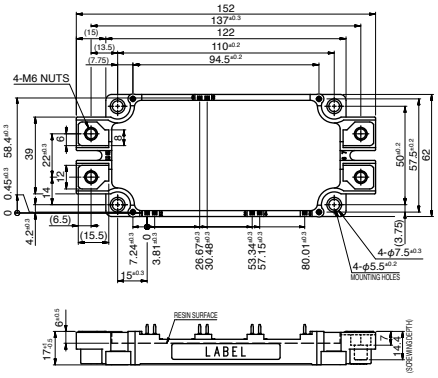

30

CM1000DX-24T

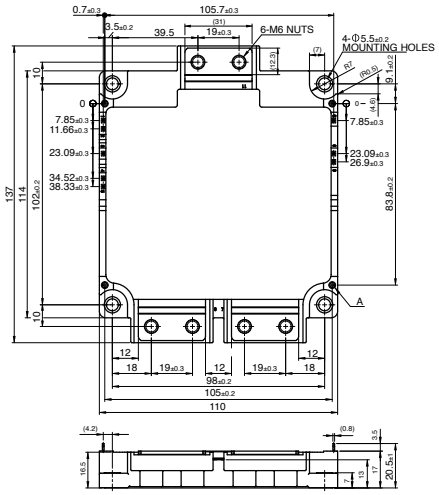

31

CM100,150,200DY-13T
CM100,150DY-24T

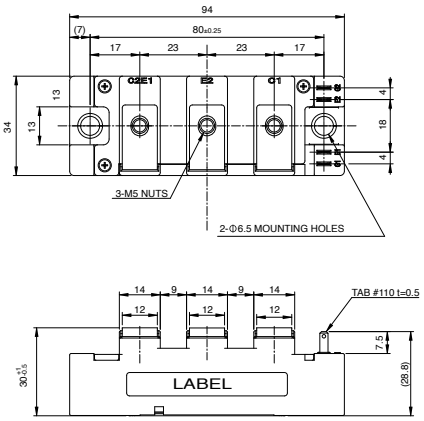

32

CM300,400DY-13T
CM200,300DY-24T

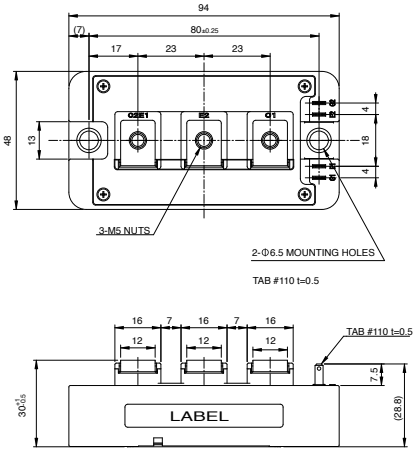

33

CM600DY-13T
CM450,600DY-24T
CM450,600C1Y-24T

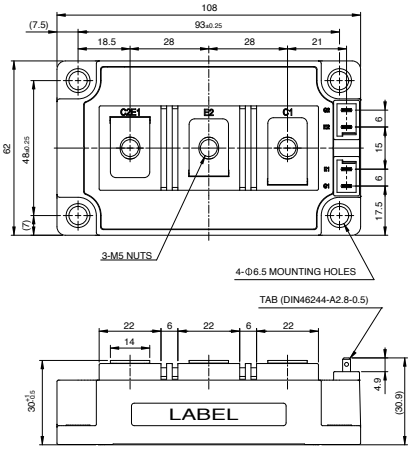

34

CM100,150,200TX-13T
CM100,150,200TX-24T

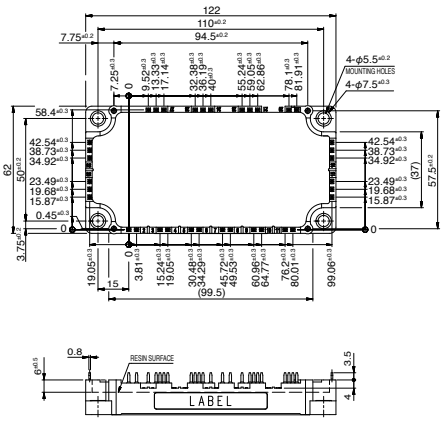

35

CM150,200RX-13T
CM100,150RX-24T

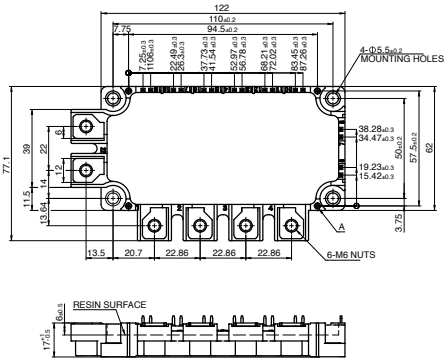

36

CM400ST-24S1

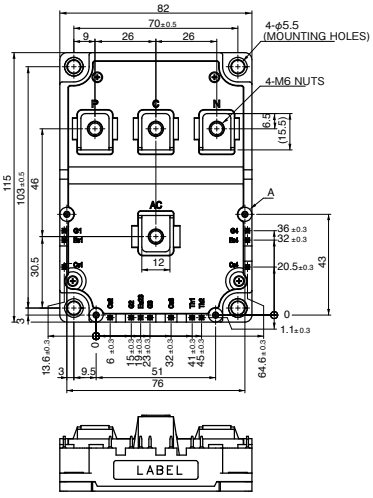

Outline Drawing of IGBT Modules

Unit:mm

37
CM500C2Y-24S
CM1400HA-24S
CM1000HA-34S
RM1400HA-24S

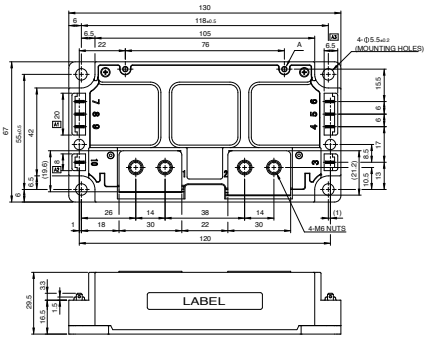

38
CM100,150,200TXP-13T
CM100,150,200TXP-24T

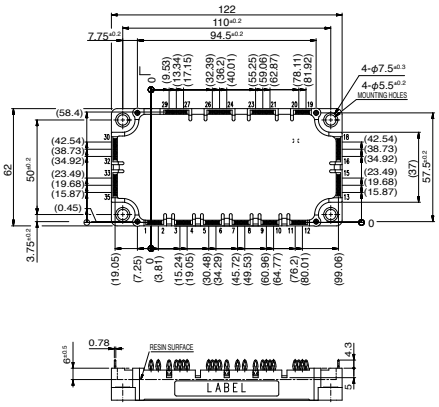

39
CM150,200RXP-13T
CM100,150RXP-24T

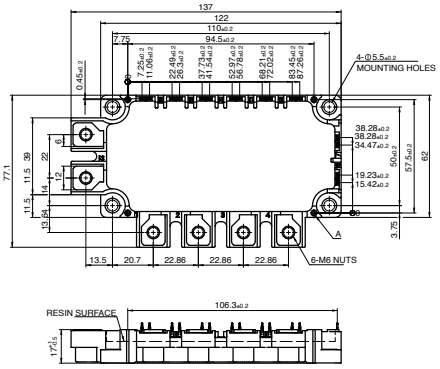

40
CM300,450,600DXP-13T
CM225,300,450,600DXP-24T

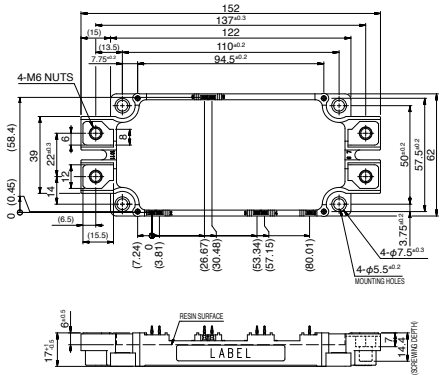

41
CM1000DXP-24T

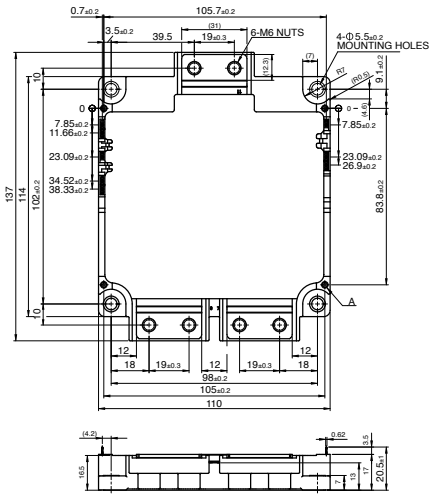

42
CM35,50MXUA-24T/24T1

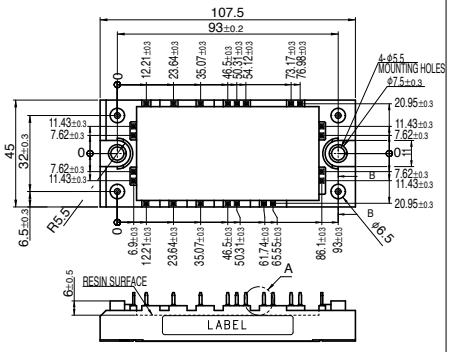

43
CM50,75,100MXUB-13T/13T1
CM75MXUB-24T/24T1

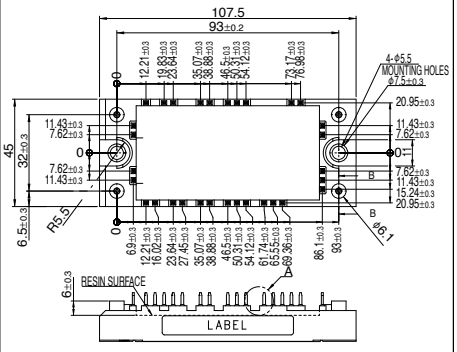

44
CM75,100MXUC-24T/24T1

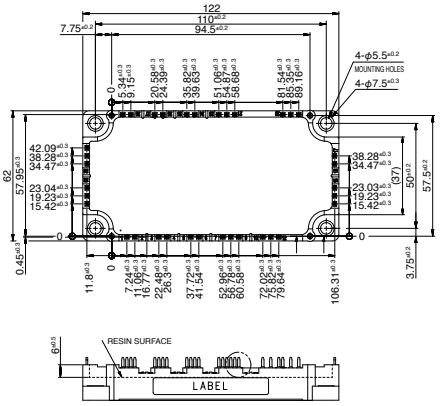

45
CM100/150MXUD-13T/T1
CM150MXUD-24T/T1

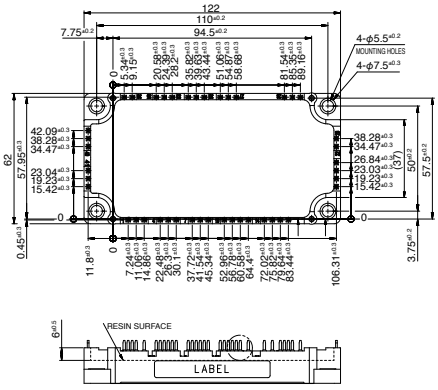

New Products

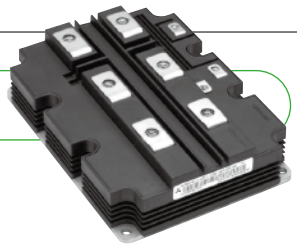

X Series HVIGBT Modules

Compatible package for smaller, higher-capacity inverter systems

	Atanderd (std) Type	
1.7kV		
3.3kV	1800A	1200A
4.5kV	1350A/1500A	900A
6.5kV	900A/1000A	600A

<Main Features>
- Power loss reduced by incorporating 7th-generation IGBT and RFC*1 diode
- Current capacity improved 50% compared to convetional package
- Latest package technology enhances power cycle lifetime
- Compatible package*2 for simplified design and easy replacement
- Maximum operation temperature of 150 degrees Celsius, from 1.7kV to 6.5kV class*3

*1 RFC: Relaxed field of cathode
*2 : HVIGBT H series/R Series
*3 : A world's first for the 6.5kV class Based on Mitsubishi Electric research

New common frame size supports more diverse inverter configurations and capacity

	HV100 Type	LV100 Type
1.7kV		900A
3.3kV	450A	450A
4.5kV	330A	
6.5kV	225A	

<Main Features>
- Power loss reduced by incorporating 7th-generation IGBT and RFC*1 diode
- Contributing to high energy efficiency and high power density by improving package technology for low parasitic inductance and thermal resistance
- LV100 and HV100 modules have a common package design
- Simple, standard connections allow for optimal system design and a range of current ratings

Characteristics graph

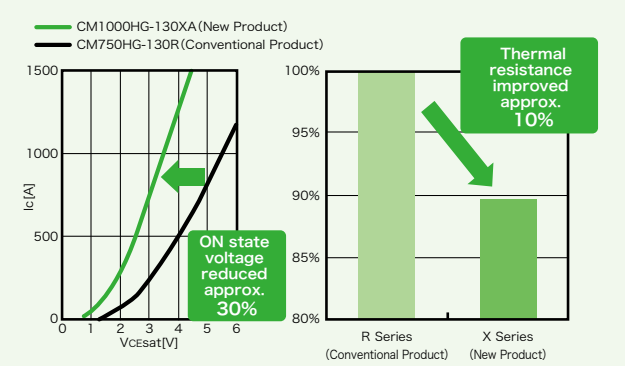

Saturation voltage between collector and emitter (R Series vs X Series)

Heat resistance comparison (R Series vs. X Series)

Output current characteristics

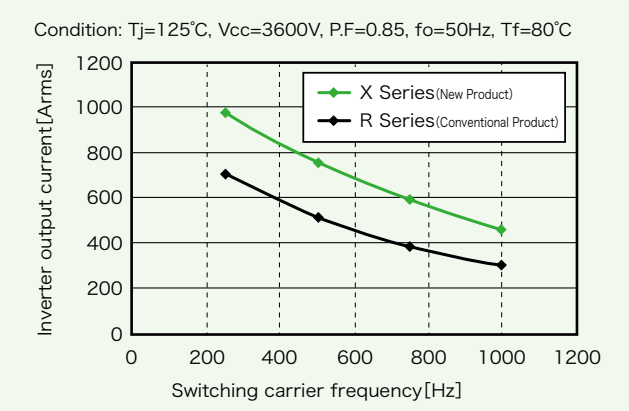

LNFLR structure (edge termination optimized)

Compared to previous product*, active chip area is increased 28% by optimizing edge termination.

* CM750HG-130R

Line-up of HVIGBT Modules

Series Matrix of HVIGBT/HVIPM (No.: Number of outline drawing, see page 26 and 27)

V_{CES} / I_C(A)	1700V	Connection	Type	No.	2500V	Connection	Type	No.	3300V	Connection	Type	No.	4500V	Connection	Type	No.	6500V	Connection	Type	No.
200																	CM200HG-130H	H	D	07
400					CM400DY-50H	D	B	15	CM400HG-66H CM400DY-66H	H D	D B	07 15					CM400HG-130H CM400E2G-130H CM400E4G-130H	H E2 E4	D D D	12 09 09
450									CM450DA-66X★★	D	A	16								
600	CM600DY-34H CM600E2Y-34H	D E2	B B	01 01									CM600HG-90H	H	D	12	CM600HG-130H CM600HG-130X★★	H H	D D	11 13*
750																	CM750HG-130R	H	D	11
800	CM800DZB-34N CM800DZ-34H CM800HA-34H	D D H	C C B	01 01 -	CM800HB-50H	H	B	03	CM800HC-66H CM800E4C-66H CM800E6C-66H CM800HB-66H	H E4 E2 H	C C C B	03 06 06 03	CM800HC-90R CM800HG-90R	H H	C D	08 13				
900													CM900HG-90H CM900HC-90H CM900HB-90H CM900HG-90X★★	H H H H	D C B D	13 09 06 13*	CM900HG-130X★★	H	D	11*
1000									CM1000HC-66R CM1000E4C-66R	H E4	C C	08 10					CM1000HG-130XA★	H	D	11
1200	CM1200HCB-34N CM1200DB-34N CM1200DC-34N CM1200E4C-34N CM1200HC-34H CM1200DC-34S	H D D E4 H D	C B C C C C	03 04 04 05 02 04	CM1200HC-50H CM1200HB-50H	H H	C B	06 06	CM1200HG-66H CM1200HC-66H CM1200HB-66H CM1200HC-66X★★ PM1200HCE330-1	H H H H H	D C B C C	09 06 06 08* 14	CM1200HC-90R CM1200HC-90RA CM1200HG-90R	H H H	C C D	10 10 11				
1350													CM1350HG-90X★★	H	D	11*				
1500									CM1500HC-66R CM1500HG-66R	H H	C D	10 11	CM1500HC-90XA★★	H	C	10*				
1600	CM1600HC-34H	H	C	02																
1800	CM1800HCB-34N CM1800HC-34N CM1800HC-34H	H H H	C C C	06 05 06					CM1800HC-66X★★ CM1800HG-66X★★	H H	C D	10* 11*								
2400	CM2400HCB-34N CM2400HC-34N CM2400HC-34H	H H H	C C C	06 05 06																

Connection

H

E2/E6

E4

D 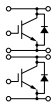

[Type Description] A: Al base plate B:Cu base plate C:AlSiC base plate / 6 kViso D:AlSiC base plate / 10kViso

★★: Under Development ★: New Product

*There are possibility to change the type of auxiliary terminals.

Series Matrix of HVDIODE Modules (No.: Number of outline drawing, see page 28)

V_{PRM} / I_F(A)	1700V	Connection	Type	No.	3300V	Connection	Type	No.	4500V	Connection	Type	No.	6500V	Connection	Type	No.
200													RM200DG-130S	D	D	19
250													RM250DG-130F	D	D	19
300									RM300DG-90S	D	D	19				
400					RM400DG-66S RM400DY-66S	D D	D B	19 20	RM400DG-90F	D	D	19				
600					RM600DY-66S	D	B	20	RM600HE-90S	H	C	18	RM600DG-130S	D	D	19
800									RM800DG-90F	D	D	19				
900									RM900HC-90S RM900DB-90S	H D	C B	22 22				
1000					RM1000DC-66F	D	F	21								
1200	RM1200DB-34S	D	B	17	RM1200DG-66S RM1200HE-66S RM1200DB-66S	D H D	D C B	19 18 22	RM1200DG-90F	D	D	19				
1500					RM1500DC-66F	D	C	21								
1800	RM1800HE-34S	H	C	18												

Connection

H

D

[Type Description] B:Cu base plate C:AlSiC base plate / 6 kViso D:AlSiC base plate / 10kViso

Type Name Definition of IGBT Modules

CM 1800 H C -66 X

- Series name
- Voltage class
- Outline drawing and package type
- Connection type
- Rating current class
- CM: IGBT, RM: DIODE, PM: HVIPM

Outline Drawing of HVIGBT Modules

Unit:mm

01

CM600DY-34H
CM600E2Y-34H
CM800DZ-34H
CM800DZB-34N

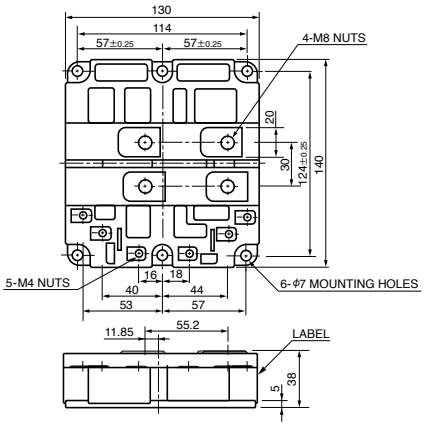

02

CM1200,1600HC-34H

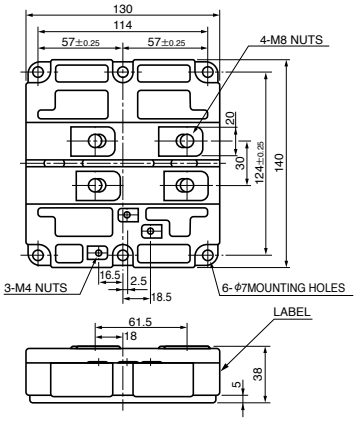

03

CM1200HCB-34N
CM800HB-50H,-66H
CM800HC-66H

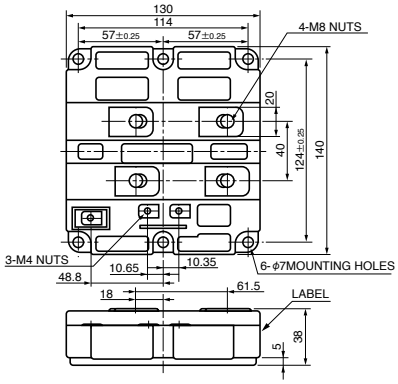

04

CM1200DB/DC-34N
CM1200DC-34S

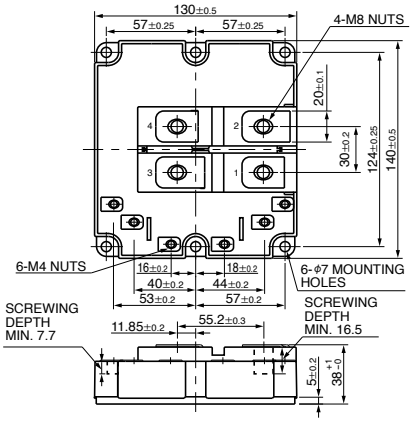

05

CM1200E4C-34N
CM1800,2400HC-34N

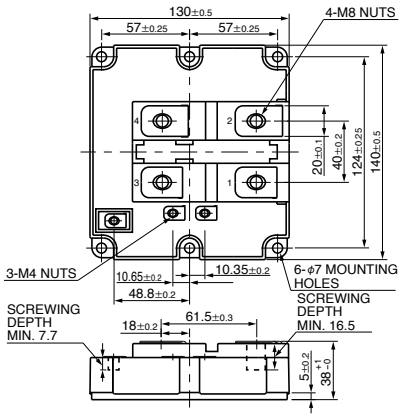

06

CM1800,2400HCB-34N
CM1800,2400HC-34H
CM1200HB/HC-50H,-66H
CM800E4C/E6C-66H
CM900HB/HC-90H

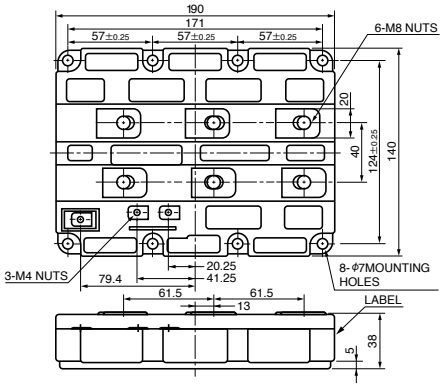

07

CM400HG-66H
CM200HG-130H

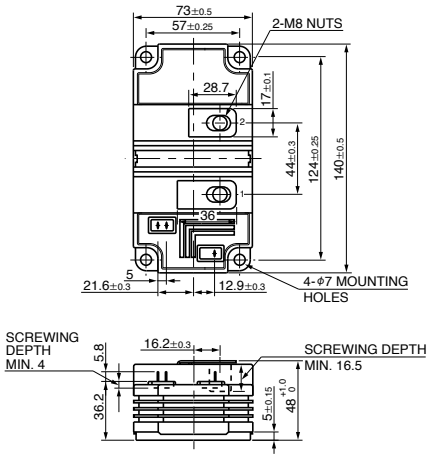

08

CM1000HC-66R
CM1200HC-66X*
CM800HC-90R
CM900HC-90X*

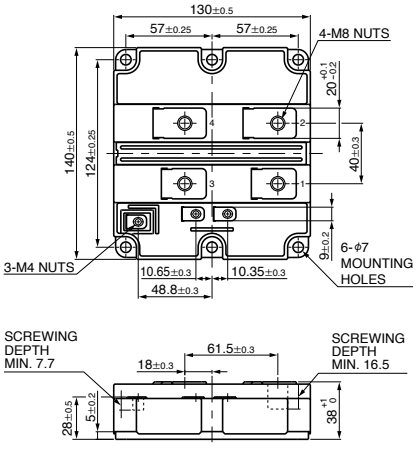

09

CM1200HG-66H
CM900HG-90H
CM400E2G/E4G-130H
CM600HG-130H

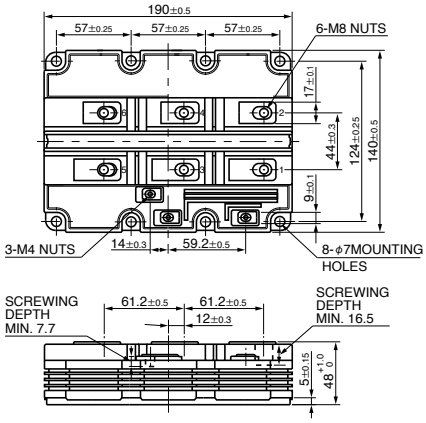

*There are possibility to change the type of auxiliary terminals.

Outline Drawing of HVIGBT Modules

Unit:mm

10

CM1000E4C-66R
CM1500HC-66R
CM1800HC-66X
CM1200HC-90R
CM1350HC-90X*
CM1200HC-90RA
CM1500HC-90XA*

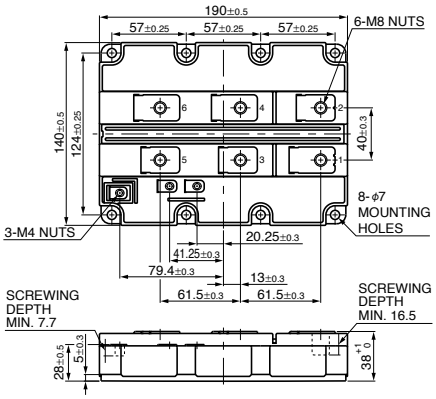

11

CM1500HG-66R
CM1800HG-66X*
CM1200HG-90R
CM1350HG-90X*
CM750HG-130R
CM900HG-130X*
CM1000HG-130XA

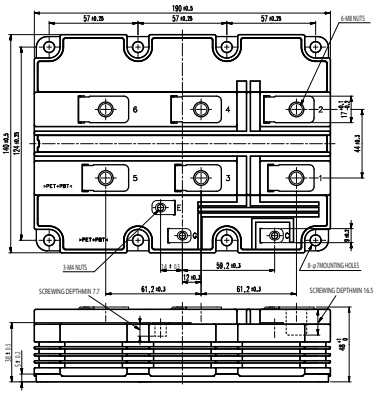

12

CM600HG-90H
CM400HG-130H

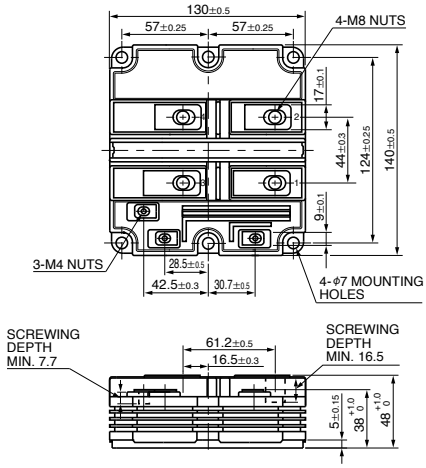

13

CM800HG-90R
CM900HG-90X
CM600HG-130X*

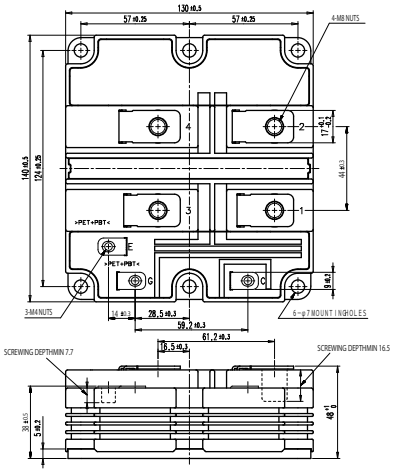

14

PM1200HCE330-1

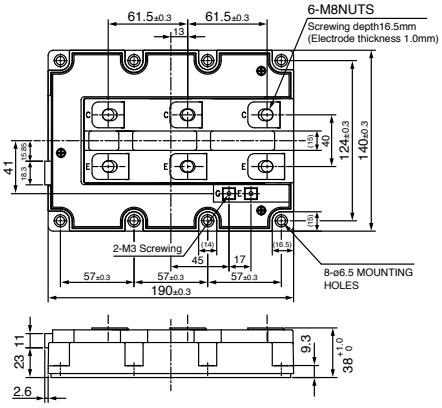

15

CM400DY-50H/66H

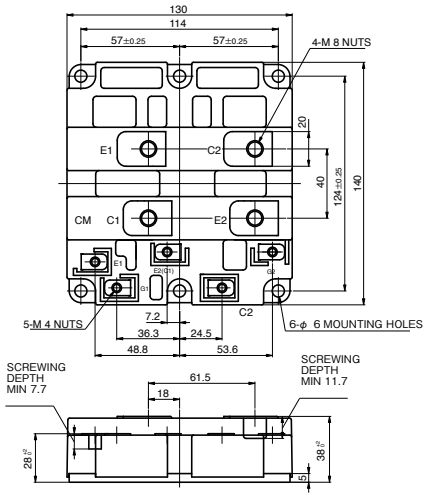

16

CM450DA-66X

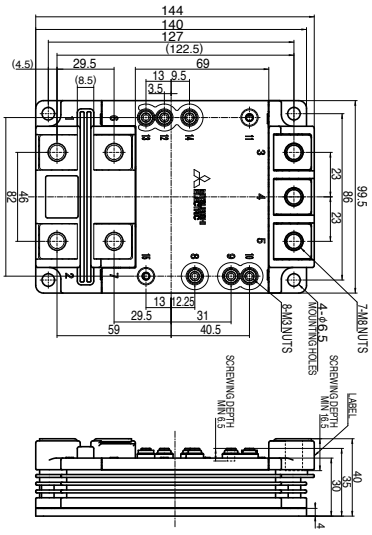

*There are possibility to change the type of auxiliary terminals.

Outline Drawing of HVDIODE Modules

Unit:mm

17 RM1200DB-34S

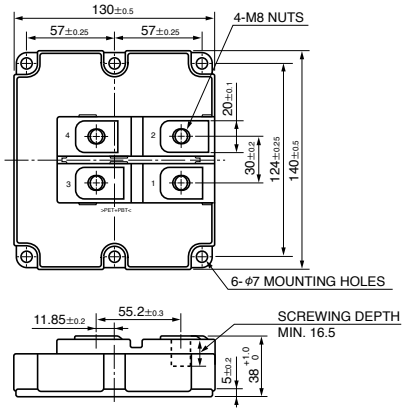

18 RM1800HE-34S RM1200HE-66S RM600HE-90S

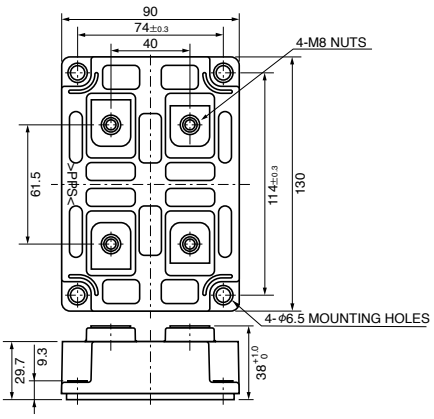

19 RM400,1200DG-66S RM300DG-90S RM400,800,1200DG-90F RM200,600DG-130S RM250DG-130F

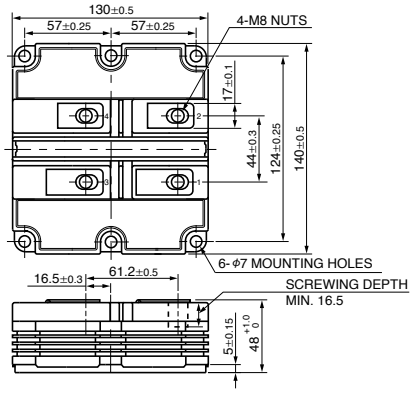

20 RM400,600DY-66S

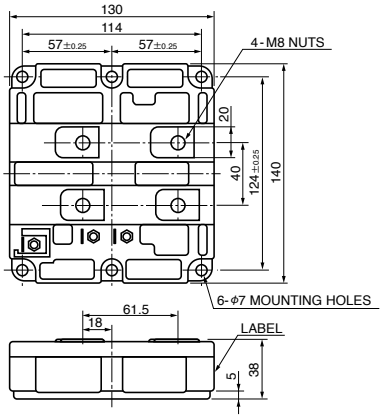

21 RM1000,1500DC-66F

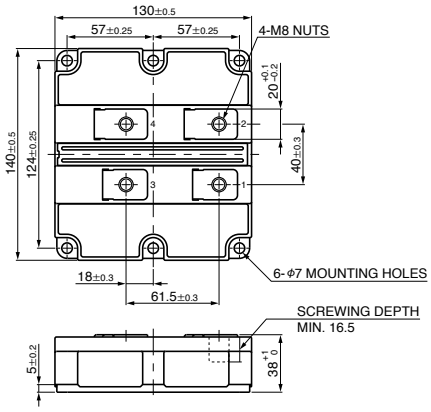

22 RM1200DB-66S RM900DB/HC-90S

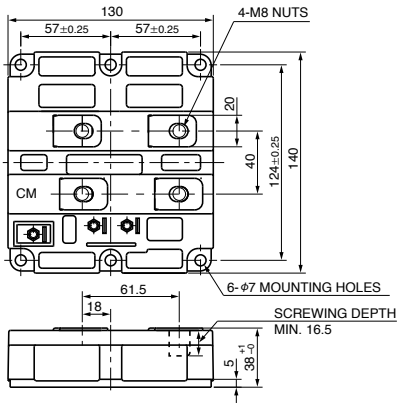

New Products

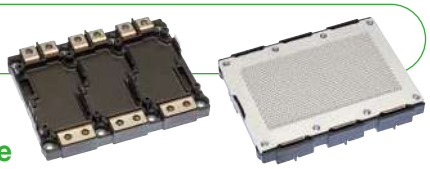

Package with 6-in-1 connection and integrated water-cooled fin contributes to more compact, high-power inverters for Automotive

High Power J1 Series Power Modules for Automotive CT1000CJ1B060, CT600CJ1B120

<Main Features>
- Integrated direct water-cooling structure with cooling fins and 6-in-1 connection contribute to more compact inverters for Automotive
- Direct lead bonding (DLB) structure ensures high reliability
- Loss further reduced by incorporating 7th-generation IGBT built with a CSTBT™* structure
- Completely lead-free, conforms to RoHS directives (2011/65/EU)
- Suitable for a variety of electric and hybrid vehicle inverters

*CSTBT™: Mitsubishi Electric's unique IGBT that utilizes the carrier cumulative effect.

Block Diagram

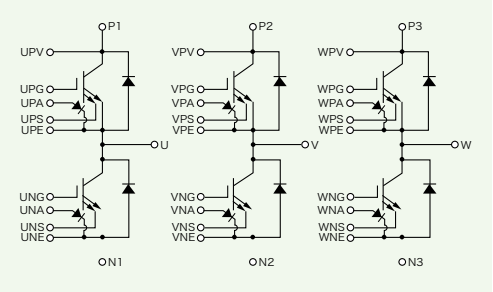

Features

Common

- Long power/temperature cycle life
- High-precision on-chip temperature sensor
- High traceability in managing materials/components for each product throughout the entire production process
- Package structure compliant with the End-of-Life-Vehicles Directive, regulations relating to substances of environmental concern

J Series T-PM (Transfer-molded Power Module)

- Structure incorporates transfer modeling and original direct lead bonding (DLB) technique
- DLB structure reduces internal wiring resistance and inductance
- Completely Pb-free (including the pins)

J1 Series (6-in-1)

- Cooling fin integrated direct water-cooled structure and 6-in-1 configuration contribute to minimize the automobile inverter
- DLB*1 structure realizes high reliability
- Installation of the 7th generation IGBT adapting the CSTBT™*2 structure realizes a further reduction in loss
- On-chip current sensor that enables high-speed current-cutoff protection is installed

Matrix of 650V Power Modules (No. : Number of outline drawing, please refer to page 30)

V_{CES}(V)	650V					
Series	J1 Series			J Series		
I_C(A)	Power Module with pin fin	Connection	No.	T-PM	Connection	No.
300	CT300CJ1A060★★	C	01	CT300DJG060★★	D	02
600	CT600CJ1A060	C	01	CT600DJH060★★	D	03
1000	CT1000CJ1B060★★	C	04	-	-	-
Connection	C 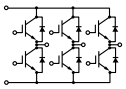 D					

★★ Under Development

Matrix of 1200V Power Modules

(No. : Number of Outline Drawing, please refer to page 30)

V_{CES}(V)	1200V		
Series	J1 Series		
I_C(A)	Power Module with pin fin	Connection	No.
600	CT600CJ1B120★★	C	04
Connection	C 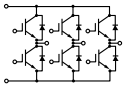		

★★ Under Development

Type Name Definition of Power Modules for Electric and Hybrid Vehicles

CT 600 C J1B 120

- Voltage class
- Series name and structure
- Connection type
- Rating current class
- CT: IGBT

Outline Drawing of Power Modules for Electric and Hybrid Vehicles

Unit:mm

01 CT300CJ1A060 CT600CJ1A060

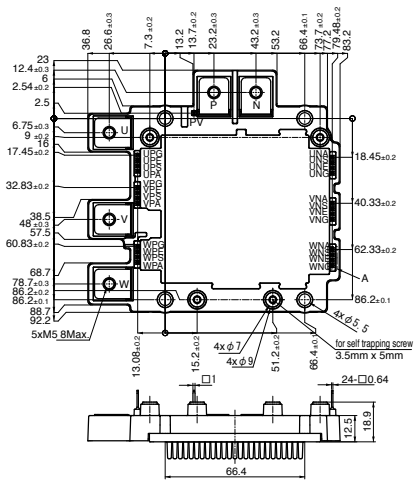

02 CT300DJG060

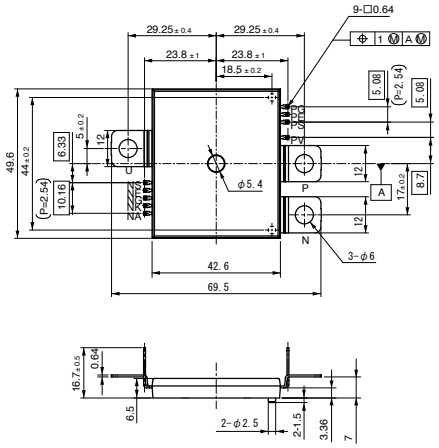

03 CT600DJH060

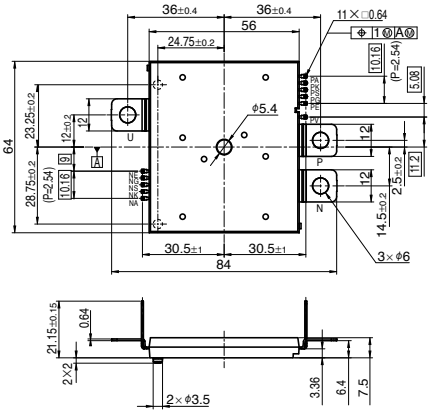

04 CT1000CJ1B060 CT600CJ1B120

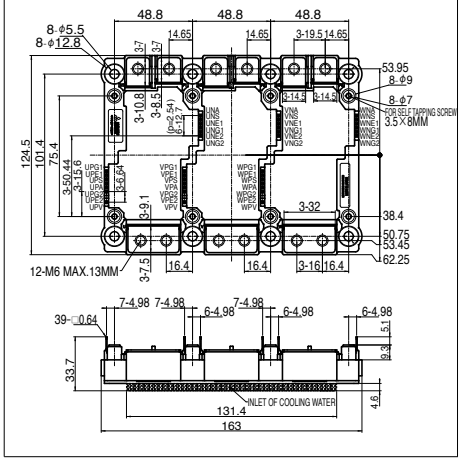

Please visit our website for further details.

www.MitsubishiElectric.com

Keep safety first in your circuit designs!

- Mitsubishi Electric Corporation puts the maximum effort into making semiconductor products better and more reliable, but there is always the possibility that trouble may occur with them. Trouble with semiconductors may lead to personal injury, fire or property damage. Remember to give due consideration to safety when making your circuit designs, with appropriate measures such as (i) placement of substitutive, auxiliary circuits, (ii) use of non-flammable material or (iii) prevention against any malfunction or mishap.

Notes regarding these materials

- These materials are intended as a reference to assist our customers in the selection of the Mitsubishi semiconductor product best suited to the customer's application; they do not convey any license under any intellectual property rights, or any other rights, belonging to Mitsubishi Electric Corporation or a third party.
- Mitsubishi Electric Corporation assumes no responsibility for any damage, or infringement of any third-party's rights, originating in the use of any product data, diagrams, charts, programs, algorithms, or circuit application examples contained in these materials.
- All information contained in these materials, including product data, diagrams, charts, programs and algorithms represents information on products at the time of publication of these materials, and are subject to change by Mitsubishi Electric Corporation without notice due to product improvements or other reasons. It is therefore recommended that customers contact Mitsubishi Electric Corporation or an authorized Mitsubishi Semiconductor product distributor for the latest product information before purchasing a product listed herein.
  The information described here may contain technical inaccuracies or typographical errors. Mitsubishi Electric Corporation assumes no responsibility for any damage, liability, or other loss rising from these inaccuracies or errors.
  Please also pay attention to information published by Mitsubishi Electric Corporation by various means, including the Mitsubishi Electric Semiconductor home page (http://www.MitsubishiElectric.com/semiconductors/).
- When using any or all of the information contained in these materials, including product data, diagrams, charts, programs, and algorithms, please be sure to evaluate all information as a total system before making a final decision on the applicability of the information and products. Mitsubishi Electric Corporation assumes no responsibility for any damage, liability or other loss resulting from the information contained herein.
- Mitsubishi Electric Corporation semiconductors are not designed or manufactured for use in a device or system that is used under circumstances in which human life is potentially at stake. Please contact Mitsubishi Electric Corporation or an authorized Mitsubishi Semiconductor product distributor when considering the use of a product contained herein for any specific purposes, such as apparatus or systems for transportation, vehicular, medical, aerospace, nuclear, or undersea repeater use.
- The prior written approval of Mitsubishi Electric Corporation is necessary to reprint or reproduce in whole or in part these materials.
- If these products or technologies are subject to the Japanese export control restrictions, they must be exported under a license from the Japanese government and cannot be imported into a country other than the approved destination.
  Any diversion or reexport contrary to the export control laws and regulations of Japan and/or the country of destination is prohibited.
- Please contact Mitsubishi Electric Corporation or an authorized Mitsubishi Semiconductor product distributor for further details on these materials or the products contained therein.

eco Changes **for a greener tomorrow**

Eco Changes is the Mitsubishi Electric Group's environmental statement, and expresses the Group's stance on environmental management. Through a wide range of businesses, we are helping contribute to the realization of a sustainable society.

MITSUBISHI ELECTRIC CORPORATION
HEAD OFFICE: TOKYO BLDG., 2-7-3, MARUNOUCHI, CHIYODA-KU, TOKYO 100-8310, JAPAN
www.MitsubishiElectric.com

Revised publication, effective Apr. 2017.
Superseding publication of H-CT575-X Apr. 2016.
Specifications subject to change without notice.

©2017 Mitsubishi Electric Corporation

H-CT575-Y FU-1704 Printed in Japan <IP>

POWEREX®
Power Semiconductor Solutions

2015 Product Catalog

EXPERTISE ■ INNOVATION ■ RELIABILITY

- IGBTs
- Hybrid & SiC Modules
- MOSFET Modules
- IPMs
- DIPIPM™
- Discrete Thyristors
- Discrete Rectifiers
- Thyristor & Diode Modules

- Fast Recovery & Diode Modules
- Assemblies
- IGBT Assemblies
- Custom Modules
- Gate Drivers & IPM Interface
- DC-DC Converters

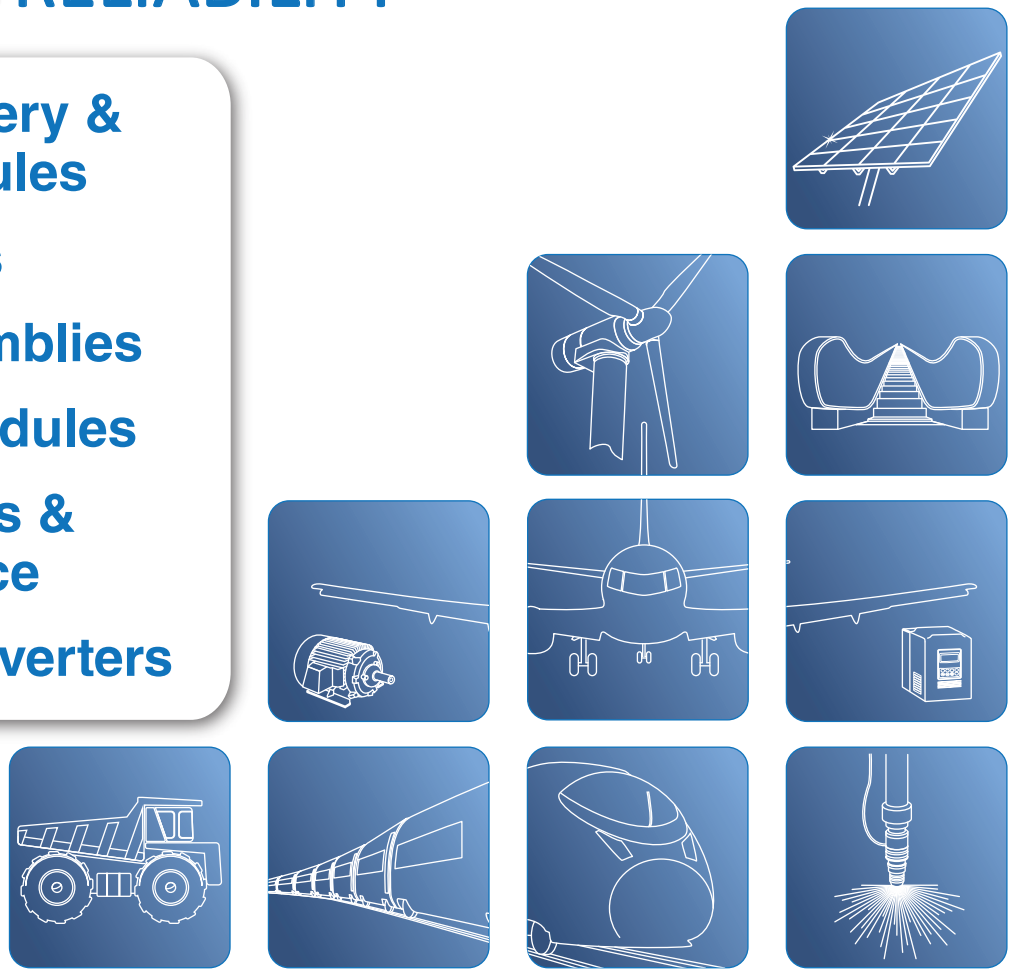

IGBTs

Applications Include:

- Hybrid Electric Vehicles (HEV/EV)
- Inverters
- Medical Power Supplies
- Motor Drives
- Servo Drives
- Traction Inverters
- UPS
- Welding

Circuit Configurations:

- Single
- Chopper
- Dual
- H-Bridge
- 6-Pac
- 7-Pac
- CIB

Development Kits available for some types. (Section M, Gate Drivers)

TABLE OF CONTENTS

Numbering System A-2
250V IGBTs A-2
600V Standard Frequency IGBTs, Up to 20kHz
NF-Series Dual A-3
NF-Series 6-Pac A-4
NX-Series 7-Pac A-5
Dual Extended Temperature Range IGBTs A-6
Single & Low Side Chopper A-7
600V High Frequency IGBTs, 30kHz to 70kHz A-8
1200V Standard Frequency IGBTs, Up to 20kHz
A-Series Single & Dual A-9
S-Series Dual & AC Switch, MPD S-Series & NF-Series Dual A-10
NF-Series 6-Pac & 7-Pac A-11
NX-Series Dual A-12
Single & Dual Extended Temperature Range IGBTs A-13
NX-Series Chopper & 6-Pac A-14
NX-Series 7-Pac A-15
1200V High Frequency IGBTs, 30kHz to 70kHz A-16
1700V IGBTs
A-Series Single & Dual, S-Series Dual A-17
MPD S-Series Dual & MPD NF-Series Chopper A-18
NX-Series Dual & Chopper A-19
NX-Series 7-Pac A-20
1700V HVIGBTs A-21
2500V HVIGBTs A-22
3300V HVIGBTs A-23
4500V HVIGBTs A-24
6500V HVIGBTs A-25
Outline Drawings A-26

VOLTAGE: 250V TO 6500V
CURRENT: 35A TO 2500A

250 Volt IGBTs, (Refer to device datasheets at www.pwrx.com for test conditions.)

CM200TU-5F

CM600HA-5F

MAXIMUM RATINGS (IGBT Inverter Sector)					ELECTRICAL CHARACTERISTICS										
					Static				Dynamic						
					Test Conditions		Typ.	Max.	V_{GE} = 0V, V_{CE} = 10V			Inductive Load Switching Times			
Type	V_{CES} Volts	I_C Amperes	I_{CM} Amperes	V_{RMS} Isolation Volts	I_C Amperes	V_{GE} Volts	$V_{CE(SAT)}$ Volts	$V_{CE(SAT)}$ Volts	C_{ies} nF	C_{oes} nF	C_{res} nF	$t_{d(on)}$ ns	t_r ns	$t_{d(off)}$ ns	t_f ns
250V Single IGBT															
CM600HA-5F	250	600	1200	2500	600	10	1.2	1.7	165	7.5	5.6	1000	4000	1000	500
250V 6-Pac IGBT															
CM200TU-5F	250	200	400	2500	200	10	1.2	1.7	66	3.0	2.3	700	1800	700	500

	FREE WHEEL DIODE			THERMAL CHARACTERISTICS					
Type	I_{FM} Amperes	V_{FM} Volts	t_{rr} ns	Interface Per Module $R_{th(j-c)}$ °C/W	IGBT (Max.) $R_{th(j-c)}$ °C/W	Diode (Max.) $R_{th(j-c)}$ °C/W	Weight Grams	Outline Drawings Number	Page
250V Single IGBT									
CM600HA-5F	600	2.0	300	0.04	0.13	0.19	400	2	A-26
250V 6-Pac IGBT									
CM200TU-5F	200	2.0	300	0.09	0.21	0.47	680	3	A-26

250V Single IGBT

CM600HA-5F

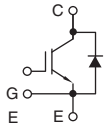

250V 6-Pac IGBT

CM200TU-5F

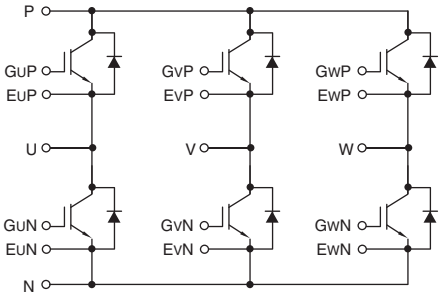

Numbering System

CM450DX-24S1 is a 450 Ampere, 1200 Volt, Dual IGBT

CM 450 D X – 24 S1

(1) (2) (3) (4) (5) (6)

(1) CM = IGBT Module

(2) Current Rating: I_C (Amperes)

(3) B = Four-in-One
D = Dual
E = Chopper
H = Single
M = CIB
R = Seven-in-One
T = Six

(4) Outline or Minor Change

(5) Voltage, V_{CES} Volts (x50)

(6) A = A-Series IGBT
F = 4th Generation Trench Gate
H = Total Performance H-Series Module
NF = 5th Generation CSTBT™ Trench Gate, Total Performance NF-Series Module
NFH = Total Performance NFH-Series Module, for High Frequency Use 30kHz to 70kHz
R = High Voltage, Low Loss
S = 6th Generation CSTBT™ Trench Gate
S1 = Gen. 6.1 CSTBT Trench Gate

CSTBT is a registered trademark of Mitsubishi Electric Corp.

600V Standard Frequency Application IGBTs, Up to 20kHz

NF-Series Dual IGBTs, (Refer to device datasheets at www.pwrx.com for test conditions.)

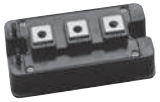

CM150DY-12NF, CM200DY-12NF, CM300DY-12NF

CM400DY-12NF

CM600DY-12NF

MAXIMUM RATINGS (IGBT Inverter Sector)						ELECTRICAL CHARACTERISTICS											FREE-WHEEL DIODE			THERMAL CHARACTERISTICS						
						Static				Dynamic																
						Test Conditions		Typ.	Max.	V_{GE} = 0V, V_{CE} = 10V			Inductive Load Switching Times							IGBT (Max.)	Diode (Max.)	IGBT Under Chip (Max.)	Contact Thermal Resistance			
Type	V_{CES} Volts	I_C@T_C' Amperes	I_{CM} Amperes	T_C' °C	V_{RMS} Isolation Volts	I_C Amperes	V_{GE} Volts	$V_{CE(SAT)}$ Volts	$V_{CE(SAT)}$ Volts	C_{ies} nF	C_{oes} nF	C_{res} nF	$t_{d(on)}$ ns	t_r ns	$t_{d(off)}$ ns	t_f ns	I_{FM} Amperes	V_{FM} Volts	t_{rr} ns	$R_{th(j-c)}$ °C/W	$R_{th(j-c)}$ °C/W	$R_{th(j-c)}$ °C/W	$R_{th(c-f)}$ °C/W	Weight Grams	Outline Drawings Number	Page
NF-Series Dual IGBTs																										
CM150DY-12NF	600	150	300	97	2500	150	15	1.7	2.2	23	2.8	0.9	120	100	300	300	150	2.6	150	0.21	0.47	0.16	0.07	310	5	A-27
CM200DY-12NF	600	200	400	93	2500	200	15	1.7	2.2	30	3.7	1.2	120	120	300	300	200	2.6	150	0.19	0.35	0.13	0.07	310	5	A-27
CM300DY-12NF	600	300	600	89	2500	300	15	1.7	2.2	45	5.5	1.8	120	120	350	300	300	2.6	150	0.16	0.25	0.093	0.07	310	5	A-27
CM400DY-12NF	600	400	800	92	2500	400	15	1.7	2.2	60	7.3	2.4	300	200	450	300	400	2.6	250	0.11	0.19	0.066	0.04	400	6	A-27
CM600DY-12NF	600	600	1200	89	2500	600	15	1.7	2.2	90	11.0	3.6	500	300	750	300	600	2.6	250	0.11	0.18	0.046	0.02	580	7	A-28

NF-Series Dual IGBTs

CM150DY-12NF, CM200DY-12NF, CM300DY-12NF, CM400DY-12NF, CM600DY-12NF

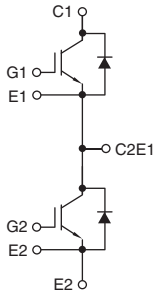

600V Standard Frequency Application IGBTs, Up to 20kHz

NF-Series 6-Pac IGBTs, (Refer to device datasheets at www.pwrx.com for test conditions.)

CM75TL-12NF,
CM150TL-12NF

MAXIMUM RATINGS						ELECTRICAL CHARACTERISTICS											FREE-WHEEL DIODE		
Inverter Sector						Static				Dynamic									
						Test Conditions		Typ.	Max.	V_{GE} = 0V, V_{CE} = 10V			Inductive Load Switching Times						
Type	V_{CES} Volts	I_C@T_C' Amperes	I_{CM} Amperes	T_C' °C	V_{RMS} Isolation Volts	I_C Amperes	V_{GE} Volts	$V_{CE(SAT)}$ Volts	$V_{CE(SAT)}$ Volts	C_{ies} nF	C_{oes} nF	C_{res} nF	$t_{d(on)}$ ns	t_r ns	$t_{d(off)}$ ns	t_f ns	I_{FM} Amperes	V_{FM} Volts	t_{rr} ns
6-Pac IGBTs																			
CM75TL-12NF	600	75	150	102	2500	75	15	1.7	2.2	11.3	1.4	0.45	120	100	300	300	75	2.8	100
CM150TL-12NF	600	150	300	93	2500	150	15	1.7	2.2	23.0	2.8	0.9	120	100	300	300	150	2.8	150

THERMAL CHARACTERISTICS						
Inverter Sector						
Type	IGBT Under Chip (Max.) $R_{th(j-c)}$ °C/W	Diode Under Chip (Max.) $R_{th(j-c)}$ °C/W	Contact Thermal Resistance $R_{th(c-f)}$ °C/W	Weight Grams	Outline Drawings Number	Page
6-Pac IGBTs						
CM75TL-12NF	0.29	0.51	0.085	350	1	A-26
CM150TL-12NF	0.17	0.31	0.085	350	1	A-26

6-Pac IGBTs

CM75TL-12NF, CM150TL-12NF

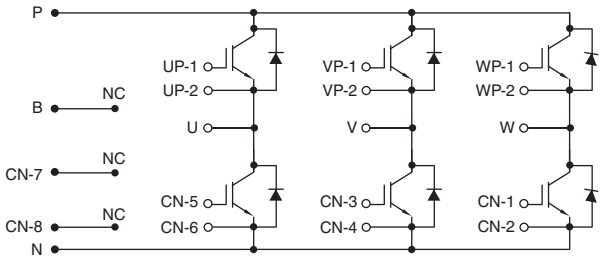

600V Standard Frequency Application IGBTs, Up to 20kHz

NX-Series 7-Pac IGBTs, (Refer to device datasheets at www.pwrx.com for test conditions.)

CM100RX-12A, CM150RX-12A,
CM200RX-12A

MAXIMUM RATINGS											ELECTRICAL CHARACTERISTICS													FREE-WHEEL DIODE		
	Inverter Sector					Brake Sector					Static				Dynamic											
											Test Conditions		Typ.	Max.	V_{GE} = 0V, V_{CE} = 10V			Inductive Load Switching Times								
Type	V_{CES} Volts	I_C@T_C' Amperes	I_{CM} Amperes	T_C' °C	V_{RMS} Isolation Volts	V_{CES} Volts	I_C@T_C' Amperes	I_{CM}@T_C' Amperes	T_C' °C	P_d Watts	I_C Amperes	V_{GE} Volts	$V_{CE(SAT)}$ Volts	$V_{CE(SAT)}$ Volts	C_{ies} nF	C_{oes} nF	C_{res} nF	$t_{d(on)}$ ns	t_r ns	$t_{d(off)}$ ns	t_f ns	I_{FM} Amperes	V_{FM} Volts	t_{rr} ns
7-Pac IGBTs																										
CM100RX-12A	600	100	200	84	2500	600	50	100	103	280	100	15	1.7	2.1	11.3	1.4	0.45	100	100	300	400	100	2.8	200
CM150RX-12A	600	150	300	78	2500	600	75	150	84	280	150	15	1.6	2.0	15.0	2.0	0.6	120	100	350	550	150	2.8	200
CM200RX-12A	600	200	400	82	2500	600	100	200	88	400	200	15	1.6	2.0	20.0	2.7	0.8	120	150	350	550	200	2.8	200

THERMAL CHARACTERISTICS						Weight	Outline Drawings	
	Inverter Sector		Brake Sector		Contact Thermal Resistance			
Type	IGBT Under Chip (Max.) $R_{th(j-c)}$ °C/W	Diode Under Chip (Max.) $R_{th(j-c)}$ °C/W	IGBT Under Chip (Max.) $R_{th(j-c)}$ °C/W	Diode Under Chip (Max.) $R_{th(j-c)}$ °C/W	$R_{th(c-f)}$ °C/W	Grams	Number	Page
7-Pac IGBTs								
CM100RX-12A	0.31	0.59	0.44	0.85	—	350	11	A-29
CM150RX-12A	0.24	0.46	0.44	0.85	—	350	11	A-29
CM200RX-12A	0.17	0.33	0.31	0.59	—	350	11	A-29

7-Pac IGBTs

CM100RX-12A, CM150RX-12A, CM200RX-12A

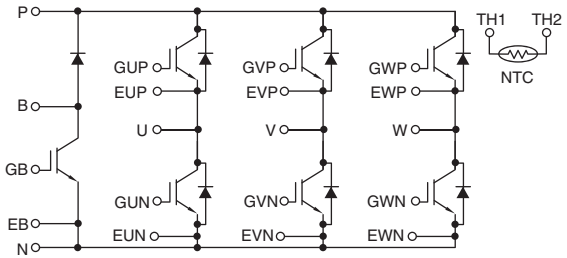

600V Standard Frequency Application IGBTs, Up to 20kHz

Dual Extended Temperature Range IGBTs, (Refer to device datasheets at www.pwrx.com for test conditions.)

QID0640020

QID0660023

MAXIMUM RATINGS						ELECTRICAL CHARACTERISTICS												FREE-WHEEL DIODE			THERMAL CHARACTERISTICS				
						Static Test Conditions		T_j = 25°C		Dynamic															
										V_{GE} = 0V, f = 1KHz				Resistive Load Switching Times											
Type	V_{CES} Volts	I_C Amperes	I_{CM} Amperes	$T_{j(MAX)}$ °C	V_{RMS} Isolation Volts	I_C Amperes	V_{GE} Volts	Typ. $V_{CE\ (SAT)}$ Volts	Max. $V_{CE\ (SAT)}$ Volts	V_{CE} Test Cond.	C_{ies} nF	C_{oes} nF	C_{res} nF	$t_{d(on)}$ ns	t_r ns	$t_{d(off)}$ ns	t_r ns	I_{FM} Amperes	V_{FM} Volts	t_{rr} ns	IGBT (Max.) $R_{th(j-c)}$ °C/W	Diode (Max.) $R_{th(j-c)}$ °C/W	Weight Grams	Outline Drawings Number	Page
Dual Extended Temperature Range IGBTs																									
QID0640020	600	400	800	150	2500	400	15	1.7	2.1	10	50	5.3	1.6	200	200	400	600	—	—	200	0.112	0.192	220	10	A-29
QID0660023	600	600	1200	150	2500	600	15	1.7	2.2	10	90	11.0	3.6	500	300	750	300	—	—	250	0.075	0.120	270	48	A-43

Dual Extended Temperature Range IGBTs

QID0640020

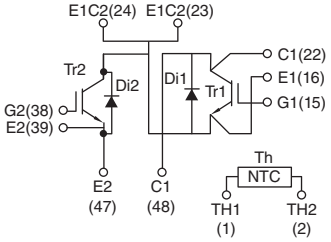

QID0660023

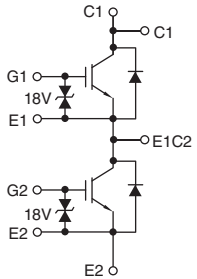

600V Standard Frequency Application IGBTs, Up to 20kHz

Single and Low Side Chopper IGBTs, (Refer to device datasheets at www.pwrx.com for test conditions.)

QIS0660004

QIQ0645001

MAXIMUM RATINGS						ELECTRICAL CHARACTERISTICS												FREE-WHEEL DIODE			THERMAL CHARACTERISTICS				
						Static Test Conditions		$T_j = 25°C$		Dynamic															
								Typ.	Max.	V_{GE} = 0V, f = 1KHz				Resistive Load Switching Times							IGBT (Max.)	Diode (Max.)			
Type	V_{CES} Volts	I_C Amperes	I_{CM} Amperes	$T_{j(MAX)}$ °C	V_{RMS} Isolation Volts	I_C Amperes	V_{GE} Volts	$V_{CE(SAT)}$ Volts	$V_{CE(SAT)}$ Volts	V_{CE} Test Cond.	C_{ies} nF	C_{oes} nF	C_{res} nF	$t_{d(on)}$ ns	t_r ns	$t_{d(off)}$ ns	t_f ns	I_{FM} Amperes	V_{FM} Volts	t_{rr} ns	$R_{th(j-c)}$ °C/W	$R_{th(j-c)}$ °C/W	Weight Grams	Outline Drawings Number	Page
Single IGBT																									
QIS0660004	600	600	1200	150	2500	600	15	1.7	2.1	10	69	8.0	2.4	700	250	700	600	—	—	300	0.079	0.132	220	10	A-29
Low Side Chopper IGBT																									
QIQ0645001	600	450	900	125	2000	450	15	2.1	2.8	10	45	15.9	9	350	600	350	300	450	2.2	110	0.075	0.075	400	49	A-43

Single IGBT

QIS0660004

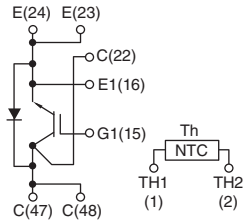

Low Side Chopper

QIQ0645001

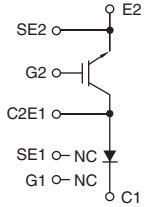

600V High Frequency Application IGBTs, 30kHz to 70kHz
NFH-Series Dual & Chopper IGBTs, (Refer to device datasheets at www.pwrx.com for test conditions.)

CM100DUS-12F, CM150DUS-12F, CM200DU-12NFH

CM300DU-12NFH, CM400DU-12NFH, CM600E3U-12NFH

CM600DU-12NFH

MAXIMUM RATINGS (IGBT Inverter Sector)					ELECTRICAL CHARACTERISTICS											FREE WHEEL DIODE			THERMAL CHARACTERISTICS					
					Static				Dynamic															
					Test Conditions		Typ.	Max.	V_{GE} = 0V, V_{CE} = 10V			Inductive Load Switching Times							IGBT (Max.)	Diode (Max.)	IGBT Under Chip (Max.)			
Type	V_{CES} Volts	I_C Amperes	I_{CM} Amperes	V_{RMS} Isolation Volts	I_C Amperes	V_{GE} Volts	$V_{CE(SAT)}$ Volts	$V_{CE(SAT)}$ Volts	C_{ies} nF	C_{oes} nF	C_{res} nF	$t_{d(on)}$ ns	t_r ns	$t_{d(off)}$ ns	t_f ns	I_{FM} Amperes	V_{FM} Volts	t_{rr} ns	$R_{th(j-c)}$ °C/W	$R_{th(j-c)}$ °C/W	$R_{th(j-c)}$ °C/W	Weight Grams	Outline Drawings Number	Page
NFH-Series Dual IGBTs																								
CM100DUS-12F	600	100	200	2500	100	15	2.0	2.7	27	1.8	1.0	100	80	300	150	100	2.6	150	0.35	0.70	0.23	310	8	A-28
CM150DUS-12F	600	150	300	2500	150	15	2.0	2.7	41	2.7	1.5	120	100	350	150	150	2.6	150	0.24	0.47	0.19	310	8	A-28
CM200DU-12NFH	600	200	400	2500	200	15	2.0	2.7	55	3.6	2.0	120	100	350	150	200	2.6	150	0.21	0.35	0.15	310	18	A-32
CM300DU-12NFH	600	300	600	2500	300	15	2.0	2.7	83	5.4	3.0	250	120	500	150	300	2.6	200	0.16	0.24	0.10	400	19	A-32
CM400DU-12NFH	600	400	800	2500	400	15	2.0	2.7	110	7.2	4.0	400	120	700	150	400	2.6	200	0.13	0.18	0.076	400	19	A-32
CM600DU-12NFH	600	600	1200	2500	600	15	2.0	2.7	166	11.0	6.0	700	300	1400	150	600	2.6	200	0.11	0.12	0.053	400	24	A-34
NFH-Series Chopper IGBT																								
CM600E3U-12NFH	600	600	1200	2500	600	15	2.0	2.7	165	10.8	6.0	—	—	—	150	600	2.6	—	0.088	—	0.051	400	19	A-32

NFH-Series Dual IGBTs

CM100DUS-12F, CM150DUS-12F

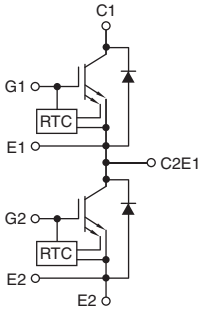

CM200DU-12NFH, CM300DU-12NFH, CM400DU-12NFH, CM600DU-12NFH

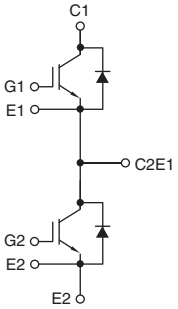

NFH-Series Chopper IGBT

CM600E3U-12NFH

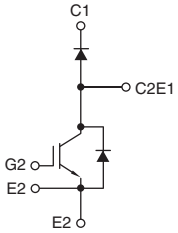

1200V Standard Frequency Application IGBTs, Up to 20kHz

A-Series Single & Dual IGBTs, (Refer to device datasheets at www.pwrx.com for test conditions.)

CM400HA-24A, CM600HA-24A

CM100DY-24A

CM600DY-24A

MAXIMUM RATINGS (IGBT Inverter Sector)						ELECTRICAL CHARACTERISTICS											FREE-WHEEL DIODE			THERMAL CHARACTERISTICS					
						Static				Dynamic										IGBT Under Chip (Max.)	Diode Under Chip (Max.)	Contact Thermal Resistance			
						Test Conditions		Typ.	Max.	V_{GE} = 0V, V_{CE} = 10V			Inductive Load Switching Times												
Type	V_{CES} Volts	I_C@T_C' Amperes	I_{CM} Amperes	T_C' °C	V_{RMS} Isolation Volts	I_C Amperes	V_{GE} Volts	$V_{CE(SAT)}$ Volts	$V_{CE(SAT)}$ Volts	C_{ies} nF	C_{oes} nF	C_{res} nF	$t_{d(on)}$ ns	t_r ns	$t_{d(off)}$ ns	t_f ns	I_{FM} Amperes	V_{FM} Volts	t_{rr} ns	$R_{th(j-c)}$ °C/W	$R_{th(j-c)}$ °C/W	$R_{th(c-f)}$ °C/W	Weight Grams	Outline Drawings Number	Page
A-Series Single IGBTs																									
CM400HA-24A	1200	400	800	87	2500	400	15	2.1	3.0	70.0	6.0	1.4	550	180	600	350	400	3.8	250	0.053	0.080	0.02	480	29	A-36
CM600HA-24A	1200	600	1200	80	2500	600	15	2.1	3.0	105.0	9.0	2.0	660	190	700	350	600	3.8	250	0.034	0.053	0.02	480	29	A-36
A-Series Dual IGBTs																									
CM100DY-24A	1200	100	200	84	2500	100	15	2.1	3.0	17.5	1.5	0.34	100	70	400	350	100	3.8	150	0.186	0.34	0.022	310	20	A-33
CM600DY-24A	1200	600	1200	80	2500	600	15	2.1	3.0	94.0	8.0	1.8	660	190	700	350	600	3.8	250	0.034	0.062	0.018	580	22	A-33

A-Series Single IGBTs

CM400HA-24A, CM600HA-24A

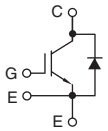

A-Series Dual IGBTs

CM100DY-24A, CM600DY-24A

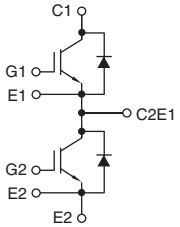

1200V Standard Frequency Application IGBTs, Up to 20kHz
S-Series Dual & AC Switch, MPD S-Series & NF-Series Dual IGBTs, (Refer to device datasheets at www.pwrx.com for test conditions.)

CM300DY-24S

CM400C1Y-24S, CM450DY-24S, CM600DY-24S

CM800DY-24S

CM900DUC-24S, CM1400DUC-24S

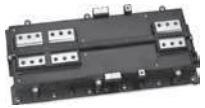
CM2500DY-24S

CM100DY-24NF

MAXIMUM RATINGS (IGBT Inverter Sector)						ELECTRICAL CHARACTERISTICS											FREE-WHEEL DIODE			THERMAL CHARACTERISTICS						
						Static				Dynamic																
						Test Conditions		Typ.	Max.	V_{GE} = 0V, V_{CE} = 10V			Inductive Load Switching Times							IGBT (Max.)	Diode (Max.)	IGBT Under Chip (Max.)	Contact Thermal Resistance			
Type	V_{CES} Volts	I_C@T_C' Amperes	I_{CM} Amperes	T_C' °C	V_{RMS} Isolation Volts	I_C Amperes	V_{GE} Volts	$V_{CE(SAT)}$ Volts	$V_{CE(SAT)}$ Volts	C_{ies} nF	C_{oes} nF	C_{res} nF	$t_{d(on)}$ ns	t_r ns	$t_{d(off)}$ ns	t_f ns	I_{FM} Amperes	V_{FM} Volts	t_{rr} ns	$R_{th(j-c)}$ °C/W	$R_{th(j-c)}$ °C/W	$R_{th(j-c)}$ °C/W	$R_{th(c-f)}$ °C/W	Weight Grams	Outline Drawings Number	Page
S-Series Dual IGBTs																										
CM300DY-24S	1200	300	600	120	2500	300	15	1.7	2.15	30	6	0.5	800	200	600	300	300	2.25	300	0.066	0.12	—	0.02	400	6	A-27
CM450DY-24S	1200	450	900	125	2500	450	15	1.7	2.15	45	9	0.75	800	200	600	300	450	2.15	300	0.045	0.068	—	0.018	580	16	A-31
CM600DY-24S	1200	600	1200	116	2500	600	15	1.7	2.15	60	12	1.0	800	200	600	300	600	2.15	300	0.03	0.06	—	0.018	580	16	A-31
CM800DY-24S	1200	800	1600	117	2500	800	15	1.7	2.15	80	16	1.32	800	200	600	300	800	2.15	300	0.028	0.045	—	0.015	1200	25	A-34
S-Series Dual AC Switch																										
CM400C1Y-24S	1200	350	800	124	2500	400	15	1.85	2.3	40	8	0.66	800	200	600	300	400	1.7	300	0.056	0.95	—	0.018	580	4	A-27
MPD S-Series Dual IGBTs																										
CM900DUC-24S	1200	900	1800	125	2500	900	15	1.55	1.9	90	18.0	1.5	900	250	950	350	900	1.65	450	0.023	0.039	—	0.006	1450	23	A-34
CM1400DUC-24S	1200	1400	2800	124	2500	1400	15	1.55	1.9	150	30.0	2.5	900	250	950	350	1400	1.65	450	0.016	0.026	—	0.006	1450	23	A-34
CM2500DY-24S	1200	2500	5000	56	2500	2500	15	1.7	2.4	250	25.0	3.0	800	200	700	300	—	—	300	0.016	0.027	—	0.0038	2000	38	A-39
NF-Series Dual IGBT																										
CM100DY-24NF	1200	100	200	113	2500	100	15	1.8	2.5	23	2.0	0.45	120	80	450	350	100	3.2	150	0.19	0.35	0.13	0.07	310	5	A-27

S-Series Dual IGBTs

CM300DY-24S, CM450DY-24S, CM600DY-24S, CM800DY-24S

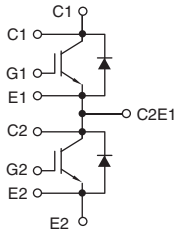

S-Series Dual AC Switch IGBT

CM400C1Y-24S

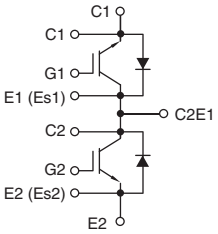

MPD S-Series Dual IGBTs

CM900DUC-24S

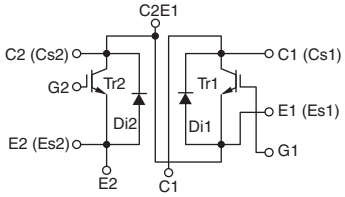

CM1400DUC-24S

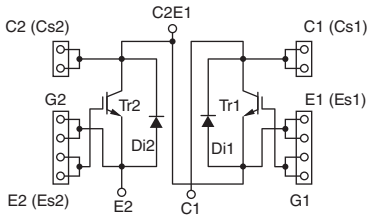

CM2500DY-24S

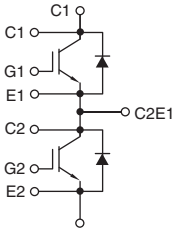

NF-Series Dual IGBT

CM100DY-24NF

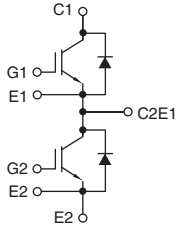

1200V Standard Frequency Application IGBTs, Up to 20kHz

NF-Series 6-Pac & 7-Pac IGBTs, (Refer to device datasheets at www.pwrx.com for test conditions.)

CM50RL-24NF,
CM50TL-24NF

MAXIMUM RATINGS											ELECTRICAL CHARACTERISTICS												FREE-WHEEL DIODE		
	Inverter Sector					Brake Sector					Static				Dynamic										
											Test Conditions		Typ.	Max.	V_{GE} = 0V, V_{CE} = 10V			Inductive Load Switching Times							
Type	V_{CES} Volts	I_C@T_C' Amperes	I_{CM} Amperes	T_C' °C	V_{RMS} Isolation Volts	V_{CES} Volts	I_C@T_C' Amperes	I_{CM}@T_C' Amperes	T_C' °C	P_d Watts	I_C Amperes	V_{GE} Volts	$V_{CE(SAT)}$ Volts	$V_{CE(SAT)}$ Volts	C_{ies} nF	C_{oes} nF	C_{res} nF	$t_{d(on)}$ ns	t_r ns	$t_{d(off)}$ ns	t_f ns	I_{FM} Amperes	V_{FM} Volts	t_{rr} ns
6-Pac IGBT																									
CM50TL-24NF	1200	50	100	94	2500	—	—	—	—	—	50	15	2.1	3.0	8.5	0.75	0.17	100	50	300	350	50	3.8	100	
7-Pac IGBT																									
CM50RL-24NF	1200	50	100	94	2500	1200	30	60	104	290	50	15	2.1	3.0	8.5	0.75	0.17	100	50	300	350	50	3.8	100	

THERMAL CHARACTERISTICS								
	Inverter Sector		Brake Sector					
Type	IGBT Under Chip (Max.) $R_{th(j-c)}$ °C/W	Diode Under Chip (Max.) $R_{th(j-c)}$ °C/W	IGBT Under Chip (Max.) $R_{th(j-c)}$ °C/W	Diode Under Chip (Max.) $R_{th(j-c)}$ °C/W	Contact Thermal Resistance $R_{th(c-f)}$ °C/W	Weight Grams	Outline Drawings Number	Page
6-Pac IGBT								
CM50TL-24NF	0.32	0.43	—	—	0.085	350	1	A-26
7-Pac IGBT								
CM50RL-24NF	0.32	0.43	0.43	0.65	0.085	350	1	A-26

6-Pac IGBT

CM50TL-24NF

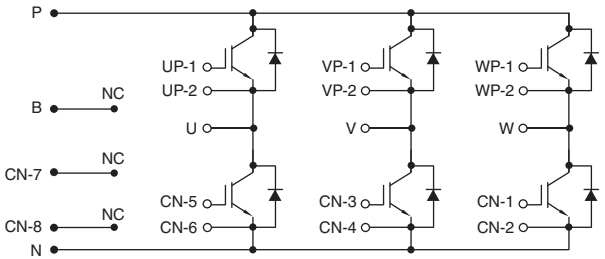

7-Pac IGBT

CM50RL-24NF

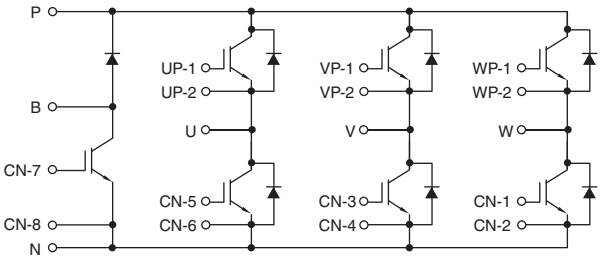

1200V Standard Frequency Application IGBTs, Up to 20kHz

NX-Series Dual IGBTs, (Refer to device datasheets at www.pwrx.com for test conditions.)

CM150DX-24S, QIS1260015

CM225DX-24S1, CM300DX-24S1, CM450DX-24S1, CM600DX-24S1

CM600DXL-24S, CM1000DXL-24S

MAXIMUM RATINGS							ELECTRICAL CHARACTERISTICS										FREE-WHEEL DIODE		
Inverter Sector							Static				Dynamic								
							Test Conditions		Typ.	Max.	Switching Energy		Inductive Load Switching Times						
Type	V_{CES} Volts	$I_C@T_C'$ Amperes	I_{CM} Amperes	T_C' °C	P_d Watts	V_{RMS} Isolation Volts	I_C Amperes	V_{GE} Volts	$V_{CE(SAT)}$ Volts	$V_{CE(SAT)}$ Volts	$E_{(on)}$ mJ	$E_{(off)}$ mJ	$t_{d(on)}$ ns	t_r ns	$t_{d(off)}$ ns	t_f ns	I_{FM} Amperes	V_{FM} Volts	E_{rr} mJ
NX-Series Dual IGBTs																			
CM150DX-24S	1200	150	300	120	1150	2500	150	15	1.7	2.15	24.2	16.0	800	200	600	300	150	2.15	12.2
CM225DX-24S1	1200	225	450	96	1250	4000	225	15	1.8	2.25	21.7	23.1	800	200	600	300	225	2.1	17.0
CM300DX-24S1	1200	300	600	107	1850	4000	300	15	1.7	2.15	30.7	35.7	800	200	600	300	300	2.0	19.0
CM450DX-24S1	1200	450	900	107	2775	4000	450	15	1.7	2.15	35.8	52.4	800	200	600	300	450	2.0	28.0
CM600DX-24S1	1200	600	1200	94	3330	4000	600	15	1.85	2.35	91.5	63.1	800	200	600	300	600	2.7	36.0
CM600DXL-24S	1200	600	1200	119	4545	2500	600	15	1.7	2.15	20.3	60.1	800	200	600	300	600	2.15	69.2
CM1000DXL-24S	1200	900	2000	124	7500	2500	1000	15	1.7	2.15	45.6	97.1	800	200	600	300	1000	2.15	96.7

THERMAL CHARACTERISTICS						
Inverter Sector						
Type	IGBT Under Chip (Max.) $R_{th(j-c)}$ °C/W	Diode Under Chip (Max.) $R_{th(j-c)}$ °C/W	Contact Thermal Resistance $R_{th(c-f)}$ °C/W	Weight Grams	Outline Drawings Number	Page
NX-Series Dual IGBTs						
CM150DX-24S	0.13	0.23	0.015	350	10	A-29
CM225DX-24S1	0.12	0.18	0.015	350	50	A-44
CM300DX-24S1	0.081	0.13	0.015	350	50	A-44
CM450DX-24S1	0.054	0.086	0.015	350	50	A-44
CM600DX-24S1	0.045	0.072	0.015	350	50	A-44
CM600DXL-24S	0.033	0.063	0.007	690	39	A-39
CM1000DXL-24S	0.02	0.038	0.007	690	39	A-39

NX-Series Dual IGBTs

CM150DX-24S

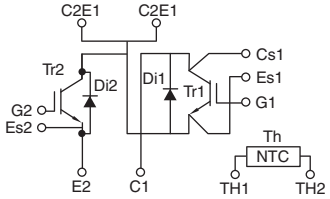

CM225DX-24S1, CM300DX-24S1, CM450DX-24S1, CM600DX-24S1

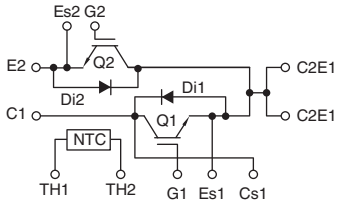

CM600DXL-24S, CM1000DXL-24S

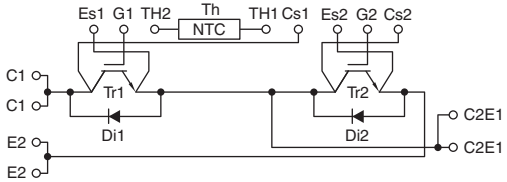

1200V Standard Frequency Application IGBTs, Up to 20kHz

Single & Dual Extended Temperature Range IGBTs, (Refer to device datasheets at www.pwrx.com for test conditions.)

QIS1260015,
QID1230015

MAXIMUM RATINGS						ELECTRICAL CHARACTERISTICS												FREE-WHEEL DIODE			THERMAL CHARACTERISTICS				
						Static Test Conditions		$T_j = 25°C$		Dynamic															
								Typ.	Max.	V_{GE} = 0V, f = 1KHz				Resistive Load Switching Times							IGBT (Max.)	Diode (Max.)			
Type	V_{CES} Volts	I_C Amperes	I_{CM} Amperes	$T_{j(MAX)}$ °C	V_{RMS} Isolation Volts	I_C Amperes	V_{GE} Volts	$V_{CE(SAT)}$ Volts	$V_{CE(SAT)}$ Volts	V_{CE} Test Cond.	C_{ies} nF	C_{oes} nF	C_{res} nF	$t_{d(on)}$ ns	t_r ns	$t_{d(off)}$ ns	t_f ns	I_{FM} Amperes	V_{FM} Volts	t_{rr} ns	$R_{th(j-c)}$ °C/W	$R_{th(j-c)}$ °C/W	Weight Grams	Outline Drawings Number	Page
Single Extended Temperature Range IGBT																									
QIS1260015	1200	600	1200	150	2500	600	20	2.0	2.6	10	100	9.0	2.0	660	190	700	600	—	—	—	0.033	0.028	330	10	A-29
Dual Extended Temperature Range IGBT																									
QID1230015	1200	300	600	150	2500	300	20	2.0	2.6	10	47	4.0	0.9	550	180	600	600	—	—	250	0.079	0.144	220	10	A-29

Single Extended Temperature Range IGBT

QIS1260015

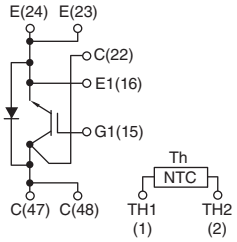

Dual Extended Temperature Range IGBT

QID1230015

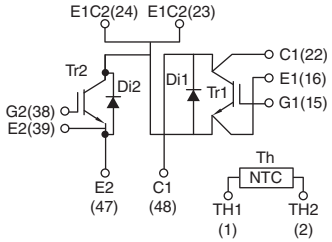

1200V Standard Frequency Application IGBTs, Up to 20kHz

NX-Series Chopper & 6-Pac IGBTs, (Refer to device datasheets at www.pwrx.com for test conditions.)

CM150EXS-24S,
CM200EXS-24S,
CM300EXS-24S

CM75TX-24S

MAXIMUM RATINGS							ELECTRICAL CHARACTERISTICS										FREE-WHEEL DIODE		
Inverter Sector							Static				Dynamic								
							Test Conditions		Typ.	Max.	Switching Energy		Inductive Load Switching Times						
Type	V_{CES} Volts	I_C@T_C' Amperes	I_{CM} Amperes	T_C' °C	P_d Watts	V_{RMS} Isolation Volts	I_C Amperes	V_{GE} Volts	$V_{CE(SAT)}$ Volts	$V_{CE(SAT)}$ Volts	$E_{(on)}$ mJ	$E_{(off)}$ mJ	$t_{d(on)}$ ns	t_r ns	$t_{d(off)}$ ns	t_f ns	I_{FM} Amperes	V_{FM} Volts	E_{rr} mJ
NX-Series Chopper IGBTs																			
CM150EXS-24S	1200	150	300	120	1150	2500	150	15	1.7	2.15	24.2	16.0	800	200	600	300	300	2.15	12.2
CM200EXS-24S	1200	200	400	119	1500	2500	200	15	1.7	2.15	30.7	21.5	800	200	600	300	400	2.25	14.2
CM300EXS-24S	1200	300	600	119	2270	2500	300	15	1.7	2.15	41.0	32.0	800	200	600	300	600	2.25	22.0
NX-Series 6-Pac IGBTs																			
CM75TX-24S	1200	75	150	122	600	2500	75	15	1.7	2.15	7.3	8.0	300	200	600	300	75	2.15	6.9
CM100TX-24S1	1200	100	200	107	625	4000	100	15	1.7	2.15	5.9	9.7	800	200	600	300	100	2.0	9.7
CM150TX-24S1	1200	150	300	107	935	4000	150	15	1.7	2.15	16.6	17.6	800	200	600	300	150	2.0	11.0

THERMAL CHARACTERISTICS						
Inverter Sector						
Type	IGBT Under Chip (Max.) $R_{th(j-c)}$ °C/W	Diode Under Chip (Max.) $R_{th(j-c)}$ °C/W	Contact Thermal Resistance $R_{th(c-f)}$ °C/W	Weight Grams	Outline Drawings Number	Page
NX-Series Chopper IGBTs						
CM150EXS-24S	0.13	0.23	0.025	210	43	A-41
CM200EXS-24S	0.10	0.19	0.025	210	43	A-41
CM300EXS-24S	0.066	0.12	0.025	210	43	A-41
NX-Series 6-Pac IGBTs						
CM75TX-24S	0.25	0.4	0.015	300	13	A-30
CM100TX-24S1	0.24	0.37	0.015	330	52	A-45
CM150TX-24S1	0.16	0.26	0.015	330	52	A-45

NX-Series Chopper IGBTs
CM150EXS-24S, CM200EXS-24S, CM300EXS-24S

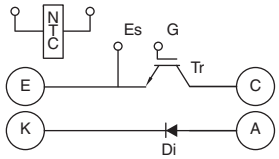

NX-Series 6-Pac IGBTs
CM75TX-24S, CM100TX-24S1, CM150TX-24S1

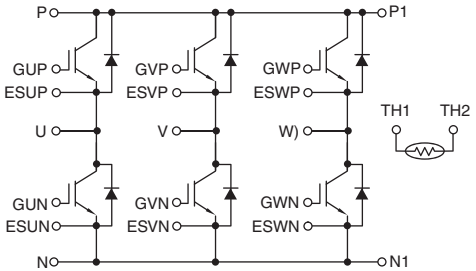

1200V Standard Frequency Application IGBTs, Up to 20kHz

NX-Series 7-Pac IGBTs, (Refer to device datasheets at www.pwrx.com for test conditions.)

CM75RX-24S,
CM100RX-24S1,
CM150RX-24S1

MAXIMUM RATINGS												ELECTRICAL CHARACTERISTICS										FREE-WHEEL DIODE		
Inverter Sector							Brake Sector					Static				Dynamic								
												Test Conditions		Typ.	Max.	Switching Energy		Inductive Load Switching Times						
Type	V_{CES} Volts	I_C@T_C' Amperes	I_{CM} Amperes	T_C' °C	P_d Watts	V_{RMS} Isolation Volts	V_{CES} Volts	I_C@T_C' Amperes	I_{CM}@T_C' Amperes	T_C' °C	P_d Watts	I_C Amperes	V_{GE} Volts	$V_{CE(SAT)}$ Volts	$V_{CE(SAT)}$ Volts	$E_{(on)}$ mJ	$E_{(off)}$ mJ	$t_{d(on)}$ ns	t_r ns	$t_{d(off)}$ ns	t_f ns	I_{FM} Amperes	V_{FM} Volts	E_{rr} mJ
NX-Series 7-Pac IGBTs																								
CM75RX-24S	1200	75	150	121	600	2500	1200	50	100	125	425	75	15	1.7	2.15	7.3	8.0	300	200	600	300	75	1.7	6.9
CM100RX-24S1	1200	100	200	107	625	4000	1200	50	100	113	340	100	15	1.7	2.15	5.9	9.7	300	200	600	300	100	2.0	9.7
CM150RX-24S1	1200	150	300	107	935	4000	1200	75	150	109	480	150	15	1.7	2.15	16.6	17.6	800	200	600	300	150	2.0	11.0

THERMAL CHARACTERISTICS								
	Inverter Sector		Brake Sector					
	IGBT Under Chip (Max.)	Diode Under Chip (Max.)	IGBT Under Chip (Max.)	Diode Under Chip (Max.)	Contact Thermal Resistance			
Type	$R_{th(j-c)}$ °C/W	$R_{th(j-c)}$ °C/W	$R_{th(j-c)}$ °C/W	$R_{th(j-c)}$ °C/W	$R_{th(c-f)}$ °C/W	Weight Grams	Outline Drawings Number	Page
NX-Series 7-Pac IGBTs								
CM75RX-24S	0.25	0.40	0.35	0.63	0.015	370	11	A-29
CM100RX-24S1	0.24	0.37	0.44	0.66	0.015	370	53	A-45
CM150RX-24S1	0.16	0.26	0.31	0.47	0.015	370	53	A-45

NX-Series 7-Pac IGBTs

CM75RX-24S, CM100RX-24S1, CM150RX-24S1

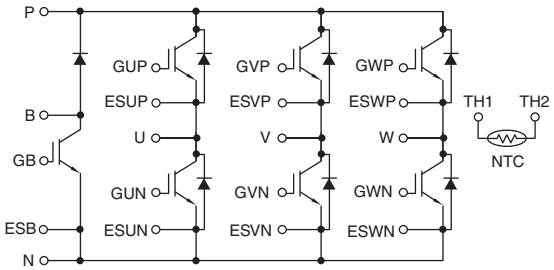

1200V High Frequency Application IGBTs, 30kHz to 70kHz

NFH-Series & NFJ-Series Dual & NFH-Series Chopper IGBTs, (Refer to device datasheets at www.pwrx.com for test conditions.)

CM100DU-24NFH, CM150DU-24NFH

CM200DU-24NFH, CM300DU-24NFH

CM300DY-24NFH, CM300E3Y6-24NFH, CM400E3Y6-24NFH

CM300DX1-24NFJ

CM400DU-24NFH, CM400DU-24NFJ, CM600DU-24NFH

MAXIMUM RATINGS (IGBT Inverter Sector)					ELECTRICAL CHARACTERISTICS											FREE WHEEL DIODE			THERMAL CHARACTERISTICS					
					Static				Dynamic															
					Test Conditions		Typ.	Max.	V_{GE} = 0V, V_{CE} = 10V			Inductive Load Switching Times							IGBT (Max.)	Diode (Max.)	Contact Thermal Resistance			
Type	V_{CES} Volts	I_C Amperes	I_{CM} Amperes	V_{RMS} Isolation Volts	I_C Amperes	V_{GE} Volts	$V_{CE(SAT)}$ Volts	$V_{CE(SAT)}$ Volts	C_{ies} nF	C_{oes} nF	C_{res} nF	$t_{d(on)}$ ns	t_r ns	$t_{d(off)}$ ns	t_f ns	I_{FM} Amperes	V_{FM} Volts	t_{rr} ns	$R_{th(j-c)}$ °C/W	$R_{th(j-c)}$ °C/W	$R_{th(j-c)}$ °C/W	Weight Grams	Outline Drawings Number	Page
NFH-Series & NFJ-Series Dual IGBTs																								
CM100DU-24NFH	1200	100	200	2500	100	15	5.0	6.5	16	1.3	0.3	100	50	250	150	100	3.5	150	0.22	0.47	0.17	310	18	A-32
CM150DU-24NFH	1200	150	300	2500	150	15	5.0	6.5	24	2.0	0.45	150	80	400	150	150	3.5	150	0.19	0.35	0.13	310	18	A-32
CM200DU-24NFH	1200	200	400	2500	200	15	5.0	6.5	32	2.7	0.6	300	80	500	150	200	3.5	250	0.15	0.24	0.095	400	19	A-32
CM300DU-24NFH	1200	300	600	2500	300	15	5.0	6.5	47	4.0	0.9	300	80	500	150	300	3.5	250	0.11	0.18	0.066	400	19	A-32
CM300DY-24NFH	1200	300	600	2500	300	15	5.0	6.5	47	4.0	0.9	300	80	500	150	600	3.5	250	0.066	0.1	0.040	400	6	A-27
CM300DX1-24NFJ	1200	300	300	2500	300	15	5.0	6.5	47	5.6	1.1	300	80	500	150	300	3.0	150	0.66	0.93	0.15	330	10	A-29
CM400DU-24NFH	1200	400	800	2500	400	15	5.0	6.5	63	5.3	1.2	300	100	500	150	400	3.5	250	0.12	0.23	0.051	580	24	A-34
CM400DU-24NFJ	1200	400	800	2500	400	15	5.0	6.5	63	5.3	1.2	300	100	500	150	400	5.5	100	0.51	0.093	0.02	580	24	A-34
CM600DU-24NFH	1200	600	1200	2500	600	15	5.0	6.5	95	8.0	1.8	400	120	700	150	600	3.5	250	0.083	0.15	0.034	580	24	A-34
NFH-Series Chopper IGBTs																								
CM300E3Y6-24NFH	1200	300	600	2500	300	15	5.0	6.5	47	4.0	0.9	300	80	500	150	600	2.8	100	0.071	0.411	0.020	400	6	A-27
CM400E3Y6-24NFH	1200	400	800	2500	400	15	5.0	6.5	63	5.3	1.2	300	100	500	150	800	2.8	100	0.057	0.098	0.020	400	6	A-27

NFH-Series & NFJ-Series Dual IGBTs

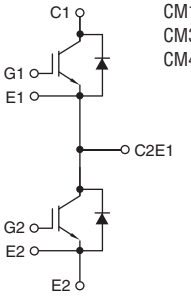

CM100DU-24NFH, CM150DU-24NFH, CM200DU-24NFH, CM300DU-24NFH, CM300DY-24NFH, CM300DX1-24NFJ, CM400DU-24NFH, CM400DU-24NFJ, CM600DU-24NFH

NFH-Series Chopper IGBTs

CM300E3Y6-24NFH, CM400E3Y6-24NFH

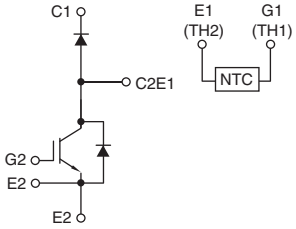

1700V IGBTs

A-Series Single & Dual, S-Series Dual IGBTs,

(Refer to device datasheets at www.pwrx.com for test conditions.)

CM500HA-34A

CM75DY-34A, CM100DY-34A, CM150DY-34A

CM200DY-34A

CM300DY-34A

CM400DY-34A

CM1200DC-34S

MAXIMUM RATINGS (IGBT Inverter Sector)						ELECTRICAL CHARACTERISTICS											FREE-WHEEL DIODE			THERMAL CHARACTERISTICS							
						Static				Dynamic																	
						Test Conditions		Typ.	Max.	V_{GE} = 0V, V_{CE} = 10V			Inductive Load Switching Times							IGBT (Max.)	Diode (Max.)	IGBT Under Chip (Max.)	Diode Under Chip (Max.)	Contact Thermal Resistance			
Type	V_{CES} Volts	I_C@T_C' Amperes	I_{CM} Amperes	T_C' °C	V_{RMS} Isolation Volts	I_C Amperes	V_{GE} Volts	$V_{CE(SAT)}$ Volts	$V_{CE(SAT)}$ Volts	C_{ies} nF	C_{oes} nF	C_{res} nF	$t_{d(on)}$ µs	t_r µs	$t_{d(off)}$ µs	t_f µs	I_{FM} Amperes	V_{FM} Volts	t_{rr} ns	$R_{th(j-c)}$ °C/W	$R_{th(j-c)}$ °C/W	$R_{th(j-c)}$ °C/W	$R_{th(j-c)}$ °C/W	$R_{th(c-f)}$ °C/W	Weight Grams	Outline Drawings Number	Page
A-Series Single IGBT																											
CM500HA-34A	1700	500	1000	87	3500	500	15	2.2	2.8	120.0	14.0	2.6	900	500	1200	250	500	3.2	650	—	—	0.025	0.042	0.015	480	29	A-36
A-Series Dual IGBTs																											
CM75DY-34A	1700	75	150	111	3500	75	15	2.2	2.8	18.5	2.1	0.4	200	150	550	350	75	3.0	300	—	—	0.16	0.29	0.022	310	20	A-33
CM100DY-34A	1700	100	200	108	3500	100	15	2.2	2.8	24.7	2.8	0.53	200	150	550	350	100	3.0	300	—	—	0.13	0.21	0.022	310	20	A-33
CM150DY-34A	1700	150	300	112	3500	150	15	2.2	2.8	37.0	4.2	0.8	550	190	750	350	150	3.0	450	—	—	0.078	0.15	0.02	310	20	A-33
CM200DY-34A	1700	200	400	109	3500	200	15	2.2	2.8	49.4	5.6	1.06	550	190	750	350	200	3.0	450	—	—	0.063	0.11	0.02	400	21	A-33
CM300DY-34A	1700	300	600	108	3500	300	15	2.2	2.8	74.0	8.4	1.6	600	200	850	350	300	3.0	450	—	—	0.043	0.072	0.02	580	22	A-33
CM400DY-34A	1700	400	800	107	3500	400	15	2.2	2.8	98.8	11.2	2.12	600	230	1000	350	400	3.0	500	—	—	0.033	0.055	0.014	1200	9	A-28
S-Series Dual IGBT																											
CM1200DC-34S	1700	1200	2400	110	4000	1200	15	1.95	2.7	216.0	8.0	1.6	0.6	0.16	1.2	0.1	1200	2.3	0.2	0.0185	0.042	—	—	0.016	800	28	A-35

A-Series Single IGBT

CM500HA-34A

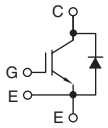

A-Series Dual IGBTs

CM75DY-34A, CM100DY-34A, CM150DY-34A, CM200DY-34A, CM300DY-34A, CM400DY-34A

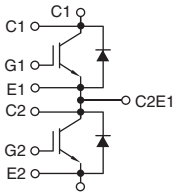

S-Series Dual IGBT

CM1200DC-34S

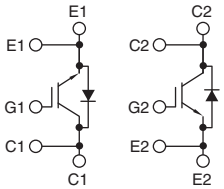

1700V IGBTs

MPD S-Series Dual & MPD NF-Series Chopper IGBTs,

(Refer to device datasheets at www.pwrx.com for test conditions.)

CM1000DUC-34SA,
CM1000E3U-34NF

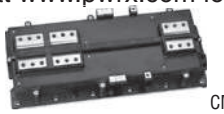

CM1800DY-34S

MAXIMUM RATINGS (IGBT Inverter Sector)						ELECTRICAL CHARACTERISTICS											FREE-WHEEL DIODE			THERMAL CHARACTERISTICS							
						Static				Dynamic																	
						Test Conditions		Typ.	Max.	V_{GE} = 0V, V_{CE} = 10V			Inductive Load Switching Times							IGBT (Max.)	Diode (Max.)	IGBT Under Chip (Max.)	Diode Under Chip (Max.)	Contact Thermal Resistance			
Type	V_{CES} Volts	I_C@T_C' Amperes	I_{CM} Amperes	T_C' °C	V_{RMS} Isolation Volts	I_C Amperes	V_{GE} Volts	$V_{CE(SAT)}$ Volts	$V_{CE(SAT)}$ Volts	C_{ies} nF	C_{oes} nF	C_{res} nF	$t_{d(on)}$ µs	t_r µs	$t_{d(off)}$ µs	t_f µs	I_{FM} Amperes	V_{FM} Volts	t_{rr} ns	$R_{th(j-c)}$ °C/W	$R_{th(j-c)}$ °C/W	$R_{th(j-c)}$ °C/W	$R_{th(j-c)}$ °C/W	$R_{th(c-f)}$ °C/W	Weight Grams	Outline Drawings Number	Page
MPD S-Series Dual IGBT																											
CM1000DUC-34SA	1700	1000	2000	125	4000	1000	15	1.9	2.4	260.0	27.0	5.0	900	350	1250	400	1000	4.0	400	0.015	0.024	—	—	0.060	1450	23	A-34
CM1800DY-34S	1700	1800	3600	66	3500	1800	15	2.1	2.6	460.0	48.0	8.0	1100	200	950	500	1800	2.0	350	0.016	0.027	—	—	0.038	2000	38	A-39

MAXIMUM RATINGS (IGBT Inverter Sector)					ELECTRICAL CHARACTERISTICS												FREE-WHEEL DIODE			THERMAL CHARACTERISTICS					
					Static				Dynamic																
					Test Conditions		Typ.	Max.	V_{GE} = 0V, V_{CE} = 10V			Inductive Load Switching Times							Interface Per Module	IGBT (Max.)	Diode (Max.)			
Type	V_{CES} Volts	I_C Amperes	I_{CM} Amperes	V_{RMS} Isolation Volts	I_C Amperes	V_{GE} Volts	$V_{CE(SAT)}$ Volts	$V_{CE(SAT)}$ Volts	C_{ies} nF	C_{oes} nF	C_{res} nF	$t_{d(on)}$ µs	t_r µs	$t_{d(off)}$ µs	t_f µs	I_{FM} Amperes	V_{FM} Volts	t_{rr} µs	$R_{th(j-c)}$ °C/W	$R_{th(j-c)}$ °C/W	$R_{th(j-c)}$ °C/W	Weight Grams	Outline Drawings Number	Page
MPD NF-Series Chopper IGBT																								
CM1000E3U-34NF	1700	1000	2000	3500	1000	15	2.45	2.80	220	25.0	4.7	0.6	0.15	0.9	0.2	2000	3.0	0.45	0.012	0.014	0.023	1400	23	A-34

MPD S-Series Dual IGBT

CM1000DUC-34SA,
CM1800DY-34S

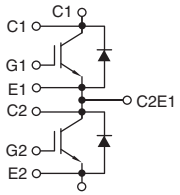

MPD NF-Series Chopper IGBT

CM1000E3U-34NF

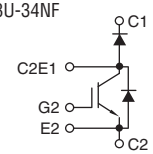

1700V IGBTs

NX-Series Dual & Chopper IGBTs,

(Refer to device datasheets at www.pwrx.com for test conditions.)

CM150DX-34SA, CM200DX-34SA, CM300DX-34SA, CM450DX-34SA

CM450DXL-34S, CM600DXL-34S

CM200EXS-34SA

MAXIMUM RATINGS						ELECTRICAL CHARACTERISTICS												FREE-WHEEL DIODE		
Inverter Sector						Static				Dynamic										
						Test Conditions		Typ.	Max.	V_{GE} = 0V, V_{CE} = 10V			Inductive Load Switching Times							
Type	V_{CES} Volts	I_C@T_C' Amperes	I_{CM} Amperes	T_C' °C	V_{RMS} Isolation Volts	I_C Amperes	V_{GE} Volts	$V_{CE(SAT)}$ Volts	$V_{CE(SAT)}$ Volts	C_{ies} nF	C_{oes} nF	C_{res} nF	$t_{d(on)}$ ns	t_r ns	$t_{d(off)}$ ns	t_f ns	I_{FM} Amperes	V_{FM} Volts	t_{rr} ns
NX-Series Dual IGBTs																				
CM150DX-34SA	1700	150	300	125	4000	150	15	1.9	2.4	26	1.1	0.26	400	100	700	600	150	4.0	300
CM200DX-34SA	1700	200	400	125	4000	200	15	1.9	2.4	35	1.5	0.35	400	100	700	600	200	4.0	300
CM300DX-34SA	1700	300	600	125	4000	300	15	1.9	2.4	52	2.2	0.52	400	100	700	600	300	4.0	300
CM450DX-34SA	1700	450	900	125	4000	450	15	2.25	2.9	79	8.0	1.36	300	120	350	120	450	3.8	100
CM450DXL-34SA	1700	450	900	125	4000	450	15	1.9	2.4	119	9.8	2.2	900	150	900	400	450	2.6	300
CM600DXL-34SA	1700	600	1200	125	4000	600	15	1.9	2.4	158	13.0	2.9	900	150	900	400	600	2.6	300
NX-Series Chopper IGBT																				
CM200EXS-34SA	1700	200	400	125	4000	200	15	2.2	2.7	35	1.5	0.35	400	100	700	600	400	4.0	300

THERMAL CHARACTERISTICS						
Inverter Sector						
Type	IGBT Under Chip (Max.) $R_{th(j-c)}$ °C/W	Diode Under Chip (Max.) $R_{th(j-c)}$ °C/W	Contact Thermal Resistance $R_{th(c-f)}$ °C/W	Weight Grams	Outline Drawings Number	Page
NX-Series Dual IGBTs						
CM150DX-34SA	0.1	0.16	0.015	350	44	A-42
CM200DX-34SA	0.075	0.12	0.015	350	44	A-42
CM300DX-34SA	0.05	0.08	0.015	350	44	A-42
CM450DX-34SA	0.05	0.08	0.015	330	44	A-42
CM450DXL-34SA	0.034	0.052	0.007	690	39	A-39
CM600DXL-34SA	0.026	0.039	0.007	690	39	A-39
NX-Series Chopper IGBT						
CM200EXS-34SA	0.075	0.12	0.025	210	43	A-41

NX-Series Dual IGBTs
CM150DX-34SA, CM200DX-34SA, CM300DX-34SA, CM450DX-34SA

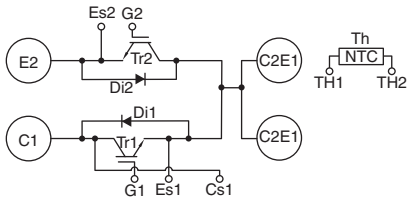

NX-Series Chopper IGBT
CM200EXS-34S

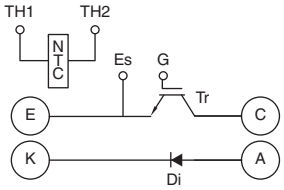

CM450DXL-34SA, CM600DXL-34SA

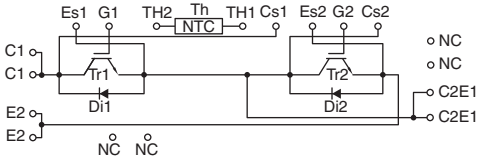

1700V IGBTs

NX-Series 7-Pac IGBTs, (Refer to device datasheets at www.pwrx.com for test conditions.)

CM75RX-34SA

CM150RXL-34SA

MAXIMUM RATINGS											ELECTRICAL CHARACTERISTICS											FREE-WHEEL DIODE		
	Inverter Sector					Brake Sector					Static				Dynamic									
											Test Conditions		Typ.	Max.	V_{GE} = 0V, V_{CE} = 10V			Inductive Load Switching Times						
Type	V_{CES} Volts	I_C@T_C' Amperes	I_{CM} Amperes	T_C' °C	V_{RMS} Isolation Volts	V_{CES} Volts	I_C@T_C' Amperes	I_{CM}@T_C' Amperes	T_C' °C	P_d Watts	I_C Amperes	V_{GE} Volts	$V_{CE(SAT)}$ Volts	$V_{CE(SAT)}$ Volts	C_{ies} nF	C_{oes} nF	C_{res} nF	$t_{d(on)}$ ns	t_r ns	$t_{d(off)}$ ns	t_f ns	I_{FM} Amperes	V_{FM} Volts	t_{rr} ns
7-Pac IGBTs																								
CM75RX-34SA	1700	75	150	125	4000	1700	50	100	125	600	75	15	1.9	2.4	20.0	1.6	0.36	200	100	700	600	75	2.6	200
CM150RXL-34SA	1700	150	300	125	4000	1700	75	150	125	830	150	15	2.0	2.5	40.0	3.3	0.73	400	100	700	600	150	2.7	200

THERMAL CHARACTERISTICS								
	Inverter Sector		Brake Sector					
Type	IGBT Under Chip (Max.) $R_{th(j-c)}$ °C/W	Diode Under Chip (Max.) $R_{th(j-c)}$ °C/W	IGBT Under Chip (Max.) $R_{th(j-c)}$ °C/W	Diode Under Chip (Max.) $R_{th(j-c)}$ °C/W	Contact Thermal Resistance $R_{th(c-f)}$ °C/W	Weight Grams	Outline Drawings Number	Page
7-Pac IGBTs								
CM75RX-34SA	0.18	0.27	0.25	0.35	0.015	370	12	A-30
CM150RXL-34SA	0.1	0.16	0.18	0.27	0.007	690	42	A-41

7-Pac IGBTs

CM75RX-34SA, CM150RXL-34SA

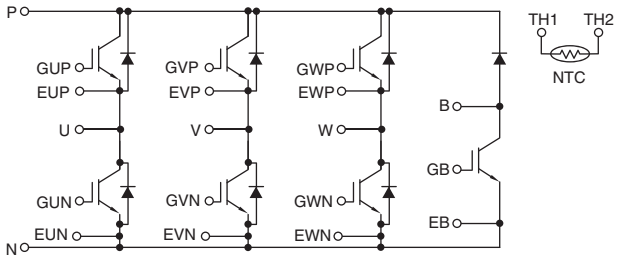

1700V HVIGBTs

Single, Dual, & Chopper HVIGBTs, (Refer to device datasheets at www.pwrx.com for test conditions.)

CM1800HC-34N, CM1200E4C-34N, CM2400HC-34N

CM1800HCB-34N

CM1200DB-34N, CM1200DC-34N

QIS1760002, QIS1790001

MAXIMUM RATINGS (IGBT Inverter Sector)					ELECTRICAL CHARACTERISTICS											FREE-WHEEL DIODE			THERMAL CHARACTERISTICS					
					Static				Dynamic										Interface Per Module	IGBT (Max.)	Diode (Max.)			
					Test Conditions		Typ.	Max.	V_{GE} = 0V, V_{CE} = 10V			Inductive Load Switching Times												
Type	V_{CES} Volts	I_C Amperes	I_{CM} Amperes	V_{RMS} Isolation Volts	I_C Amperes	V_{GE} Volts	$V_{CE(SAT)}$ Volts	$V_{CE(SAT)}$ Volts	C_{ies} nF	C_{oes} nF	C_{res} nF	$t_{d(on)}$ µs	t_r µs	$t_{d(off)}$ µs	t_f µs	I_{FM} Amperes	V_{FM} Volts	t_{rr} µs	$R_{th(c-f)}$ °C/W	$R_{th(j-c)}$ °C/W	$R_{th(j-c)}$ °C/W	Weight Grams	Outline Drawings Number	Page
1700V Single HVIGBTs																								
CM800HA-34H	1700	800	1600	4000	800	15	2.75	3.58	93	13.3	5.1	1.2	1.5	2.0	0.6	800	3.12	2.0	0.012	0.015	0.048	1500	26	A-35
CM1200HA-34H	1700	1200	2400	4000	1200	15	2.75	3.58	140	20.0	7.6	1.2	1.5	2.0	0.6	1200	3.12	2.0	0.008	0.010	0.032	1500	26	A-35
CM1800HC-34N	1700	1800	3600	4000	1800	15	2.15	—	264	14.4	4.2	1.0	0.35	2.0	0.25	1800	2.4	1.0	0.011	0.013	0.028	800	27	A-35
CM1800HCB-34N	1700	1800	3600	4000	1800	15	2.0	—	352	19.2	5.6	0.95	0.3	1.6	0.25	1800	2.35	1.2	0.007	0.009	0.013	1500	30	A-36
CM2400HC-34N	1700	2400	4800	4000	2400	15	2.15	—	352	19.2	5.6	1.0	0.35	2.0	0.25	2400	2.4	1.0	0.008	0.0098	0.021	800	27	A-35
CM2400HCB-34N	1700	2400	4800	4000	2400	15	2.1	—	396	21.6	6.3	0.95	0.3	1.6	0.25	2400	2.5	1.2	0.006	0.008	0.012	1500	30	A-36
QIS1760002	1700	600	1200	3500	600	15	2.0	2.5	104	4.4	1.04	TBD	TBD	TBD	TBD	600	—	0.3	0.015	0.026	0.038	600	56	A-46
QIS1790001	1700	900	1800	3500	900	15	2.0	2.5	156	6.6	1.56	0.4	0.1	0.7	0.6	900	—	0.3	0.015	0.018	0.028	600	56	A-46
1700V Dual HVIGBTs																								
CM600DY-34H	1700	600	1200	4000	600	15	2.75	3.58	70	10.0	3.8	1.2	1.5	2.0	0.6	600	3.12	2.0	0.016	0.02	0.064	1500	31	A-36
CM800DZ-34H	1700	800	1600	4000	800	15	2.80	3.64	72	9.0	3.6	1.6	2.0	2.7	0.8	800	3.38	2.7	0.020	0.025	0.043	1500	31	A-36
CM1200DB-34N	1700	1200	2400	4000	1200	15	2.15	2.80	176	9.6	2.8	1.0	0.4	1.2	0.3	1200	2.3	1.0	0.016	0.018	0.04	1300	28	A-35
CM1200DC-34N	1700	1200	2400	4000	1200	15	2.15	—	125	12.5	2.1	1.2	0.3	1.8	0.4	1200	2.3	2.0	0.008	0.0195	0.04	1000	28	A-35
1700V Chopper HVIGBTs																								
CM600E2Y-34H	1700	600	1200	4000	600	15	2.75	3.58	70	10.0	3.8	1.2	1.5	2.0	0.6	600	3.25	2.0	0.016	0.02	0.064	1500	32	A-37
CM1200E4C-34N	1700	1200	2400	4000	1200	15	2.15	2.80	176	9.6	2.8	0.8	0.4	1.2	0.3	1200	2.6	1.0	0.016	0.019	0.042	800	27	A-35

1700V Single HVIGBTs

CM800HA-34H, CM1200HA-34H, CM1800HC-34N, CM2400HC-34N

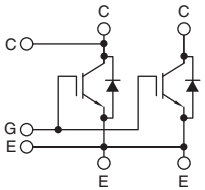

CM1800HCB-34N, CM2400HCB-34N

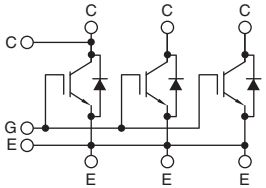

QIS1760002, QIS1790001

1700V Dual HVIGBTs

CM600DY-34H, CM800DZ-34H

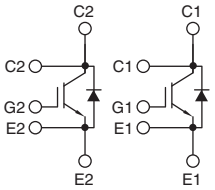

CM1200DB-34N, CM1200DC-34N

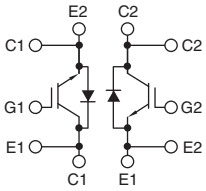

1700V Chopper HVIGBTs

CM600E2Y-34H

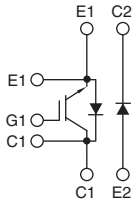

CM1200E4C-34N

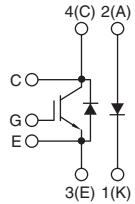

2500V IGBT, (Refer to device datasheets at www.pwrx.com for test conditions.)

QIS2510001

MAXIMUM RATINGS						ELECTRICAL CHARACTERISTICS												FREE-WHEEL DIODE			THERMAL CHARACTERISTICS				
						Static Test Conditions		T_j = 25°C		Dynamic															
								Typ.	Max.	V_{GE} = 0V, f = 1KHz				Resistive Load Switching Times							IGBT (Max.)	Diode (Max.)			
Type	V_{CES} Volts	I_C Amperes	I_{CM} Amperes	$T_{j(MAX)}$ °C	V_{RMS} Isolation Volts	I_C Amperes	V_{GE} Volts	$V_{CES\ (SAT)}$ Volts	$V_{CES\ (SAT)}$ Volts	$V_{CE(SAT)}$ Test Cond.	C_{ies} nF	C_{oes} nF	C_{res} nF	$t_{d(on)}$ ns	t_r ns	$t_{d(off)}$ ns	t_r ns	I_{FM} Amperes	V_{FM} Volts	t_{rr} ns	$R_{th(j-c)}$ °C/W	$R_{th(j-c)}$ °C/W	Weight Grams	Outline Drawings Number	Page
2500V Single IGBT																									
QIS2510001	2500	100	200	150	TBD	100	15	3.2	4.2	10	10	1.1	0.33	TBD	TBD	TBD	TBD	—	—	—	0.10 Typ.	—	21	46	A-42

2500V Single IGBT

QIS2510001

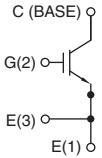

3300 Volt HVIGBTs, (Refer to device datasheets at www.pwrx.com for test conditions.)

CM400HG-66H

CM400DY-66H

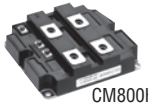
CM800HB-66H

CM800HC-66H, CM1000HC-66R

CM1200HG-66H

CM1500HG-66R

CM800E2C-66H, CM800E6C-66H, CM1000E4C-66R, CM1200HC-66H, CM1500HC-66R

QID3310005, QID3320002

QID3320004

MAXIMUM RATINGS (IGBT Inverter Sector)					ELECTRICAL CHARACTERISTICS											FREE-WHEEL DIODE			THERMAL CHARACTERISTICS					
					Static				Dynamic										Interface Per Module	IGBT (Max.)	Diode (Max.)			
					Test Conditions		Typ.	Max.	V_{GE} = 0V, V_{CE} = 10V			Inductive Load Switching Times												
Type	V_{CES} Volts	I_C Amperes	I_{CM} Amperes	V_{RMS} Isolation Volts	I_C Amperes	V_{GE} Volts	$V_{CE(SAT)}$ Volts	$V_{CE(SAT)}$ Volts	C_{ies} nF	C_{oes} nF	C_{res} nF	$t_{d(on)}$ µs	t_r µs	$t_{d(off)}$ µs	t_f µs	I_{FM} Amperes	V_{FM} Volts	t_{rr} µs	$R_{th(c-f)}$ °C/W	$R_{th(j-c)}$ °C/W	$R_{th(j-c)}$ °C/W	Weight Grams	Outline Drawings Number	Page
3300V Single HVIGBTs																								
CM400HG-66H	3300	400	800	10200	400	15	3.3	4.2	60	6.0	5.4	1.6	1.0	2.5	1.0	400	3.6	1.4	0.018	0.030	0.060	520	35	A-38
CM800HB-66H	3300	800	1600	6000	800	15	3.8	4.94	120	12.0	3.6	1.6	2.0	2.5	1.0	800	3.64	1.4	0.008	0.012	0.024	1500	33	A-37
CM800HC-66H	3300	800	1600	6000	800	15	3.3	4.2	120	12.0	3.6	1.6	1.0	2.5	1.0	800	2.8	1.4	0.008	0.013	0.025	1000	41	A-40
CM1000HC-66R	3300	1000	2000	6000	1000	15	2.45	—	140	8.7	4.0	1.0	0.28	2.7	0.3	2000	2.15	0.5	0.009	0.012	0.0225	900	41	A-40
CM1200HC-66H	3300	1200	2400	6000	1200	15	3.3	4.29	180	18.0	5.4	1.6	2.0	2.5	1.0	1200	3.64	1.4	0.008	0.010	0.020	2200	30	A-36
CM1200HG-66H	3300	1200	2400	10200	1200	15	3.3	4.2	180	18.0	5.4	1.6	1.0	2.5	1.0	1200	3.6	1.4	0.006	0.010	0.020	1350	36	A-38
CM1500HC-66R	3300	1500	3000	6000	1500	15	—	5.0	210	13.0	6.0	1.0	0.25	2.7	0.3	1500	2.15	0.55	0.008	—	0.015	1200	30	A-36
CM1500HG-66R	3300	1500	3000	10200	1500	—	2.15	—	210	13.0	6.0	1.0	0.28	2.7	0.3	1500	2.15	0.50	0.006	0.0085	0.0155	1400	14	A-31
3300V Dual HVIGBTs																								
QID3310005	3300	100	200	9000	100	15	2.7	3.3	12	0.8	0.35	0.8	0.16	3.2	1.3	200	—	0.5	0.018	0.150	0.22	900	37	A-38
QID3320002	3300	200	400	9000	200	15	2.7	3.3	23	1.5	0.7	0.8	0.16	3.2	1.3	200	—	0.85	0.018	0.074	0.11	900	37	A-38
QID3320004	3300	200	400	6000	200	15	2.7	3.0	23	1.5	0.7	0.8	0.16	3.2	1.3	400	—	0.85	0.018	0.060	0.096	800	51	A-44
QID3340001	3300	400	800	6000	400	15	2.7	3.3	46	3.0	1.3	1.0	0.28	2.7	0.3	800	—	0.7	0.010	0.036	0.0675	900	57	A-46
QID3350001	3300	500	1000	6000	500	15	2.7	2.85	58	3.6	1.6	1.1	0.31	3.0	0.33	1000	—	0.7	0.008	0.0275	0.052	900	57	A-46
3300V Split Dual HVIGBT																								
CM400DY-66H	3300	400	800	6000	400	15	4.4	5.72	40	4.0	1.2	1.0	2.0	2.0	1.0	400	4.29	1.2	0.016	0.036	0.072	1500	34	A-37
3300V Chopper HVIGBTs																								
CM800E2C-66H	3300	800	1600	6000	800	15	3.8	4.94	120	12.0	3.6	1.6	2.0	2.5	1.0	800	3.8	1.4	0.008	0.013	0.025	1500	30	A-36
CM800E6C-66H	3300	800	1600	6000	800	15	3.3	4.2	120	12.0	3.6	1.6	1.0	2.5	1.0	800	2.8	1.4	0.008	0.013	0.025	1500	30	A-36
CM1000E4C-66R	3300	1000	2000	6000	1000	15	2.45	—	140	8.7	4.0	1.0	0.28	2.7	0.3	2000	2.15	0.5	0.007	0.012	0.0225	1200	30	A-36

3300V Single HVIGBTs

CM400HG-66H

CM800HB-66H, CM800HC-66H, CM1000HC-66R

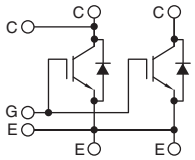

CM1200HC-66H, CM1200HG-66H, CM1500HC-66R, CM1500HG-66R

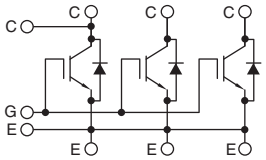

3300V Dual HVIGBTs

QID3310005, QID3320002

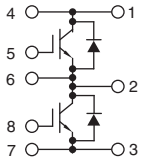

QID3320004

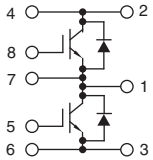

QID3340001, QID3350001

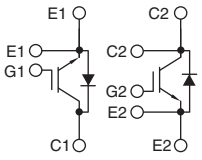

3300V Split Dual HVIGBT

CM400DY-66H

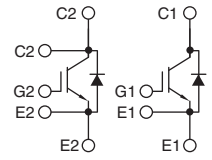

3300V Chopper HVIGBTs

CM800E2C-66H, CM800E6C-66H, CM1000E4C-66R

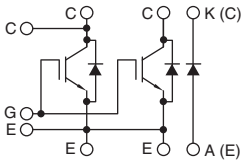

4500V HVIGBTs, (Refer to device datasheets at www.pwrx.com for test conditions.)

CM400HB-90H, CM600HB-90H

CM600HG-90H

CM800HC-90R

CM800HG-90R

CM900HB-90H, CM900HC-90H

CM900HG-90H

CM1200HC-90R

CM1200HG-90R

QID4515001, QID4515002, QID4520002, QIF4515002

QID4515004

QIS4506001

QIS4506002

MAXIMUM RATINGS (IGBT Inverter Sector)					ELECTRICAL CHARACTERISTICS											FREE-WHEEL DIODE			THERMAL CHARACTERISTICS					
					Static				Dynamic										Interface Per Module	IGBT (Max.)	Diode (Max.)			
					Test Conditions		Typ.	Max.	V_{GE} = 0V, V_{CE} = 10V, f = 1mHz			Inductive Load Switching Times												
Type	V_{CES} Volts	I_C Amperes	I_{CM} Amperes	V_{RMS} Isolation Volts	I_C Amperes	V_{GE} Volts	$V_{CE(SAT)}$ Volts	$V_{CE(SAT)}$ Volts	C_{ies} nF	C_{oes} nF	C_{res} nF	$t_{d(on)}$ µs	t_r µs	$t_{d(off)}$ µs	t_f µs	I_{FM} Amperes	V_{FM} Volts	t_{rr} µs	$R_{th(c-f)}$ °C/W	$R_{th(j-c)}$ °C/W	$R_{th(j-c)}$ °C/W	Weight Grams	Outline Drawings Number	Page
4500V Single HVIGBTs																								
QIS4506001	4500	60	120	TBD	60	6.0	3.0	3.9	9.0	0.65	0.2	2.40	2.40	6.0	1.2	—	—	—	—	0.10 Typ.	—	21	46	A-42
QIS4506002	4500	60	120	TBD	60	6.0	3.0	3.9	9.0	0.65	0.2	2.40	2.40	6.0	1.2	—	—	—	—	0.10 Typ.	—	21	47	A-43
CM400HB-90H	4500	400	800	6000	400	5.0	3.0	3.9	72	5.30	1.6	2.40	2.40	6.0	1.2	400	4.0	1.8	0.015	0.023	0.045	1500	33	A-37
CM600HB-90H	4500	600	1200	6000	600	15	3.0	3.9	108	8.00	2.4	2.40	2.40	6.0	1.2	600	4.0	1.8	0.010	0.015	0.030	1500	33	A-37
CM600HG-90H	4500	600	1200	10,200	600	15	3.45	—	108	8.00	2.4	2.40	1.20	6.0	1.2	600	4.8	1.8	0.009	0.016	0.033	1000	40	A-40
CM800HC-90R	4500	800	1600	6000	800	15	3.5	5.1	117	7.30	3.3	0.95	0.3	3.6	0.4	800	2.5	0.7	0.009	0.015	0.029	900	15	A-31
CM800HG-90R	4500	800	1600	10,200	800	15	3.5	—	117	7.30	3.3	1.00	0.28	3.6	0.35	1600	2.5	0.7	0.009	0.016	0.0295	900	45	A-42
CM900HG-90H	4500	900	1800	10,200	900	15	3.45	—	162	12.0	3.6	2.40	1.20	6.0	1.2	1800	4.8	—	0.006	0.011	0.022	1350	36	A-38
CM900HB-90H	4500	900	1800	6000	900	15	3.0	3.9	162	12.0	3.6	2.40	2.40	6.0	1.2	900	4.0	1.8	0.007	0.010	0.020	2200	30	A-36
CM900HC-90H	4500	900	1800	6000	900	15	3.0	3.9	162	12.0	3.6	2.40	2.40	6.0	1.2	900	4.0	1.8	—	—	—	2200	30	A-36
CM1200HC-90R	4500	1200	2400	6000	1200	15	3.5	—	175	11.0	5.0	1.00	0.30	6.25	0.4	2400	2.6	0.7	0.006	0.095	0.0185	1200	17	A-32
CM1200HG-90R	4500	1200	2400	10,200	1200	15	3.3	—	180	12.0	6.0	0.95	0.25	5.8	0.4	1200	2.6	0.9	0.006	0.010	0.019	1400	14	A-31
4500V Dual HVIGBTs																								
QID4515001	4500	150	300	9000	150	15	3.5	3.9	18	1.33	0.4	1.50	0.50	3.5	1.2	300	—	1.8	0.018	0.087	0.174	900	37	A-38
QID4515002	4500	150	300	9000	150	15	3.8	—	19	1.22	0.55	1.00	0.30	3.6	0.36	300	—	0.7	0.018	0.083	0.157	900	37	A-38
QID4515004	4500	150	300	6000	150	15	3.8	—	19	1.22	0.55	1.00	0.30	3.6	0.36	300	—	0.7	0.018	0.079	0.149	800	51	A-44
QID4520002	4500	200	400	9000	200	15	3.5	—	29	1.83	0.83	1.00	0.30	3.6	0.36	400	—	0.7	0.018	0.055	0.104	900	37	A-38
4500V Dual Common Collector HVIGBT																								
QIF4515002	4500	150	300	9000	150	15	3.8	—	19	1.22	0.55	1.00	0.30	3.6	0.36	150	—	0.7	0.018	0.083	0.157	900	37	A-38

4500V Single HVIGBTs
CM400HB-90H, CM600HB-90H, CM600HG-90H, CM800HC-90R, CM800HG-90R

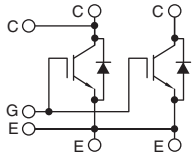

CM900HB-90H, CM900HC-90H, CM900HG-90H, CM1200HC-90R, CM1200HG-90R

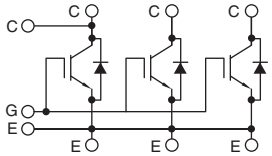

QIS4506001, QIS4506002

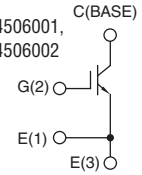

4500V Dual HVIGBTs
QID4515001, QID4515002, QID4520002

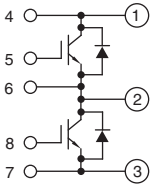

QID4515004

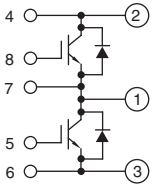

4500V Dual Common Collector HVIGBT
QIF4515002

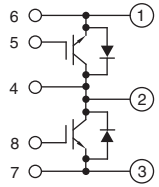

6500V HVIGBTs, (Refer to device datasheets at www.pwrx.com for test conditions.)

CM400HG-130H

CM400E2G-130H, CM400E4G-130H, CM600HG-130H

CM750HG-130R

CM200HG-130H

QIS6502002

QIC6508001, QID6508001

MAXIMUM RATINGS (IGBT Inverter Sector)					ELECTRICAL CHARACTERISTICS											FREE-WHEEL DIODE			THERMAL CHARACTERISTICS					
					Static				Dynamic										Interface Per Module	IGBT (Max.)	Diode (Max.)			
					Test Conditions		Typ.	Max.	V_{GE} = 0V, V_{CE} = 10V			Inductive Load Switching Times												
Type	V_{CES} Volts	I_C Amperes	I_{CM} Amperes	V_{RMS} Isolation Volts	I_C Amperes	V_{GE} Volts	$V_{CE(SAT)}$ Volts	$V_{CE(SAT)}$ Volts	C_{ies} nF	C_{oes} nF	C_{res} nF	$t_{d(on)}$ µs	t_r µs	$t_{d(off)}$ µs	t_f µs	I_{FM} Amperes	V_{FM} Volts	t_{rr} µs	$R_{th(c-f)}$ °C/W	$R_{th(j-c)}$ °C/W	$R_{th(j-c)}$ °C/W	Weight Grams	Outline Drawings Number	Page
6500V Single HVIGBTs																								
QIS6502002	6500	25	50	—	25	15	4.2	—	6.28	0.38	0.06	0.64	0.27	1.54	0.62	—	—	—	0.10	0.140	—	20	47	A-43
CM200HG-130H	6500	200	400	10200	200	15	5.10	—	41	2.5	0.7	1.20	0.35	6.6	3.3	200	4.0	2.4	0.018	0.042	0.066	800	35	A-38
CM400HG-130H	6500	400	800	10200	400	15	4.50	—	82	5.0	1.4	1.20	0.35	8.2	0.5	400	4.0	1.0	0.009	0.021	0.033	1000	40	A-40
CM600HG-130H	6500	600	1200	10200	600	15	5.10	—	124	7.6	2.2	1.20	0.35	4.5	4.5	600	3.8	2.4	0.006	0.014	0.024	1500	36	A-38
CM750HG-130R	6500	750	1500	10200	750	15	3.30	—	140	6.0	2.4	1.15	0.20	8.3	0.5	750	2.8	0.8	0.006	0.012	0.024	1400	14	A-31
6500V Dual HVIGBT																								
QID6508001	6500	85	170	9000	85	15	3.8	—	15	0.95	0.44	TBD	TBD	TBD	TBD	170	—	0.7	0.018	0.100	0.175	900	37	A-38
6500V Dual Common Emitter HVIGBTs																								
QIC6508001	6500	85	170	9000	85	15	3.8	—	15	0.95	0.44	TBD	TBD	TBD	TBD	170	—	0.7	0.018	0.100	0.175	900	37	A-38
6500V Chopper HVIGBTs																								
CM400E2G-130H	6500	400	800	10200	400	15	4.50	—	82	5.0	1.4	1.20	0.35	8.2	0.5	800	4.0	1.0	0.009	0.021	0.033	1350	36	A-38
CM400E4G-130H	6500	400	800	10200	400	15	4.50	—	82	5.0	1.4	1.20	0.35	8.2	0.5	800	4.0	1.0	0.009	0.021	0.033	1350	36	A-38

6500V Single HVIGBTs
CM400HG-130H

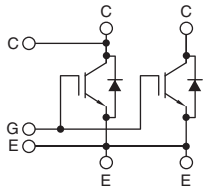

CM200HG-130H, CM600HG-130H, CM750HG-130R

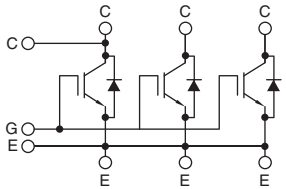

QIS6502002

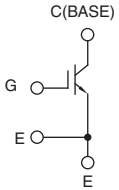

6500V Dual HVIGBT
QID6508001

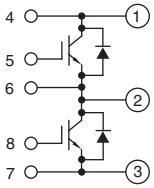

6500V DualCommon Emitter HVIGBT
QIC6508001

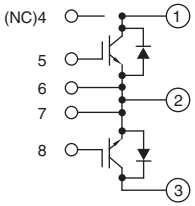

6500V Chopper HVIGBTs
CM400E2G-130H, CM400E4G-130H

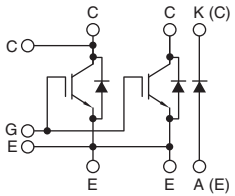

1 CM50RL-24NF, CM50TL-24NF, CM75TL-12NF, CM150TL-12NF

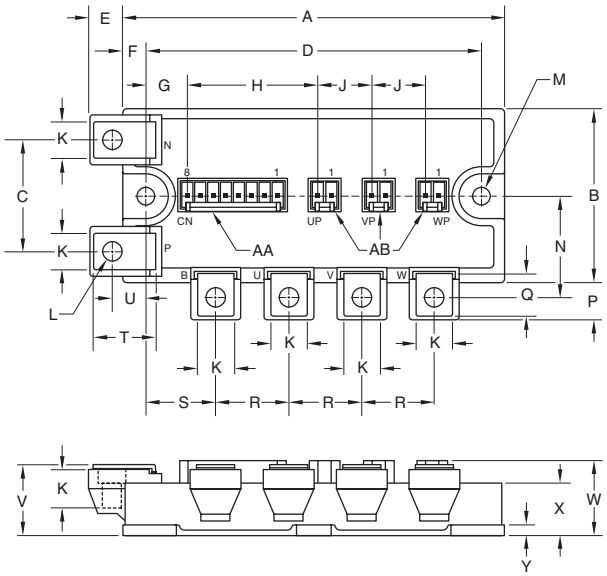

Dim.	Inches	Millimeters
A	4.72	120.0
B	2.17	55.0
C	1.39	35.0
D	4.17±0.02	106.0±0.5
E	0.43	11.0
F	0.28	7.0
G	0.54	13.62
H	1.61	40.78
J	0.67	17.0
K	0.47	12.0
L	M5 Metric	M5
M	0.22 Dia.	5.5 Dia.

Dim.	Inches	Millimeters
N	1.23	32.0
P	0.47	11.75
Q	0.53	13.5
R	0.91	23.0
S	0.87	22.0
T	0.76	19.75
U	0.42	10.75
V	0.87+0.04/-0.02	22.0+1.0/-0.5
W	0.91	23.2
X	0.63	16.0
Y	0.12	3.0

Housing Types (J.S.T. Mfg. Co. Ltd.)
AA – B8P-VH-FB-B
AB – B2P-VH-FB-B

2 CM600HA-5F

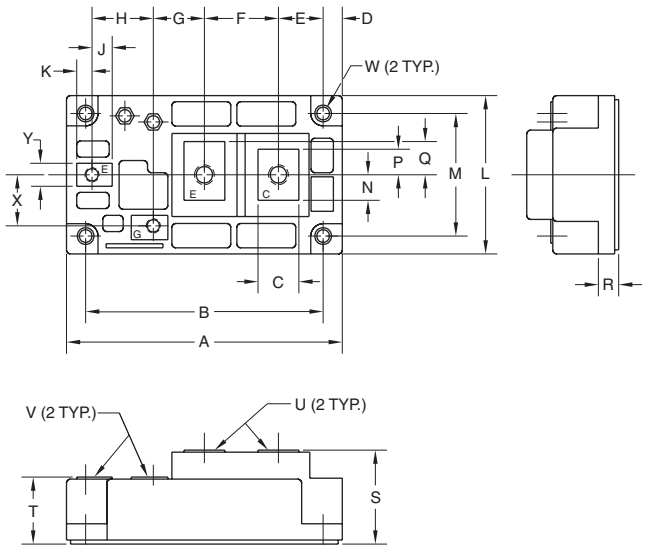

Dim.	Inches	Millimeters
A	4.25	108.0
B	3.66	93.0
C	0.63	16.0
D	0.30	7.5
E	0.69	17.5
F	1.14	29.0
G	0.79	20.0
H	0.94	24.0
J	0.31	7.9
K	0.24	6.0
L	2.44	62.0
M	1.89	48.0

Dim.	Inches	Millimeters
N	0.39	10.0
P	0.39	10.0
Q	0.51	13.0
R	0.33	8.5
S	1.42	36.0
T	1.02	25.8
U	M6 Metric	M6
V	M4 Metric	M4
W	0.22 Dia.	5.5 Dia.
X	0.79	20.0
Y	0.35	9.0

3 CM200TU-5F

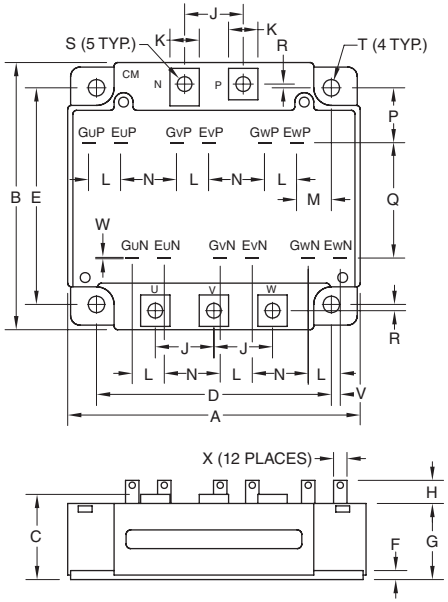

Dim.	Inches	Millimeters
A	4.21	107.0
B	4.02	102.0
C	1.14 +0.04/-0.02	29.0 +1.0/-0.5
D	3.54±0.01	90.0±0.25
E	3.15±0.01	80.0±0.25
F	0.16	4.0
G	1.02	26.0
H	0.31	8.1
J	0.91	23.0
K	0.47	12.0
L	0.43	11.0

Dim.	Inches	Millimeters
M	0.57	14.4
N	0.85	21.7
P	0.67	17.0
Q	1.91	48.5
R	0.15	3.75
S	M5	M5
T	0.22 Dia.	5.5 Dia.
U	0.02	0.5
V	0.03	0.8
W	0.02	0.5
X	0.110	2.8

4 CM400C1Y-24S

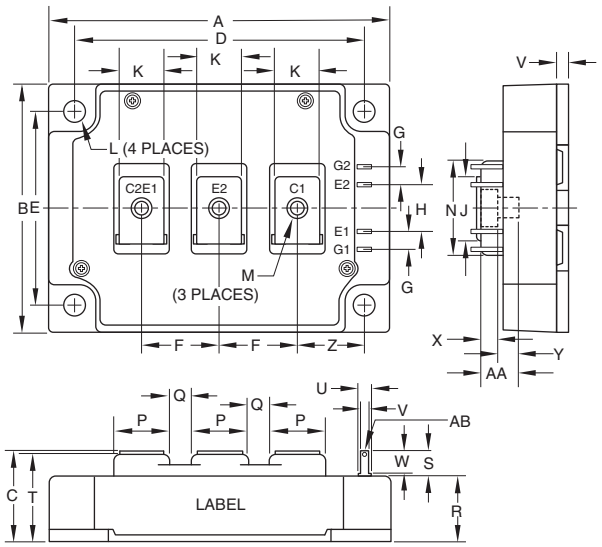

Dim.	Inches	Millimeters
A	4.33	110.0
B	3.15	80.0
C	1.14+0.04/-0.02	29.0+1.0/-0.5
D	3.66±0.01	93.0±0.25
E	2.44±0.01	62.0±0.25
F	0.98	25.0
G	0.24	6.0
H	0.59	15.0
J	0.81	20.5
K	0.55	14.0
L	0.26 Dia.	6.5 Dia.
M	M6 Metric	M6
N	1.18	30.0

Dim.	Inches	Millimeters
P	0.71	18.0
Q	0.28	7.0
R	0.84	21.2
S	0.33	8.5
T	1.10	28.0
U	0.16	4.0
V	0.11	2.8
W	0.29	7.5
X	0.21	5.3
Y	0.26	6.7
Z	0.85	21.5
AA	0.47	12.0
AB	t = 0.02	t = 0.5

5 CM100DY-24NF, CM150DY-12NF, CM200DY-12NF, CM300DY-12NF

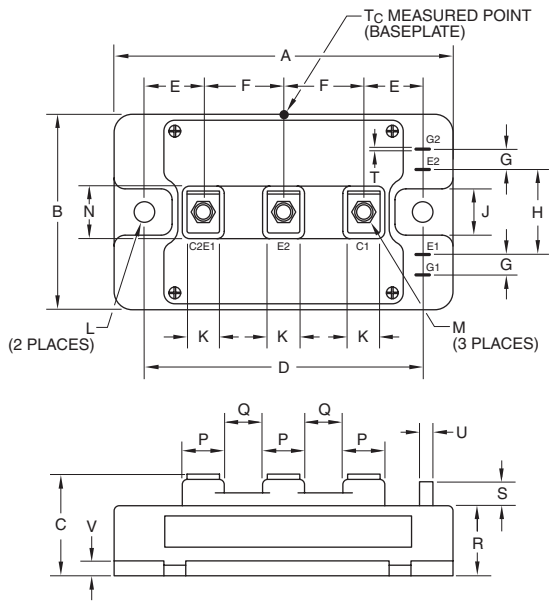

Dim.	Inches	Millimeters
A	3.70	94.0
B	1.89	48.0
C	1.14+0.04/-0.02	29.0+1.0/-0.5
D	3.15±0.01	80.0±0.25
E	0.67	17.0
F	0.91	23.0
G	0.16	4.0
H	0.71	18.0
J	0.51	13.0
K	0.47	12.0

Dim.	Inches	Millimeters
L	0.26 Dia.	6.5 Dia.
M	M5 Metric	M5
N	0.79	20.0
P	0.63	16.0
Q	0.28	7.0
R	0.83	21.2
S	0.30	7.5
T	0.02	0.5
U	0.110	2.8
V	0.16	4.0

6 CM300DY-24S, CM300DY-24NFH, CM300E3Y6-24NFH, CM400DY-12NF, CM400E3Y6-24NFH

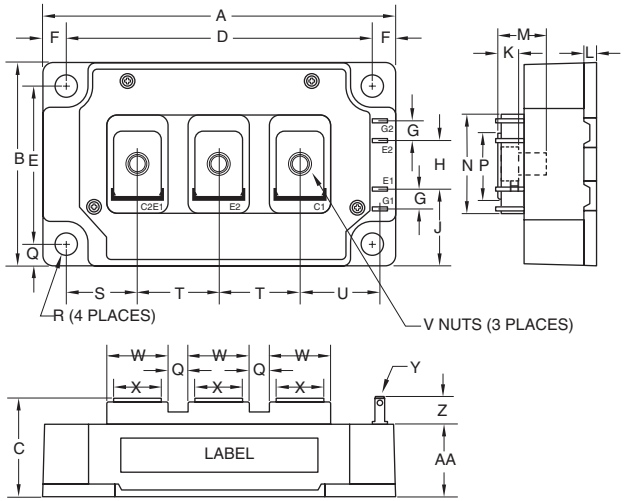

Dim.	Inches	Millimeters
A	4.25	108.0
B	2.44	62.0
C	1.18+0.4/-0.02	30.0+1.0/-0.5
D	3.66±0.01	93.0±0.25
E	1.89±0.01	48.0±0.25
F	0.29	7.5
G	0.24	6.0
J	0.689	17.5
H	0.59	15.0
K	0.244	6.2
L	0.16	4.0
M	0.56	14.2
N	1.18	30.0

Dim.	Inches	Millimeters
P	0.79	20.0
Q	0.28	7.0
R	0.26 Dia.	6.5 Dia.
S	0.85	21.5
T	0.98	25.0
U	0.94	24.0
V	M6 Metric	M6
V	0.16	4.0
W	0.71	18.0
X	0.55	14.0
Y	0.02	0.5
Z	0.33	8.5
AA	0.87	22.2

7 CM600DY-12NF

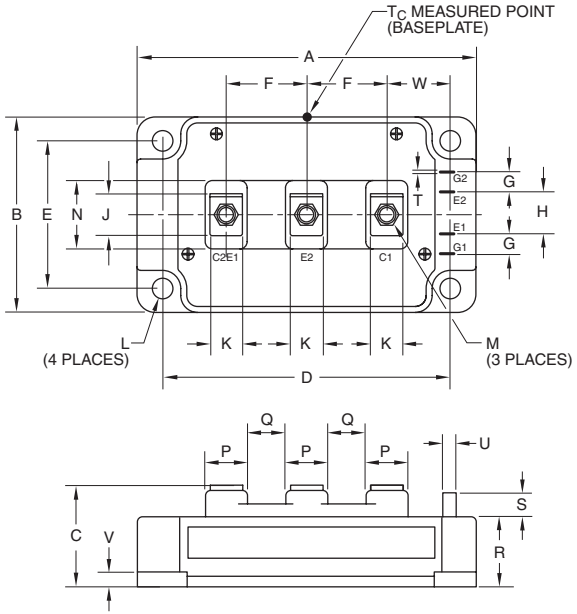

Dim.	Inches	Millimeters
A	4.33	110.0
B	3.15	80.0
C	1.14+0.04/-0.02	29.0+1.0/-0.5
D	3.66±0.01	93.0±0.25
E	2.44±0.01	62.0±0.25
F	0.98	25.0
G	0.24	6.0
H	0.59	15.0
J	0.81	20.5
K	0.55	14.0
L	0.26 Dia.	6.5 Dia.

Dim.	Inches	Millimeters
M	M6 Metric	M6
N	1.18	30.0
P	0.71	18.0
Q	0.28	7.0
R	0.83	21.2
S	0.33	8.5
T	0.02	0.5
U	0.110	2.8
V	0.16	4.0
W	0.85	21.5

8 CM100DUS-12F, CM150DUS-12F

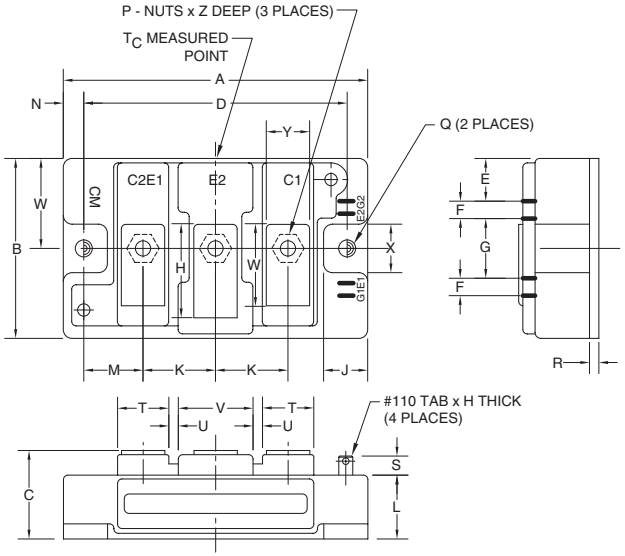

Dim.	Inches	Millimeters
A	3.70	94.0
B	1.89	48.0
C	1.18 +0.04/-0.02	30.0 +1.0/-0.5
D	3.15±0.01	80.0±0.25
E	0.43	11.0
F	0.16	4.0
G	0.71	18.0
H	1.06	27.0
J	0.53	13.5
K	0.91	23.0
L	0.83	21.2
M	0.67	17.0

Dim.	Inches	Millimeters
N	0.28	7.0
P	M6.5 Metric	M6.5
Q	0.26 Dia.	6.5 Dia.
R	0.02	4.0
S	0.30	7.5
T	0.63	16.0
U	0.10	2.5
V	1.0	25.0
W	0.94	24.0
X	0.51	13.0
Y	0.47	12.0
Z	0.47	12.0

9 CM400DY-34A

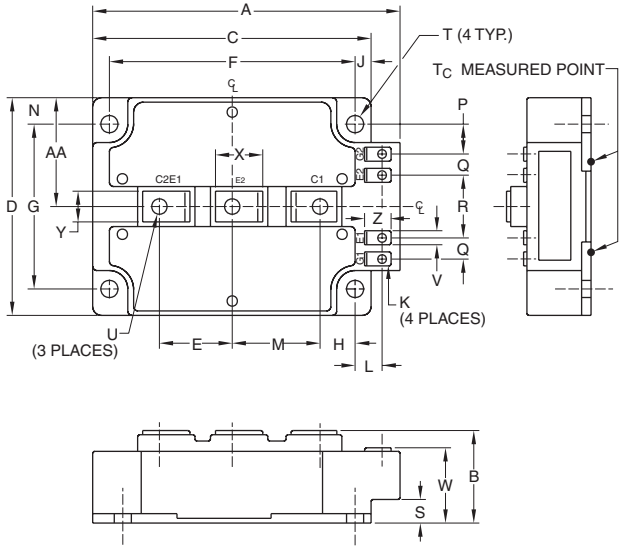

Dim.	Inches	Millimeters
A	5.51	140.0
B	1.38+0.04/-0.02	35.0+1.0/-0.5
C	5.12	130.0
D	5.12	130.0
E	1.42	36.0
F	4.33±0.01	110.0±0.25
G	4.33±0.01	110.0±0.25
H	0.54	13.8
J	0.39	10.0
K	M4 Metric	M4
L	0.45	11.5
M	1.72	43.8
N	0.39	10.0

Dim.	Inches	Millimeters
P	0.80	20.4
Q	0.57	14.5
R	1.57	40.0
S	0.31	8.0
T	0.26 Dia.	6.5 Dia.
U	M8 Metric	M8
V	0.35	9.0
W	0.96+0.04/-0.02	24.5+1.0/-0.5
X	1.02	26.0
Y	0.79	20.0
Z	0.59	15.0
AA	2.56	65.0

10 CM150DX-24S, CM300DX1-24NFJ, QID0640020, QID1230015, QIS066004, QIS1260015

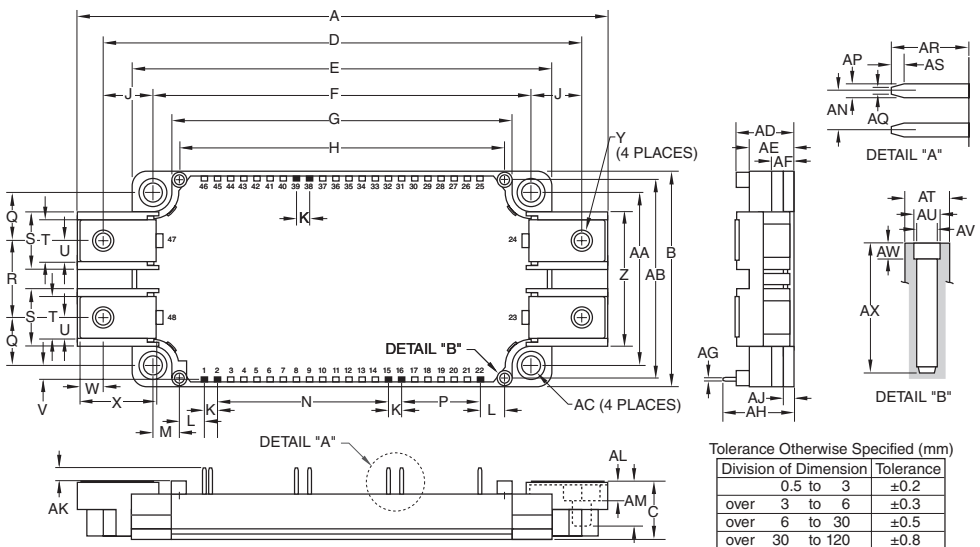

Tolerance Otherwise Specified (mm)

Division of Dimension	Tolerance
0.5 to 3	±0.2
over 3 to 6	±0.3
over 6 to 30	±0.5
over 30 to 120	±0.8
over 120 to 400	±1.2

The tolerance of size between terminals is assumed to ±0.4

Dim.	Inches	Millimeters	Dim.	Inches	Millimeters	Dim.	Inches	Millimeters
A	5.98	152.0	S	0.67	17.0	AH	0.81	20.5
B	2.44	62.0	T	0.48	12.0	AJ	0.12	3.0
C	0.67+0.04/-0.02	17.0+1.0/-0.5	U	0.24	6.0	AK	0.14	3.5
D	5.39	137.0	V	0.16	4.2	AL	0.26	6.5
E	4.79	121.7	W	0.37	6.5	AM	0.53	13.5
F	4.33±0.02	110.0±0.5	X	0.83	21.14	AN	0.15	3.81
G	3.89	99.0	Y	M6 Metric	M6	AP	0.05	1.15
H	3.72	94.5	Z	1.53	39.0	AQ	0.025	0.65
J	0.53	13.5	AA	1.97±0.02	50.0±0.5	AR	0.29	7.4
K	0.15	3.81	AB	2.26	57.5	AS	0.05	1.2
L	0.28	7.25	AC	0.22 Dia.	5.5 Dia.	AT	0.17 Dia.	4.3 Dia.
M	0.30	7.75	AD	0.67+0.04/-0.02	17.0+1.0/-0.5	AU	0.102 Dia.	2.6 Dia.
N	1.95	49.53	AE	0.51	13.0	AV	0.088 Dia.	2.25 Dia.
P	0.9	22.86	AF	0.27	7.0	AW	0.12	3.0
Q	0.55	14.0	AG	0.03	0.8	AX	0.49	12.5
R	0.87	22.0						

11 CM75RX-24S, CM100RX-12A, CM150RX-12A, CM200RX-12A

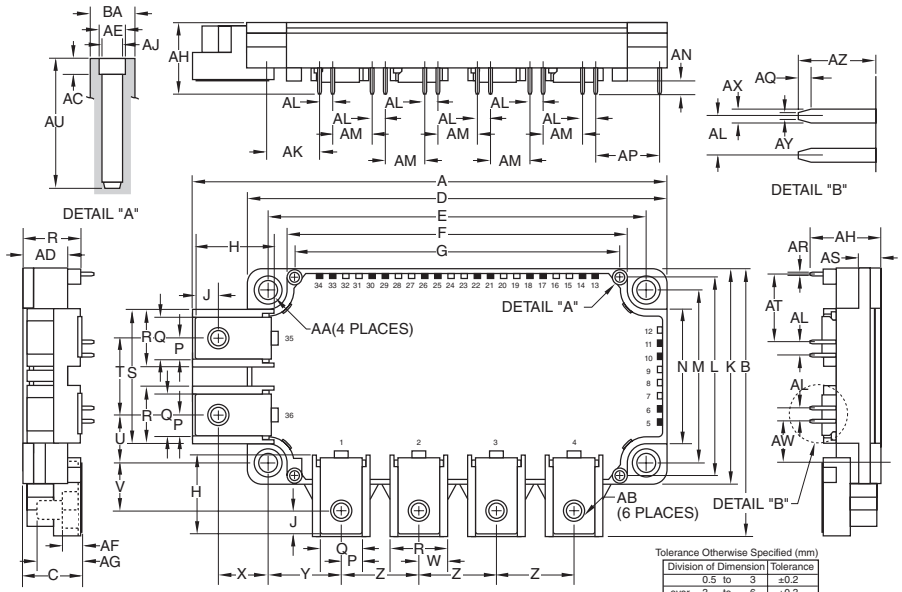

Tolerance Otherwise Specified (mm)

Division of Dimension	Tolerance
0.5 to 3	±0.2
over 3 to 6	±0.3
over 6 to 30	±0.5
over 30 to 120	±0.8
over 120 to 400	±1.2

The tolerance of size between terminals is assumed to ±0.4

Dim.	Inches	Millimeters	Dim.	Inches	Millimeters	Dim.	Inches	Millimeters
A	5.39	136.9	T	0.87	22.0	AK	0.59	15.00
B	3.03	77.1	U	0.55	14.0	AL	0.15	3.81
C	0.67+0.04/-0.02	17.0+1.0/-0.5	V	0.54	13.64	AM	0.45	11.43
D	4.79	121.7	W	0.33	8.5	AN	0.14	3.5
E	4.33±0.02	110.0±0.5	X	0.53	13.5	AP	0.75	19.05
F	3.89	99.0	Y	0.81	20.71	AQ	0.05	1.2
G	3.72	94.5	Z	0.9	22.86	AR	0.03	0.8
H	0.83	21.14	AA	0.22 Dia.	5.5 Dia.	AS	0.27	7.0
J	0.37	6.5	AB	M5 Metric	M5	AT	0.77	19.68
K	2.44	62.0	AC	0.12	3.0	AU	0.49	12.5
L	2.26	57.5	AD	0.51	13.0	AV	0.60	15.24
M	1.97±0.02	50.0±0.5	AE	0.102 Dia.	2.6 Dia.	AW	0.46	11.66
N	1.53	39.0	AF	0.21	5.4	AX	0.04	1.15
P	0.24	6.0	AG	0.49	12.5	AY	0.02	0.65
Q	0.48	12.0	AH	0.81	20.5	AZ	0.29	7.4
R	0.67	17.0	AJ	0.088 Dia.	2.25 Dia.	BA	0.17 Dia.	4.3 Dia.
S	1.53	39.0						

12 CM75RX-34SA

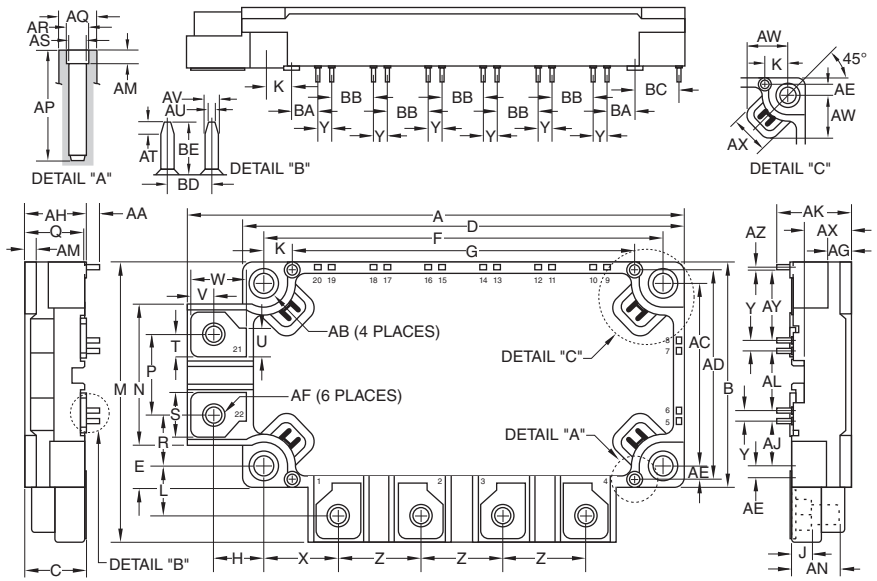

Dim.	Inches	Millimeters
A	5.39	136.9
B	2.44	62.0
C	0.67+0.04/-0.02	17.0+1.0/-0.5
D	4.79	121.7
E	0.45	11.5
F	4.33±0.02	110.0±0.5
G	3.72	94.5
H	0.53	13.5
J	0.23	5.9
K	0.30	7.75
L	0.53	13.64
M	3.02	77.1
N	1.53	39.0
P	0.87	22.0
Q	0.65	16.5
R	0.55	14.0
S	0.47	12.0
T	0.24	6.0

Dim.	Inches	Millimeters
U	0.31	8.0
V	0.37	6.5
W	0.61	15.64
X	0.81	20.71
Y	0.15±0.008	3.81±0.2
Z	0.9	22.86
AA	0.14	3.5
AB	0.22 Dia.	5.5 Dia.
AC	1.97±0.02	50.0±0.5
AD	2.26	57.5
AE	0.14	3.75
AF	M5	M5
AG	0.27	7.0
AH	0.67	17.0
AJ	0.44±0.008	11.67±0.2
AK	0.81	20.5
AL	0.60±0.008	15.24±0.2
AM	0.12	3.0

Dim.	Inches	Millimeters
AN	0.53	13.4
AP	0.49	12.5
AQ	0.18 Dia.	4.5 Dia.
AR	0.102 Dia.	2.6 Dia.
AS	0.088 Dia.	2.25 Dia.
AT	0.05	1.2
AU	0.02	0.65
AV	0.04	1.15
AW	0.54	13.7
AX	0.51	13.0
AY	0.75	19.12
AZ	0.021±0.008	0.55±0.2
BA	0.28±0.008	7.24±0.2
BB	0.43±0.008	11.42±0.2
BC	0.46±0.008	11.8±0.2
BD	0.15	3.81
BE	0.18	4.5

13 CM75TX-24S

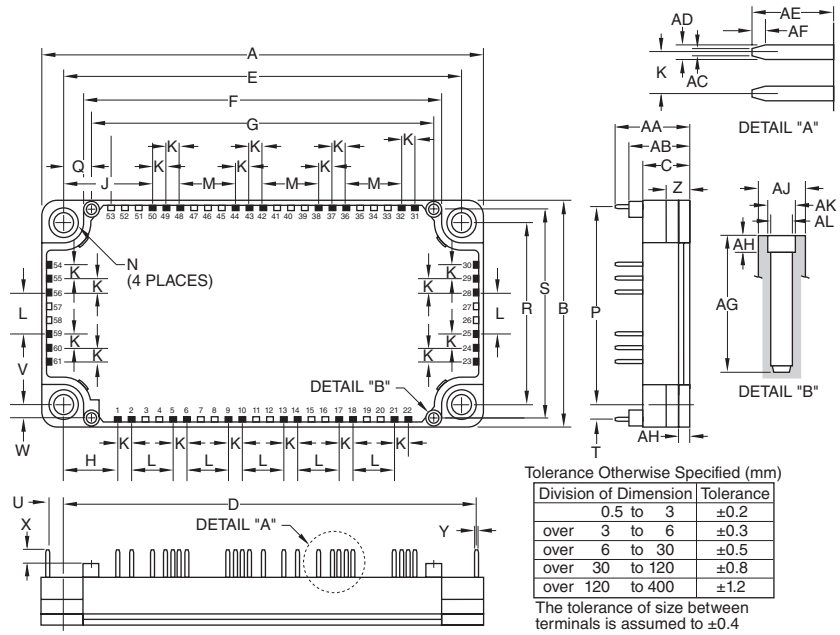

Tolerance Otherwise Specified (mm)

Division of Dimension	Tolerance
0.5 to 3	±0.2
over 3 to 6	±0.3
over 6 to 30	±0.5
over 30 to 120	±0.8
over 120 to 400	±1.2

The tolerance of size between terminals is assumed to ±0.4

Dim.	Inches	Millimeters
A	4.79	121.7
B	2.44	62.0
C	0.51	13.0
D	4.49	114.05
E	4.33±0.02	110.0±0.5
F	3.9	99.0
G	3.72	94.5
H	0.59	15.0
J	0.96	24.52
K	0.15	3.81
L	0.45	11.43
M	0.6	15.24

Dim.	Inches	Millimeters
N	0.22 Dia.	5.5 Dia.
P	2.13	54.2
Q	0.30	7.75
R	1.97±0.02	50.0±0.5
S	2.26	57.5
T	0.165	4.2
U	0.16	4.06
V	0.46	11.66
W	0.14	3.75
X	0.14	3.5
Y	0.03	0.8
Z	0.28	7.0

Dim.	Inches	Millimeters
AA	0.81	20.5
AB	0.67	17.0
AC	0.03	0.65
AD	0.05	1.15
AE	0.29	7.4
AF	0.047	1.2
AG	0.49	12.5
AH	0.12	3.0
AJ	0.17 Dia.	4.3 Dia.
AK	0.102 Dia.	2.6 Dia.
AL	0.088 Dia.	2.25 Dia.

14 CM750HG-130H, CM1200HG-90R, CM1500HG-66R

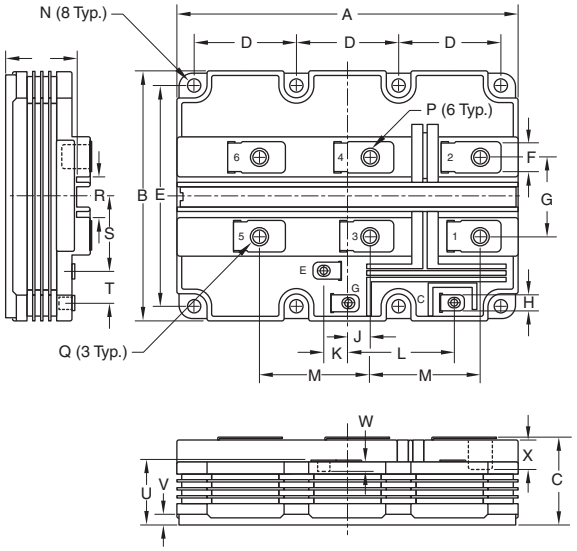

Dim.	Inches	Millimeters
A	7.5±0.02	190.0±0.5
B	5.51±0.02	140.0±0.5
C	1.88+0.04/-0.02	48.0+1.0/-0.5
D	2.24±0.01	57.0±0.25
E	4.88±0.01	124.0±0.25
F	0.67+0.04/-0.02	17.0+1.0/-0.5
G	1.73±0.012	44.0±0.3
H	0.35±0.008	9.0±0.2
J	0.47±0.012	12.0±0.3
K	0.55±0.012	14.0±0.3
L	2.33±0.012	59.2±0.3

Dim.	Inches	Millimeters
M	2.42±0.012	61.2±0.3
N	0.28 Dia.	7.0 Dia.
P	M8 Metric	M8
Q	M4 Metric	M4
R	0.86±0.012	22.0±0.3
S	1.61±0.012	41.0±0.3
T	0.71±0.012	18.0±0.3
U	1.50±0.02	38.0±0.5
V	0.20±0.008	5.0±0.2
W	0.30 Min.	7.7 Min.
X	0.65 Min.	16.5 Min.

15 CM800HC-90R

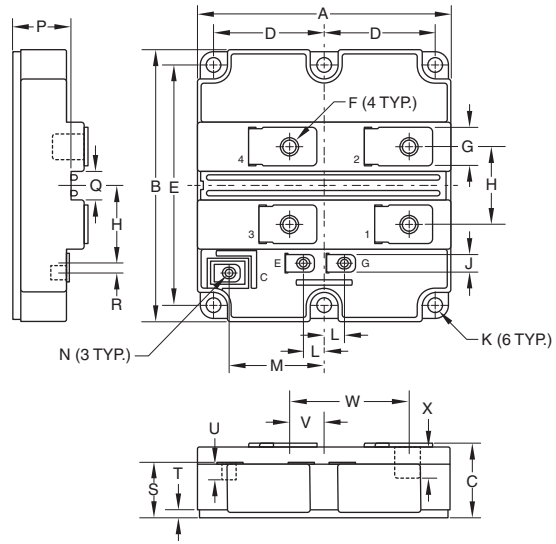

Dim.	Inches	Millimeters
A	2.54±0.02	130.0±0.5
B	5.51±0.02	140.0±0.5
C	1.50+0.04/-0.02	38.0+1.0/-0.5
D	2.24±0.01	57.0±0.25
E	4.88±0.01	124.0±0.25
F	M8 Metric	M8
G	0.78±0.012	20.0±0.3
H	1.57±0.012	40.0±0.3
J	0.35±0.008	9.0±0.2
K	0.28 Dia.	7.0 Dia.
L	0.092±0.012	10.65±0.3

Dim.	Inches	Millimeters
M	1.92±0.012	48.8±0.3
N	M4 Metric	M4
P	1.16±0.02	29.5±0.5
Q	0.59±0.012	15.0±0.3
R	0.86±0.012	22.0±0.3
S	1.10±0.02	28.0±0.5
T	0.20±0.008	5.0±0.2
U	0.30 Min.	7.7 Min.
V	0.71±0.012	18.0±0.3
W	2.42±0.012	61.5±0.3
X	0.65 Min.	16.5 Min.

16 CM450DY-24S, CM600DY-24S

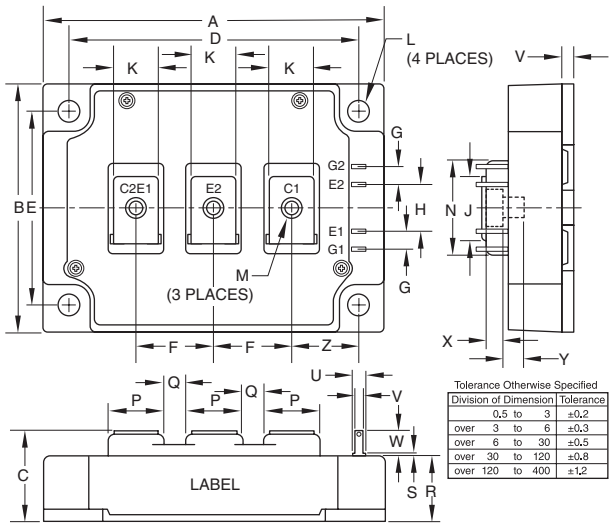

Tolerance Otherwise Specified

Division of Dimension	Tolerance
0.5 to 3	±0.2
over 3 to 6	±0.3
over 6 to 30	±0.5
over 30 to 120	±0.8
over 120 to 400	±1.2

Dim.	Inches	Millimeters
A	4.33	110.0
B	3.15	80.0
C	1.14+0.04/-0.02	29.0+1.0/-0.5
D	3.66±0.01	93.0±0.25
E	2.44±0.01	62.0±0.25
F	0.98	25.0
G	0.24	6.0
H	0.59	15.0
J	0.81	20.5
K	0.55	14.0
L	0.26 Dia.	Dia. 6.5
M	M6 Metric	M6

Dim.	Inches	Millimeters
N	1.18	30.0
P	0.71	18.0
Q	0.28	7.0
R	0.83	21.2
S	0.33	8.5
T	0.0157	0.4
U	0.110	2.8
V	0.16	4.0
W	0.30	7.5
X	0.21	5.3
Y	0.47	12.0
Z	0.85	21.5

17 CM1200HC-90R

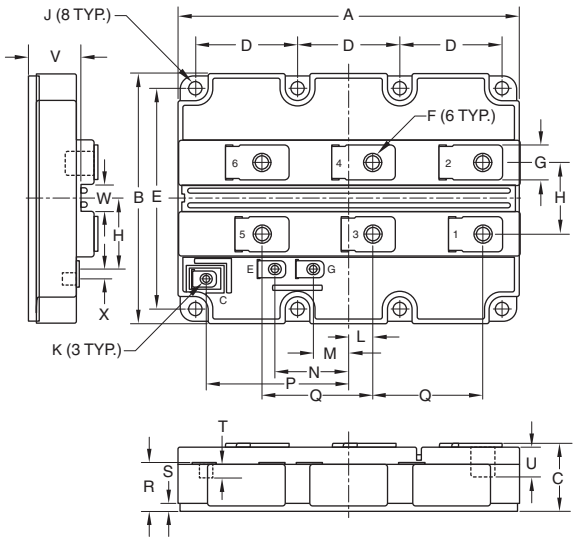

Dim.	Inches	Millimeters
A	7.5±0.02	190.0±0.5
B	5.51±0.02	140.0±0.5
C	1.50+0.04/-0.02	38.0+1.0/-0.5
D	2.24±0.01	57.0±0.25
E	4.88±0.01	124.0±0.25
F	M8 Metric	M8
G	0.78+0.04/-0.02	20.0+1.0/-0.5
H	1.57±0.012	40.0±0.3
J	0.28 Dia.	7.0 Dia.
K	M4 Metric	M4
L	0.51±0.012	13.0±0.3

Dim.	Inches	Millimeters
M	0.79±0.012	20.25±0.3
N	1.62±0.012	41.25±0.3
P	3.12±0.012	79.4±0.3
Q	2.42±0.012	61.5±0.3
R	1.10±0.02	28.0±0.5
S	0.20±0.008	5.0±0.2
T	0.30 Min.	7.7 Min.
U	0.65 Min.	16.5 Min.
V	0.20±0.008	5.0±0.2
W	0.59±0.02	15.0±0.5
X	0.20±0.012	5.2±0.3

18 CM100DU-24NFH, CM150DU-24NFH, CM200DU-12NFH

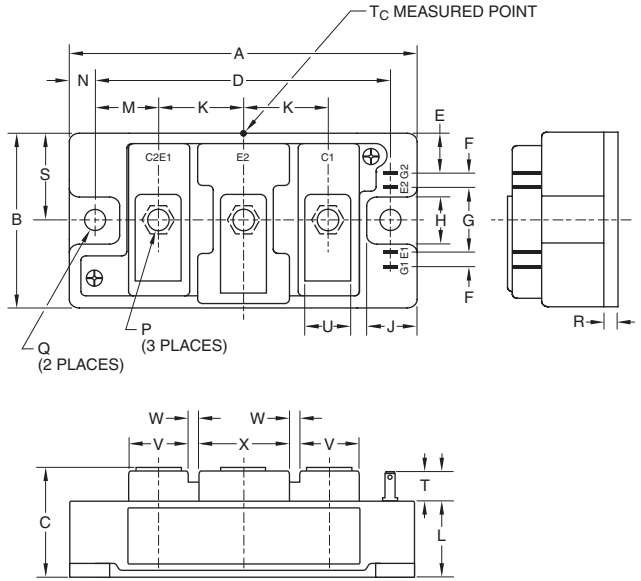

Dim.	Inches	Millimeters
A	3.70	94.0
B	1.89	48.0
C	1.18+0.004/-0.02	30.0+1.0/-0.5
D	3.15±0.01	80.0±0.25
E	0.43	11.0
F	0.16	4.0
G	0.71	18.0
H	0.51	13.0
J	0.53	13.5
K	0.91	23.0
L	0.83	21.2

Dim.	Inches	Millimeters
M	0.67	17.0
N	0.28	7.0
P	M5 Metric	M5
Q	0.26 Dia.	6.5 Dia.
R	0.02	4.0
S	0.94	24.0
T	0.3	7.5
U	0.47	12.0
V	0.63	16.0
W	0.1	2.5
X	0.98	25.0

19 CM200DU-24NFH, CM300DU-12NFH, CM300DU-24NFH, CM400DU-12NFH, CM600E3U-12NFH

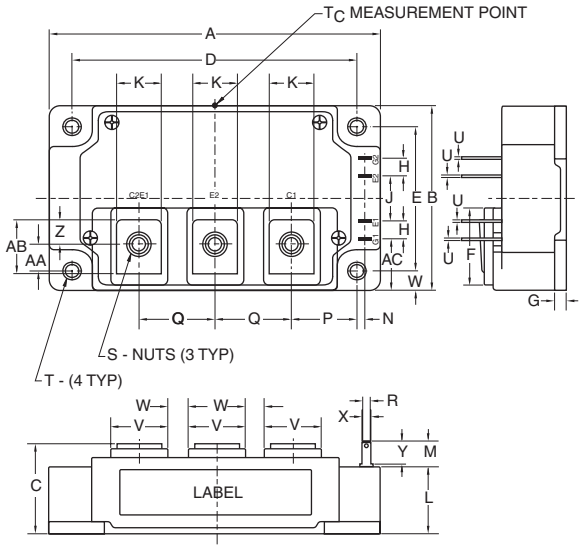

Dim.	Inches	Millimeters
A	4.25	108.0
B	2.44	62.0
C	1.14+0.04/-0.02	29.0+1.0/-0.5
D	3.66±0.01	93.0±0.25
E	1.88±0.01	48.0±0.25
F	0.67	25.7
G	0.16	4.0
H	0.24	6.0
J	0.59	15.0
K	0.55	14.0
L	0.87	22.0
M	0.33	8.5
N	0.10	2.5
P	0.85	21.5

Dim.	Inches	Millimeters
Q	0.98	25.0
R	0.110	2.8
S	M6 Metric	M6
T	0.26 Dia.	6.5 Dia.
U	0.002	0.5
V	0.71	18.0
W	0.28	7.0
X	0.16	4.0
Y	0.3	7.5
Z	0.325	8.25
AA	0.624	8.85
AB	0.709	18.0
AC	0.69	17.5

20 CM75DY-34A, CM100DY-24A, CM100DY-34A, CM150DY-34A

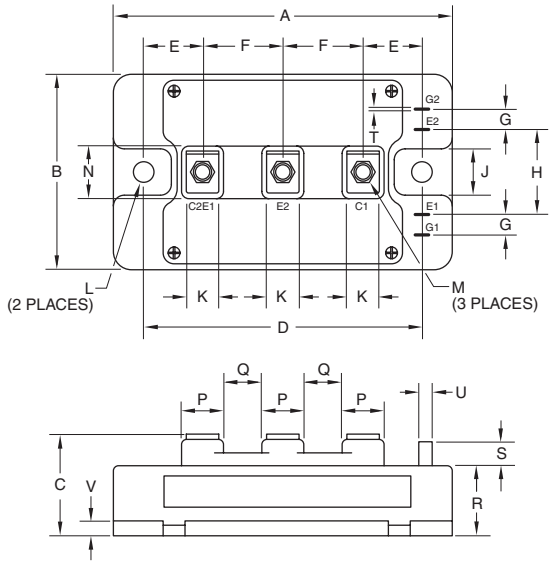

Dim.	Inches	Millimeters
A	3.70	94.0
B	1.89	48.0
C	1.14+0.04/-0.02	29.0+1.0/-0.5
D	3.15±0.01	80.0±0.25
E	0.67	17.0
F	0.91	23.0
G	0.16	4.0
H	0.71	18.0
J	0.51	13.0
K	0.47	12.0

Dim.	Inches	Millimeters
L	0.26 Dia.	6.5 Dia.
M	M5 Metric	M5
N	0.79	20.0
P	0.63	16.0
Q	0.28	7.0
R	0.83	21.2
S	0.30	7.5
T	0.02	0.5
U	0.110	2.8
V	0.16	4.0

21 CM200DY-34A

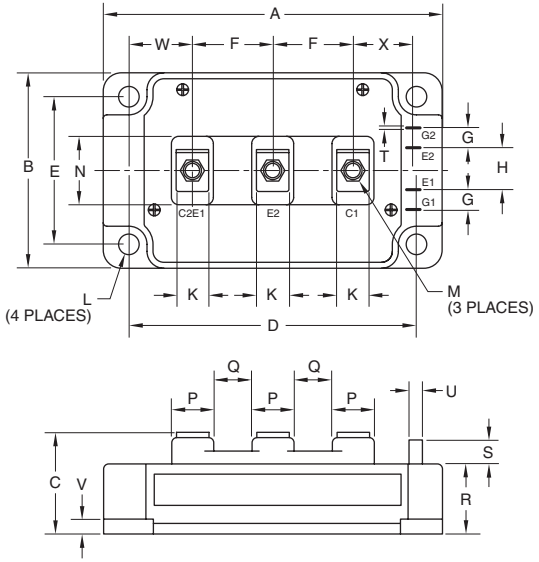

Dim.	Inches	Millimeters
A	4.25	108.0
B	2.44	62.0
C	1.18+0.04/-0.02	30.0+1.0/-0.5
D	3.66±0.01	93.0±0.25
E	1.89±0.01	48.0±0.25
F	0.98	25.0
G	0.24	6.0
H	0.59	15.0
K	0.55	14.0
L	0.26 Dia.	6.5 Dia.
M	M6 Metric	M6

Dim.	Inches	Millimeters
N	1.18	30.0
P	0.71	18.0
Q	0.28	7.0
R	0.87	22.2
S	0.33	8.5
T	0.02	0.5
U	0.110	2.8
V	0.16	4.0
W	0.85	21.5
X	0.94	24.0

22 CM300DY-34A, CM600DY-24A

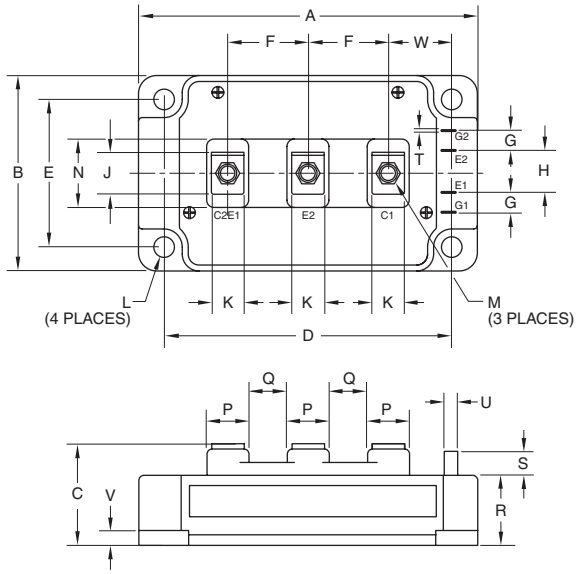

Dim.	Inches	Millimeters
A	4.33	110.0
B	3.15	80.0
C	1.14+0.04/-0.02	29.0+1.0/-0.5
D	3.66±0.01	93.0±0.25
E	2.44±0.01	62.0±0.25
F	0.98	25.0
G	0.24	6.0
H	0.59	15.0
J	0.81	20.5
K	0.55	14.0
L	0.26 Dia.	6.5 Dia.

Dim.	Inches	Millimeters
M	M6 Metric	M6
N	1.18	30.0
P	0.71	18.0
Q	0.28	7.0
R	0.83	21.2
S	0.33	8.5
T	0.02	0.5
U	0.110	2.8
V	0.16	4.0
W	0.85	21.5

23 CM900DUC-24S, CM1000DUC-34SA, CM1000E3U-34NF, CM1400DUC-24S

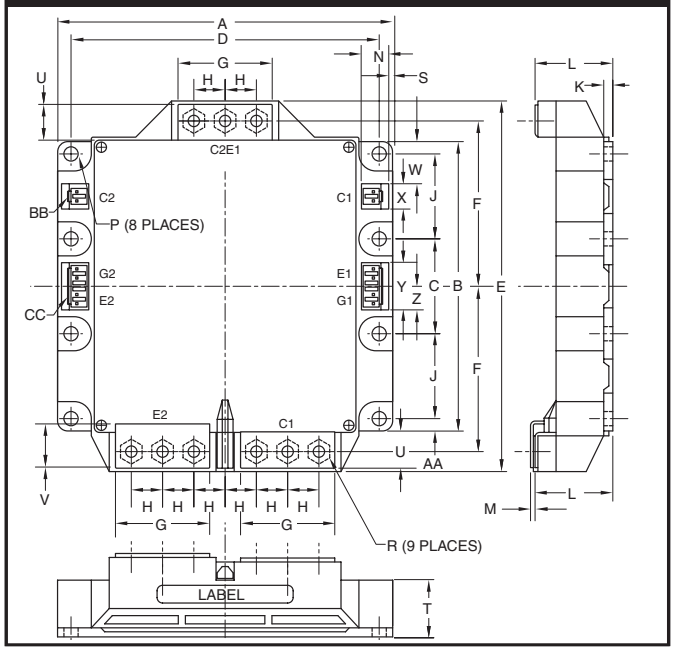

Dim.	Inches	Millimeters
A	5.91	150.0
B	5.10	129.5
C	1.67±0.01	42.5±0.25
D	5.41±0.01	137.5±0.25
E	6.54	166.0
F	2.91±0.01	74.0±0.25
G	1.65	42.0
H	0.55	14.0
J	1.50±0.01	38.0±0.25
K	0.16	4.0
L	1.36 +0.04/-0.02	34.6 +1.0/-0.5

Dim.	Inches	Millimeters
M	0.075±0.008	1.9±0.2
N	0.47	12.0
P	0.26	6.5
R	M6 Metric	M6
S	0.08	2.0
T	0.99	25.1
U	0.62	15.7
V	0.71	18.0
W	0.75	19.0
X	0.43	11.0
Y	0.83	21.0
Z	0.41	10.5
AA	0.22	5.5

Housing Type (J.S.T. MFG. CO. LTD)
BB = VHR-2N
CC = VHR-5N

24 CM400DU-24NFH, CM400DU-24NFJ, CM600DU-12NFH, CM600DU-24NFH

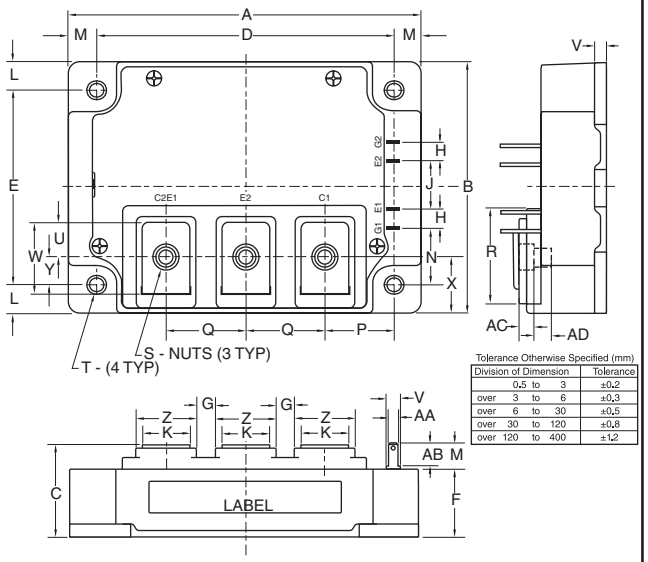

Tolerance Otherwise Specified (mm)

Division of Dimension				Tolerance
	0.5	to	3	±0.2
over	3	to	6	±0.3
over	6	to	30	±0.5
over	30	to	120	±0.8
over	120	to	400	±1.2

Dim.	Inches	Millimeters
A	4.33	110.0
B	3.15	80.0
C	1.14+0.04/-0.01	29.0+1.0/-0.5
D	3.66±0.01	93.0±0.25
E	2.44±0.01	62.0±0.25
F	0.83	21.2
G	0.28	7.0
H	0.24	6.0
J	0.59	15.0
K	0.55	14.0
L	0.35	9.0
M	0.33	8.5
N	0.69	17.5
P	0.85	21.5

Dim.	Inches	Millimeters
Q	0.98	25.0
R	1.23	31.4
S	M6 Metric	M6
T	0.26 Dia.	6.5 Dia.
U	0.4	10.0
V	0.16	4.0
W	0.87	22.2
X	0.72	18.25
Y	0.36	9.25
Z	0.71	18.0
AA	0.11	2.8
AB	0.29	7.5
AC	0.21	5.3
AD	0.47	12.0

25 CM800DY-24S

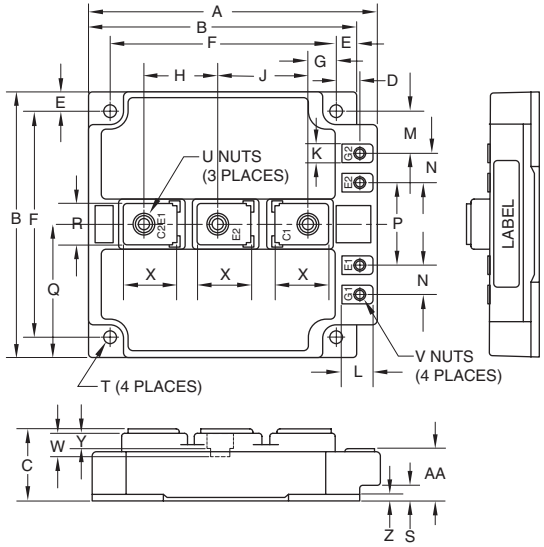

Dim.	Inches	Millimeters
A	5.51	140.0
B	5.12	130.0
C	1.38+0.04/-0.02	35.0+1.0/-0.5
D	0.45	11.5
E	0.39	10.0
F	4.33±0.001	110.0±0.25
G	0.54	13.8
H	1.42	36.0
J	1.72	43.8
K	0.35	9.0
L	0.59	15.0
M	0.80	20.4
N	0.57	14.5

Dim.	Inches	Millimeters
P	1.57	40.0
Q	2.56	65.0
R	0.79	20.0
S	0.32	8.0
T	0.26 Dia.	6.5 Dia.
U	M8 Metric	M8
V	M4 Metric	M4
W	0.43	11.1
X	1.02	26.0
Y	0.29	7.3
Z	0.16	4.0
AA	0.96+0.04/-0.02	24.5+1.0/-0.5

26 CM800HA-34H, CM1200HA-34H

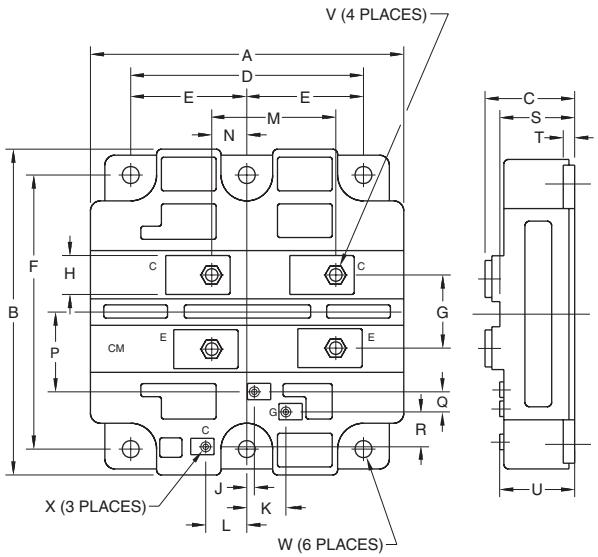

Dim.	Inches	Millimeters
A	5.12	130.0
B	5.51	140.0
C	1.50+0.04/-0	38.0+1.0/-0
D	4.49	114.0
E	2.24±0.01	57.0±0.25
F	4.88±0.01	124.0±0.25
G	1.18	30.0
H	0.79	20.0
J	0.10	2.5
K	0.73	18.5
L	0.65	16.5

Dim.	Inches	Millimeters
M	2.42	61.5
N	0.71	18.0
P	1.38	35.0
Q	0.43	11.0
R	0.57	14.5
S	1.24	31.5
T	0.20	5.0
U	1.10+0.04/-0	28.0+1.0/-0
V	M8 Metric	M8
W	0.28 Dia.	7.0 Dia.
X	M4 Metric	M4

27 CM1200E4C-34N, CM1800HC-34N, CM2400HC-34N

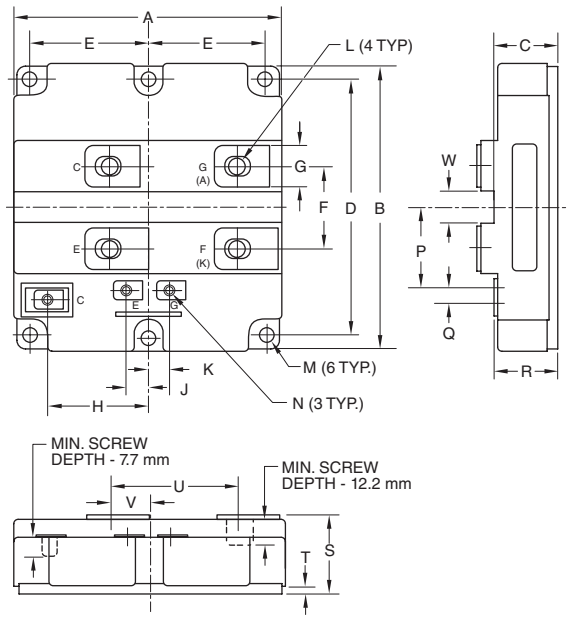

Dim.	Inches	Millimeters
A	5.12±0.02	130.0±0.5
B	5.51±0.02	140.0±0.5
C	1.16±0.02	29.5±0.5
D	4.88±0.004	124.0±0.1
E	2.24±0.004	57.0±0.1
F	1.57±0.008	40.0±0.2
G	0.79±0.004	20.0±0.1
H	1.92±0.008	48.8±0.2
J	0.42±0.008	10.65±0.2
K	0.41±0.008	10.35±0.2
L	M8 Metric	M8

Dim.	Inches	Millimeters
M	0.28 Dia.	7.0 Dia.
N	M4 Metric	M4
P	1.57±0.008	40.0±0.2
Q	0.25±0.008	5.2±0.2
R	0.10+0.039/-0.0	28.0+1.0/-0.0
S	1.45+0.039/-0.0	38.0+1.0/-0.0
T	0.20±0.008	5.0±0.2
U	2.42±0.012	61.5±0.3
V	0.71±0.008	18.0±0.2
W	0.59±0.008	15.0±0.2

28 CM1200DC-34S, CM1200DB-34N, CM1200DC-34N

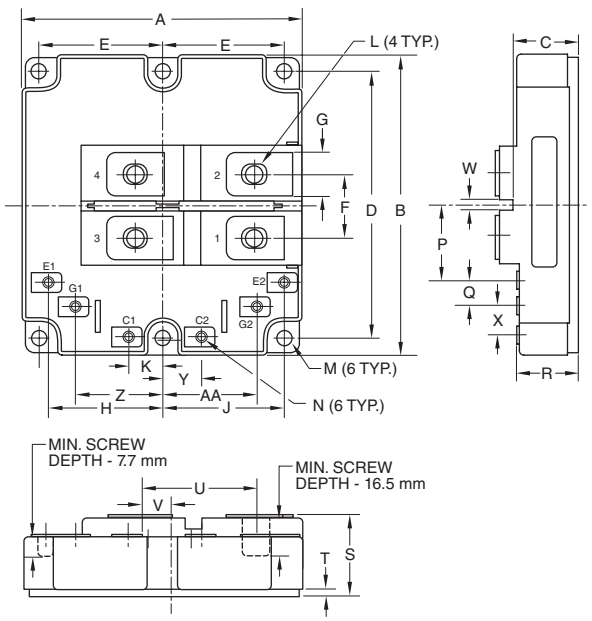

Dim.	Inches	Millimeters
A	5.12±0.02	130.0±0.5
B	5.51±0.02	140.0±0.5
C	1.16±0.02	29.5±0.5
D	4.88±0.009	124.0±0.25
E	2.24±0.009	57.0±0.25
F	1.18±0.008	30.0±0.2
G	0.79±0.004	20.0±0.1
H	2.09±0.008	53.0±0.2
J	2.24±0.008	57.0±0.2
K	0.63±0.008	16.0±0.2
L	M8 Metric	M8
M	0.28 Dia.	7.0 Dia.
N	M4 Metric	M4

Dim.	Inches	Millimeters
P	1.38±0.008	35.0±0.2
Q	0.2±0.008	5.0±0.2
R	0.10+0.039/-0.0	28.0+1.0/-0.0
S	1.45+0.039/-0.0	38.0+1.0/-0.0
T	0.20±0.008	5.0±0.2
U	2.17±0.012	55.2±0.3
V	0.466±0.008	11.85±0.2
W	0.2±0.008	5.0±0.2
X	0.55±0.008	14.0±0.2
Y	0.71±0.008	18.0±0.2
Z	1.57±0.008	40.0±0.2
AA	1.73±0.008	44.0±0.2

29 CM400HA-24A, CM500HA-34A , CM600HA-24A

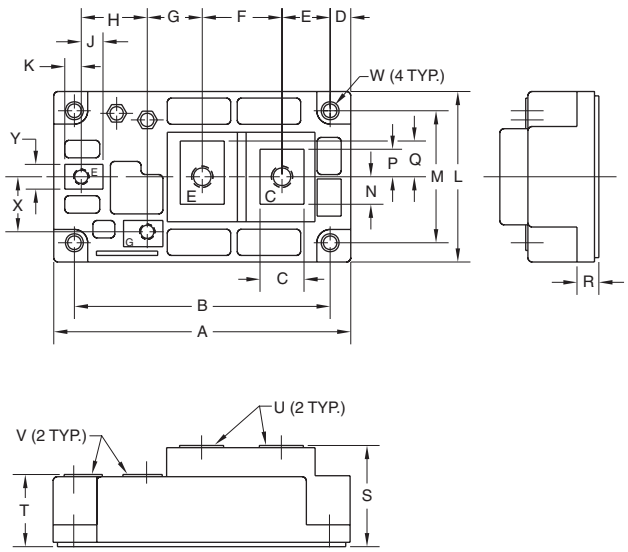

Dim.	Inches	Millimeters
A	4.25	108.0
B	3.66	93.0
C	0.63	16.0
D	0.30	7.5
E	0.69	17.5
F	1.14	29.0
G	0.79	20.0
H	0.94	24.0
J	0.31	7.9
K	0.24	62.0
L	2.44	62.0
M	1.89	48.0

Dim.	Inches	Millimeters
N	0.39	10.0
P	0.39	10.0
Q	0.51	13.0
R	0.33	8.5
S	1.42	36.0
T	1.02	25.8
U	M6 Metric	M6
V	M4 Metric	M4
W	0.256 Dia.	6.5 Dia.
X	0.79	20.0
Y	0.35	9.0

30 CM800E2C-66H, CM800E6C-66H, CM900HB-90H, CM900HC-90H, CM1000E4C-66R, CM1200HC-66H, CM1500HC-66R, CM1800HCB-34N, CM2400HCB-34N

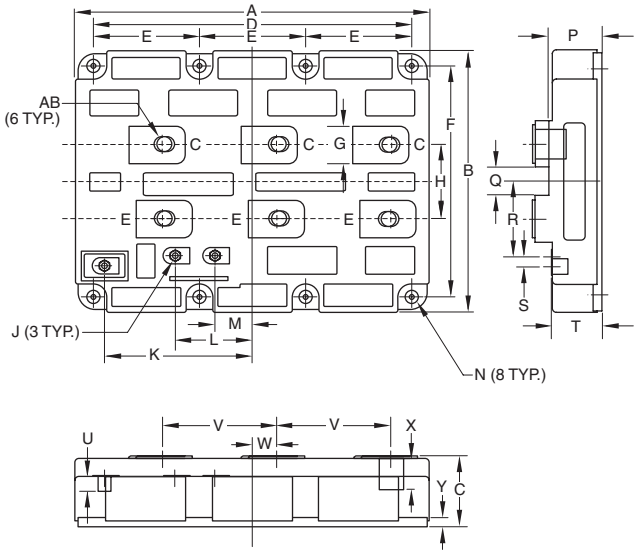

Dim.	Inches	Millimeters
A	7.5±0.02	190.0±0.5
B	5.51±0.02	140.0±0.5
C	1.50+0.04/-0	38.0+1.0/-0
D	6.73	171.0
E	2.24±0.004	57.0±0.1
F	4.88±0.004	124.0±0.1
G	0.79+0.039/-0.008	20.0+1.0/-0.2
H	1.57±0.008	40.0±0.2
J	M4 Metric	M4
K	3.13±0.012	79.4±0.3
L	1.62±0.012	41.25±0.3
M	0.80±0.008	20.25±0.2

Dim.	Inches	Millimeters
N	0.27 Dia.	7.0 Dia.
P	1.16±0.02	29.5±0.5
Q	0.59±0.008	15.0±0.2
R	1.57±0.012	40.0±0.3
S	0.20±0.008	5.2±0.2
T	1.10+0.04/-0	28.0+1.0/-0.0
U	0.30 Min.	7.7 Min.
V	2.42±0.012	61.5±0.3
W	0.51±0.008	13.0±0.2
X	0.65 Min.	16.5 Min.
Y	0.20±0.006	5.0±0.15

31 CM600DY-34H, CM800DZ-34H

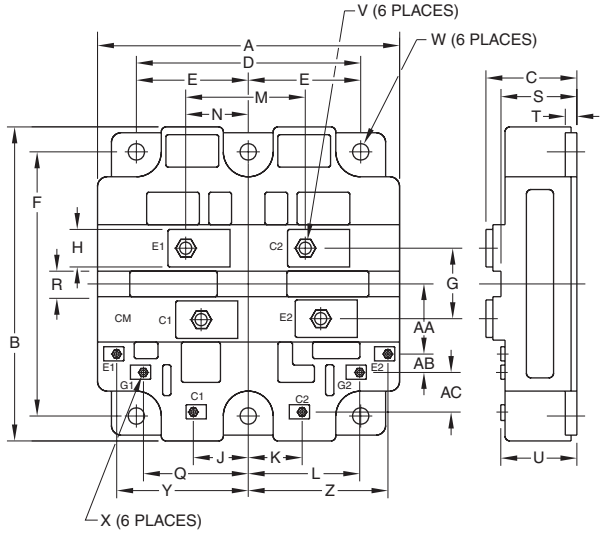

Dim.	Inches	Millimeters
A	5.12	130.0
B	5.51	140.0
C	1.50+0.08/-0	38.0+2.0/-0
D	4.49	114.0
E	2.24±0.01	57.0±0.25
F	4.88±0.01	124.0±0.25
G	1.18	30.0
H	0.79	20.0
J	0.63	16.0
K	0.71	18.0
L	1.73	44.0
M	2.17	55.2
N	0.47	11.85

Dim.	Inches	Millimeters
Q	1.58	40.0
R	0.20	5.0
S	1.24	31.5
T	0.20	5.0
U	1.10+0.08/-0	28.0+2.0/-0
V	M8 Metric	M8
W	0.28 Dia.	7.0 Dia.
X	M4 Metric	M4
Y	2.09	53.0
Z	2.24	57.0
AA	1.38	35.0
AB	0.45	11.5
AC	0.55	14.0

32 CM600E2Y-34H

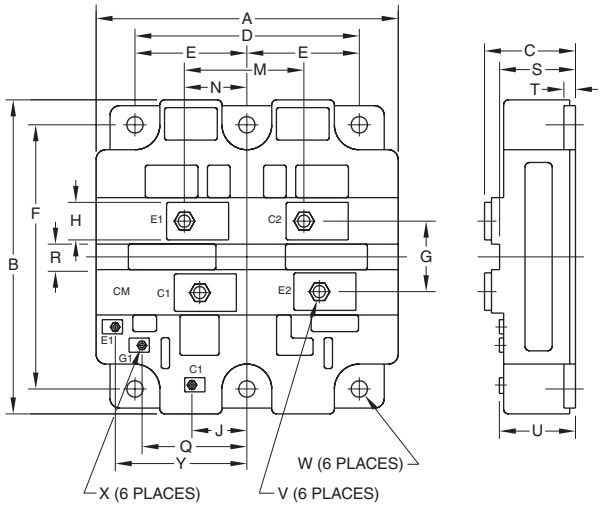

Dim.	Inches	Millimeters
A	5.12	130.0
B	5.51	140.0
C	1.50+0.04/-0	38.0+1.0/-0
D	4.49	114.0
E	2.24±0.01	57.0±0.25
F	4.88±0.01	124.0±0.25
G	1.18	30.0
H	0.79	20.0
J	0.63	16.0
M	2.17	55.2
N	0.47	11.85
Q	1.58	40.0

Dim.	Inches	Millimeters
R	0.20	5.0
S	1.24	31.5
T	0.20	5.0
U	1.10+0.04/-0	28.0+1.0/-0
V	M8 Metric	M8
W	0.28 Dia.	7.0 Dia.
X	M4 Metric	M4
Y	2.09	53.0
AA	1.38	35.0
AB	0.45	11.5
AC	0.55	14.0

33 CM400HB-90H, CM600HB-90H, CM800HB-66H

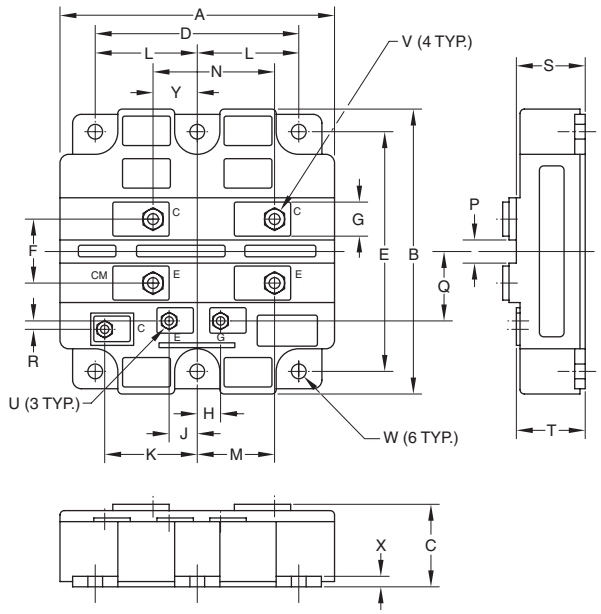

Dim.	Inches	Millimeters
A	5.12	130.0
B	5.51	140.0
C	1.50	38.0
D	4.48	114.0
E	4.88±0.01	124.0±0.25
F	1.57	40.0
G	0.79	20.0
H	0.41	10.35
J	0.42	10.65
K	1.92	48.8
L	2.24±0.01	57.0±0.25
M	1.71	43.5

Dim.	Inches	Millimeters
N	2.42	61.5
P	0.59	15.0
Q	1.57	40.0
R	0.20	5.2
S	1.16	29.5
T	1.10	28.0
U	M4 Metric	M4
V	M8 Metric	M8
W	0.28 Dia.	7.0 Dia.
X	0.20	5.0
Y	0.71	18.0

34 CM400DY-66H

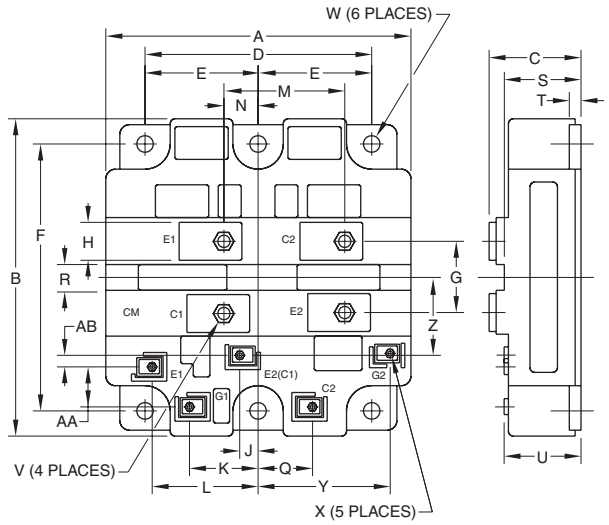

Dim.	Inches	Millimeters
A	5.12	130.0
B	5.51	140.0
C	1.50+0.08/-0	38.0+2.0/-0
D	4.49	114.0
E	2.24±0.01	57.0±0.25
F	4.88±0.01	124.0±0.25
G	1.58	40.0
H	0.79	20.0
J	0.28	7.2
K	1.43	36.3
L	1.92	48.8
M	2.42	61.5
N	0.71	18.0

Dim.	Inches	Millimeters
Q	0.97	24.5
R	0.59	15.0
S	1.18	30.0
T	0.20	5.0
U	1.10+0.08/-0	28.0+2.0/-0
V	M8 Metric	M8
W	0.28 Dia.	7.0 Dia.
X	M4 Metric	M4
Y	2.11	53.6
Z	1.56	39.5
AA	0.59	15.0
AB	0.22	5.7

35 CM200HG-130H , CM400HG-66H

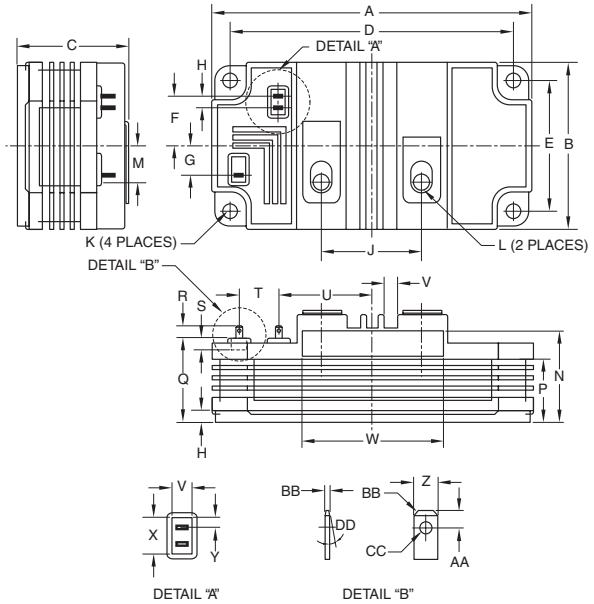

Dim.	Inches	Millimeters
A	5.51	140.0
B	2.87	73.0
C	1.89+0.04/-0.0	48.0+1.0/-0.0
D	4.88	124.0
E	2.24	57.0
F	0.85	21.6
G	0.51	12.9
H	0.20	5.0
J	1.73	44.0
K	M6 Metric	M6
L	M8 Metric	M8
M	0.64	16.2
N	1.59	40.4
P	1.10	28.0

Dim.	Inches	Millimeters
R	0.22	5.5
S	0.16	4.0
T	0.68	17.4
U	1.61	41.0
V	0.24	6.0
W	2.44	62.0
X	0.47	12.0
Y	0.14	3.5
Z	0.11	2.8
AA	0.06	1.6
BB	0.02	0.5
CC	0.05 Dia.	1.2 Dia.
DD	10°	10°

36 CM400E2G-130H, CM400E4G-130H, CM600HG-130H, CM900HG-90H, CM1200HG-66H

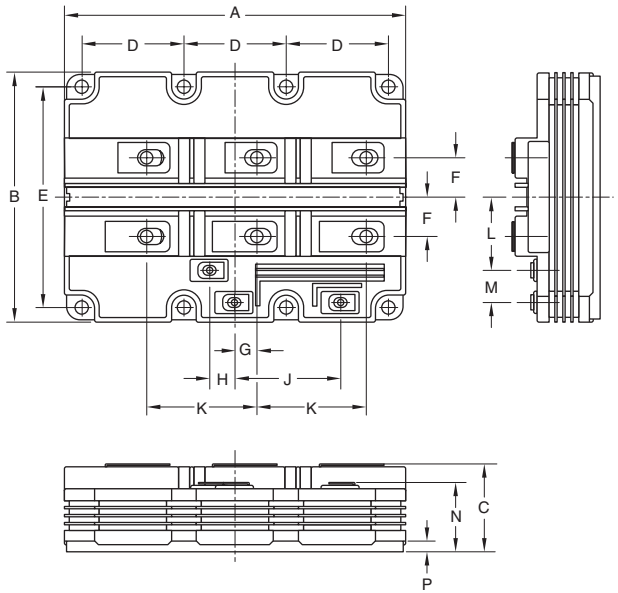

Dim.	Inches	Millimeters
A	7.48	190.0
B	5.51	140.0
C	1.89	48.0
D	2.24	57.0
E	4.88±0.01	124.0±0.25
F	0.87	22.0
G	0.47	12.0

Dim.	Inches	Millimeters
H	0.55	14.0
J	2.33	59.2
K	2.41	61.2
L	1.61	41.0
M	0.71	18.0
N	1.50	38.0
P	0.20	5.0

37 QIC6508001, QID3310005, QID3320002, QID4515001, QID4515002, QID4520002, QID6508001, QIF4515002

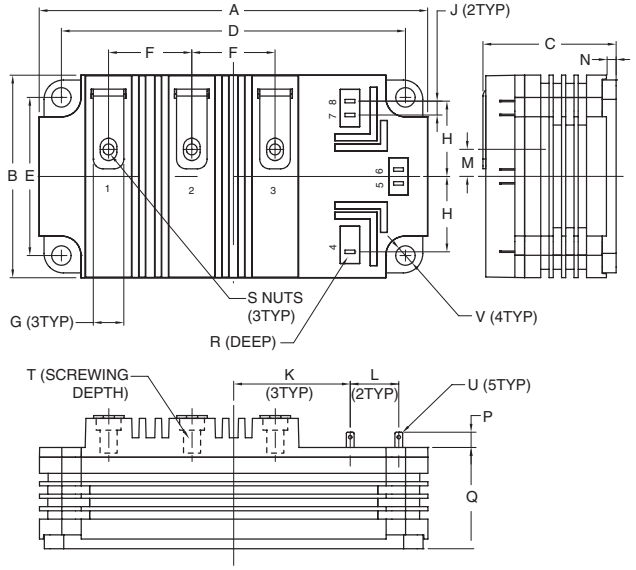

Dim.	Inches	Millimeters
A	5.51	140.0
B	2.87	73.0
C	1.89	48.0
D	4.88±0.01	124.0±0.25
E	2.24±0.01	57.0±0.25
F	1.18	30.0
G	0.43	11.0
H	1.07	27.15
J	0.20	5.0
K	1.65	42.0

Dim.	Inches	Millimeters
L	0.69±0.01	17.5±0.25
M	0.38	9.75
N	0.20	5.0
P	0.22	5.5
Q	1.44	36.5
R	0.16	4.0
S	M6 Metric	M6
T	0.63 Min.	1.6 Min.
U	0.11 x 0.02	2.8 x 0.5
V	0.28 Dia.	7.0 Dia.

38 CM1800DY-34S, CM2500DY-24S

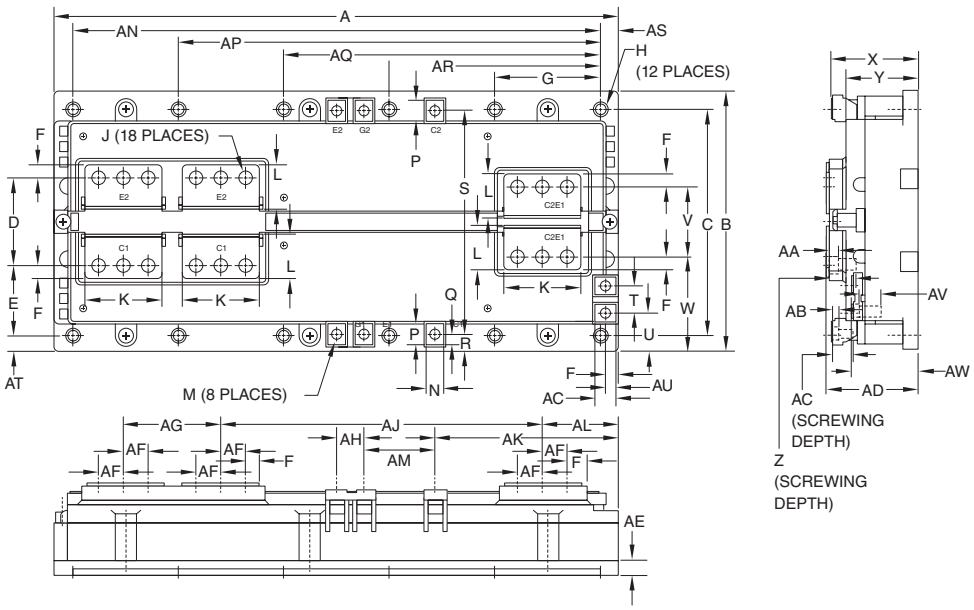

39 CM450DXL-34SA,CM600DXL-24S, CM600DXL-34SA, CM1000DXL-24S

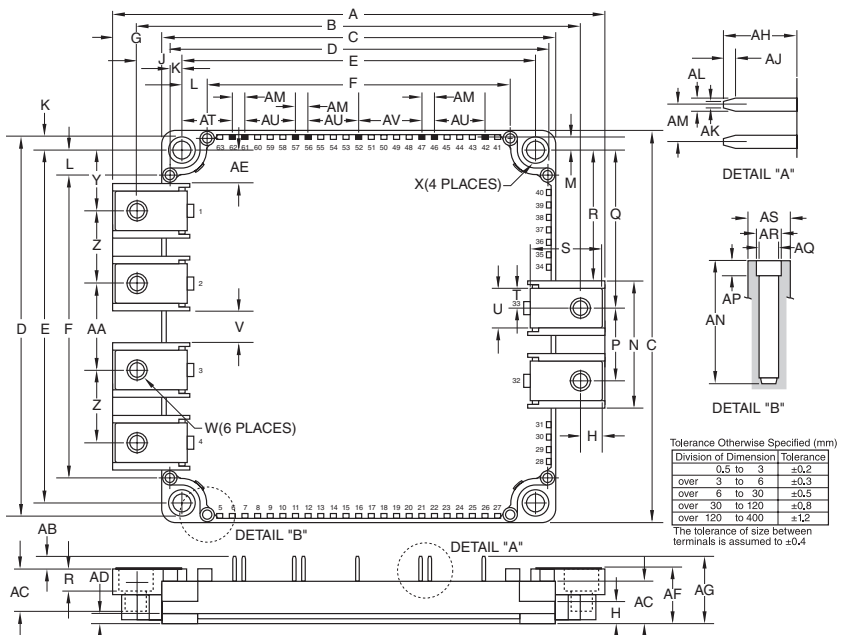

Dim.	Inches	Millimeters
A	12.2	310.0
B	5.6	142.5
C	4.96	126.0
D	1.89	48.0
E	1.85	46.9
F	0.28	7.0
G	2.28	58.0
H	0.21±0.004 Dia.	5.5±0.1 Dia.
J	M6 Metric	M6
K	1.65	42.0
L	0.91	23.0
M	M4 Metric	M4
N	0.35	9.0
P	0.47	11.9
Q	0.21	5.4

Dim.	Inches	Millimeters
R	0.33	8.5
S	4.92	125.0
T	0.6	15.0
U	0.83	21.0
V	1.5	38.0
W	2.04	51.9
X	1.85+0.04/-0.02	47.1+1.0/-0.5
Y	1.55	39.4
Z	0.63	16.0
AA	0.24	6.2
AB	0.16	4.0
AC	0.45	11.5
AD	2.01+0.04/-0.02	51.0+1.0/-0.5
AE	0.32	8.2
AF	0.55	14.0

Dim.	Inches	Millimeters
AG	2.05	52.0
AH	0.59	15.0
AJ	7.01	178.0
AK	3.98	101.0
AL	1.63	41.5
AM	1.54	39.0
AN	11.42	290.0
AP	9.13	232.0
AQ	6.85	174.0
AR	4.56	116.0
AS	0.39	10.0
AT	0.03	8.0
AU	0.02	5.0
AV	0.16	4.0
AW	1.425+0.04/-0.02	36.20+1.0/-0.5

Dim.	Inches	Millimeters
A	5.98	152.0
B	5.39	137.0
C	4.79	121.7
D	4.61	117.2
E	4.33±0.02	110.0±0.5
F	3.72	94.5
G	0.6	15.14
H	0.26	6.5
J	0.53	13.5
K	0.14	3.6
L	0.3	7.75
M	0.016	4.05
N	1.53	39.0
P	0.86	22.0
Q	1.95	49.72

Dim.	Inches	Millimeters
R	1.62	41.22
S	0.83	21.14
T	0.23	6.0
U	0.47	12.0
V	0.41	10.53
W	M6 Metric	M6
X	0.22	5.5 Dia.
Y	0.75	19.24
Z	0.86	22.0
AA	1.08	27.53
AB	0.14	3.5
AC	0.51	13.0
AD	0.19	3.0
AE	0.42	10.74
AF	0.67+0.04/-0.02	17.0+1.0/-0.5

Dim.	Inches	Millimeters
AG	0.81	20.5
AH	0.29	7.4
AJ	0.05	1.2
AK	0.02	0.65
AL	0.04	1.15
AM	0.15	3.81
AN	0.5	12.5
AP	0.12	3.0
AQ	0.088 Dia.	2.25 Dia.
AR	0.102 Dia.	2.6 Dia.
AS	0.16 Dia.	4.3 Dia.
AT	0.67	16.9
AU	0.6	15.24
AV	0.75	19.05

40 CM400HG-130H, CM600HG-90H

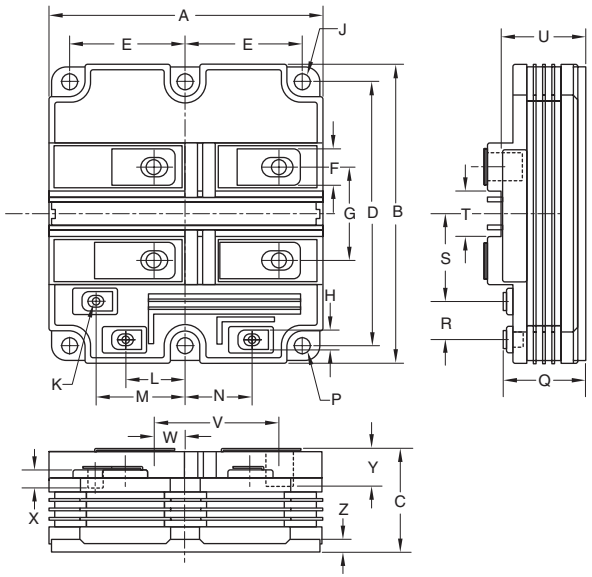

Dim.	Inches	Millimeters	Dim.	Inches	Millimeters
A	5.12±0.02	130.0±0.5	N	1.21±0.02	30.7±0.5
B	5.51±0.02	140.0±0.5	P	0.28 Dia.	7.0 Dia.
C	1.89+0.04/-0.0	48.0+1.0/-0.0	Q	1.5+0.04/-0.0	38.0+1.0/-0/0
D	4.88±0.01	124.0±0.25	R	0.71±0.012	18.0±0.3
E	2.24±0.01	57.0±0.25	S	1.61±0.02	41.0±0.5
F	0.67±0.004	17.0±0.1	T	0.87±0.012	22.0±0.3
G	1.73±0.012	44.0±0.3	U	1.59±0.02	40.4±0.5
H	0.35±0.04	9.0±0.1	V	2.41±0.02	61.2±0.5
J	M8 Metric	M8	W	0.65±0.012	16.5±0.3
K	M4 Metric	M4	X	0.30 Min.	7.7 Min.
L	1.12±0.02	28.5±0.5	Y	0.65 Min.	16.5 Min.
M	1.67±0.02	42.5±0.5	Z	0.2±0.006	5.0±0.15

41 CM800HC-66H, CM1000HC-66R

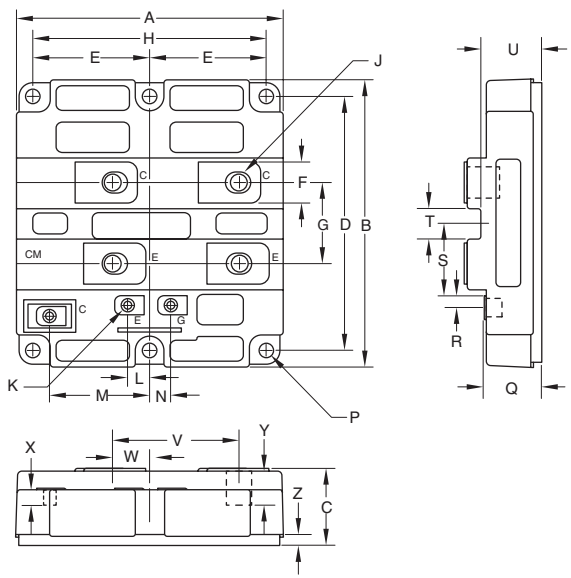

Dim.	Inches	Millimeters	Dim.	Inches	Millimeters
A	5.12±0.02	130.0±0.5	N	0.41±0.008	10.35±0.2
B	5.51±0.02	140.0±0.5	P	0.28 Dia.	7.0 Dia.
C	1.5+0.04/-0.0	38.0+1.0/-0.0	Q	1.10+0.04/-0.0	28.0+1.0/-0.0
D	4.88±0.004	124.0±0.1	R	0.20±0.008	5.2±0.2
E	2.24±0.004	57.0±0.1	S	1.57±0.012	40.0±0.3
F	0.79+0.04/-0.008	20.0+0.1/-0.2	T	0.59±0.008	15.0±0.2
G	1.57±0.008	40.0±0.2	U	1.16±0.02	29.5±0.5
H	4.49±0.004	114.0±0.1	V	2.42±0.012	61.5±0.3
J	M8 Metric	M8	W	0.71±0.008	18.0±0.2
K	M4 Metric	M4	X	0.30 Min.	7.7 Min.
L	0.42±0.008	10.65±0.2	Y	0.65 Min.	16.5 Min.
M	1.92±0.012	48.8±0.3	Z	0.20±0.006	5.0±0.15

42 CM150RXL-34SA

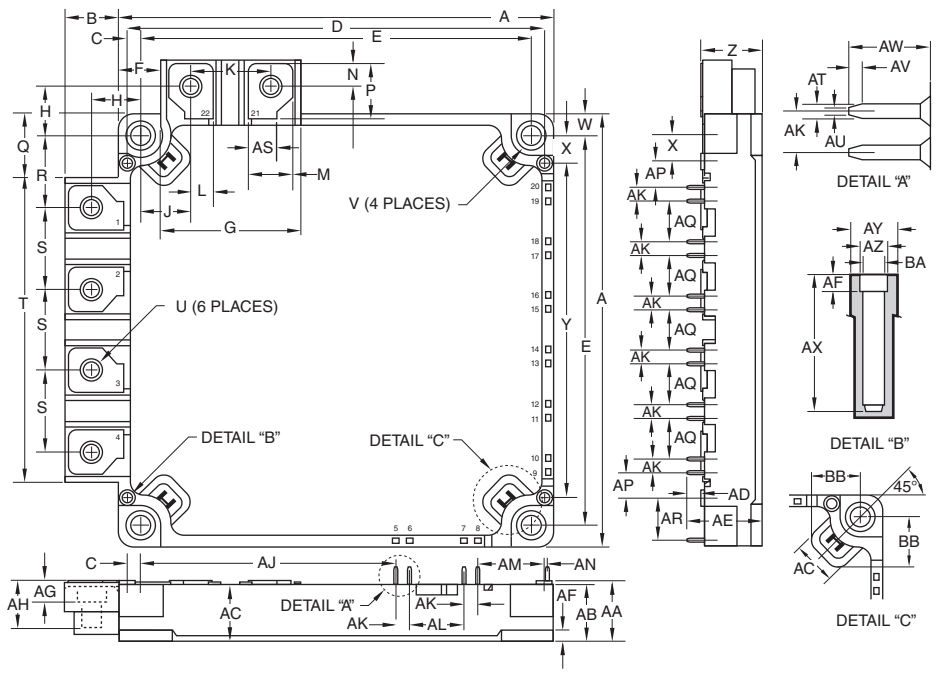

Dim.	Inches	Millimeters
A	4.79	121.7
B	0.59	15.1
C	0.14	3.6
D	4.61	117.2
E	4.33±0.02	110.0±0.5
F	0.45	11.5
G	1.53	39.0
H	0.53	13.5
J	0.55	14.14
K	0.87	22.0
L	0.24	6.0
M	0.47	12.0
N	0.37	6.5
P	0.61	15.64
Q	0.71	18.06
R	0.81	20.71
S	0.9	22.86

Dim.	Inches	Millimeters
T	3.37	85.58
U	M5 Metric	M5
V	0.22 Dia.	5.5 Dia.
W	0.23	5.86
X	0.30	7.75
Y	3.72	94.5
Z	0.67+0.04/-0.02	17.0 +1/-0.5
AA	0.67	17.0
AB	0.63	16.0
AC	0.51	13.0
AD	0.14	3.5
AE	0.81	20.5
AF	0.12	3.0
AG	0.23	5.9
AH	0.53	13.4
AJ	2.81	71.52
AK	0.15	3.81

Dim.	Inches	Millimeters
AL	0.60	15.24
AM	0.75	19.23
AN	0.017	0.45
AP	0.28	7.24
AQ	0.43	11.42
AR	0.43	11.08
AS	0.31	8.0
AT	0.04	1.15
AU	0.02	0.65
AV	0.05	1.2
AW	0.18	4.5
AX	0.49	12.5
AY	0.18 Dia.	4.5 Dia.
AZ	0.102 Dia.	2.6 Dia.
BA	0.088 Dia.	2.25 Dia.
BB	0.54	13.7

43 CM150EXS-24S, CM200EXS-24S, CM200EXS-34SA, CM300EXS-24S

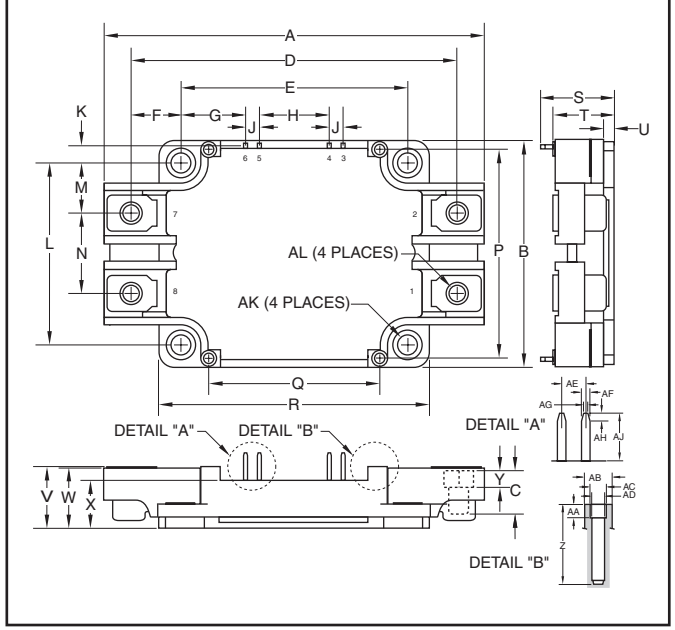

Dim.	Inches	Millimeters
A	4.09	104.0
B	2.44	62.0
C	0.47	11.9
D	3.5	89.0
E	2.44	62.0
F	0.53	13.5
G	0.69	17.66
H	0.75	19.05
J	0.14	3.8
K	0.16	4.2
L	1.97	50.0
M	0.55	14.0
N	0.87	22.0
P	2.26	57.5
Q	1.83	46.5
R	2.9	73.71
S	0.8	20.5
T	0.67	17.0

Dim.	Inches	Millimeters
U	0.27	7.0
V	0.67	17.0
W	0.64	16.4
X	0.51	13.1
Y	0.17	4.4
Z	0.49	12.5
AA	0.12	3.0
AB	0.17 Dia.	4.3 Dia.
AC	0.102 Dia.	2.6 Dia.
AD	0.088 Dia.	2.25 Dia.
AE	0.15	3.81
AF	0.045	1.15
AG	0.025	0.65
AH	0.05	1.2
AJ	0.29	7.4
AK	0.21 Dia.	5.5 Dia.
AL	M5 Metric	M5

44 CM150DX-34SA, CM200DX-34SA, CM300DX-34SA, CM450DX-34SA

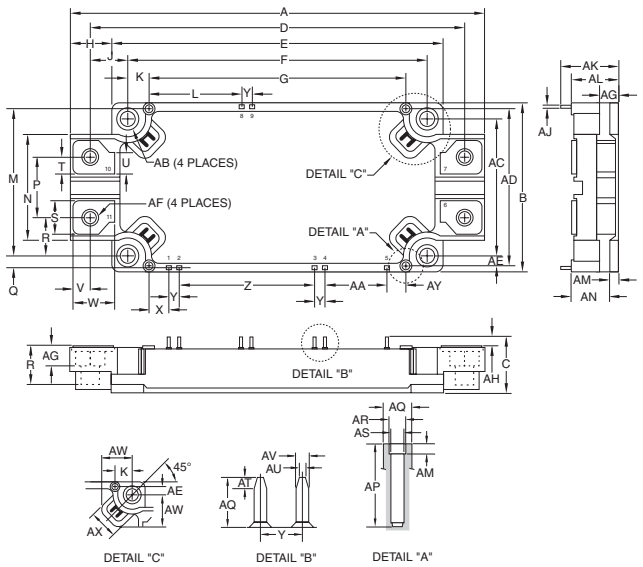

Dim.	Inches	Millimeters
A	5.98	152.0
B	2.44	62.0
C	0.67+0.04/-0.02	17.0+1.0/-0.5
D	5.39	137.0
E	4.79	121.7
F	4.33±0.02	110.0±0.5
G	3.72	94.5
H	0.60	15.14
J	0.53	13.5
K	0.31	7.75
L	1.33±0.012	33.91±0.3
M	2.13	54.2
N	1.54	39.0
P	0.87	22.0
Q	0.17	4.2
R	0.55	14.0
S	0.47	12.0
T	0.24	6.0
U	0.31	8.0
V	0.26	6.5
W	0.62	15.64
X	0.28±0.012	7.24±0.3
Y	0.15	3.81
Z	1.95	49.5

Dim.	Inches	Millimeters
AA	0.9	22.86
AB	0.22 Dia.	5.5 Dia.
AC	1.97±0.02	50.0±0.5
AD	2.26	57.5
AE	0.15	3.75
AF	M6	M6
AG	0.28	7.0
AH	0.14	3.5
AJ	0.03	0.8
AK	0.81	20.5
AL	0.70	17.0
AM	0.12	3.0
AN	0.65	16.5
AP	0.49	12.5
AQ	0.18	4.5
AR	0.102 Dia.	2.6 Dia.
AS	0.089 Dia.	2.25 Dia.
AT	0.05	1.2
AU	0.03	0.65
AV	0.05	1.15
AW	0.54	13.7
AX	0.52	13.0
AY	0.285	7.25

45 CM800HG-90R

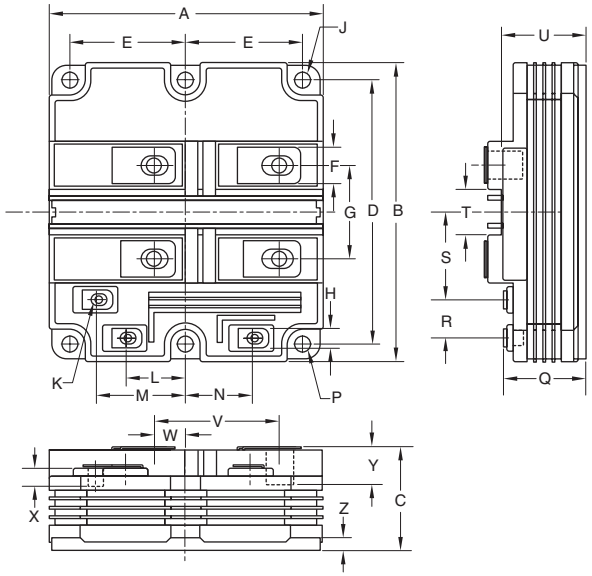

Dim.	Inches	Millimeters
A	5.12±0.02	130.0±0.5
B	5.51±0.02	140.0±0.5
C	1.89+0.04/-0.0	48.0+1.0/-0.0
D	4.88±0.01	124.0±0.25
E	2.24±0.01	57.0±0.25
F	0.67±0.004	17.0±0.1
G	1.73±0.012	44.0±0.3
H	0.35±0.04	9.0±0.1
J	M8 Metric	M8
K	M4 Metric	M4
L	1.12±0.02	28.5±0.5
M	1.67±0.02	42.5±0.5

Dim.	Inches	Millimeters
N	1.21±0.02	30.7±0.5
P	0.28 Dia.	7.0 Dia.
Q	1.5+0.04/-0.0	38.0+1.0/-0/0
R	0.71±0.012	18.0±0.3
S	1.61±0.02	41.0±0.5
T	0.87±0.012	22.0±0.3
U	1.59±0.02	40.4±0.5
V	2.41±0.02	61.2±0.5
W	0.65±0.012	16.5±0.3
X	0.30 Min.	7.7 Min.
Y	0.65 Min.	16.5 Min.
Z	0.2±0.006	5.0±0.15

46 QIS2510001, QIS4506001

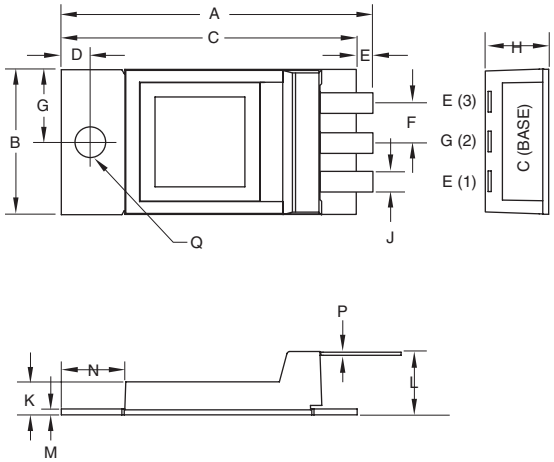

Dim.	Inches	Millimeters
A	2.31	53.6
B	0.98	25.0
C	2.01	51.0
D	0.2	5.0
E	0.1	2.5
F	0.27	6.9
G	0.49	12.5
H	0.46 Max.	11.8 Max.

Dim.	Inches	Millimeters
J	0.14	3.6
K	0.22	5.7
L	0.43	10.8
M	0.04	1.0
N	0.43	10.9
P	0.02	0.5
Q	0.21 Dia.	5.3 Dia.

47 QIS4506002, QIS6502002

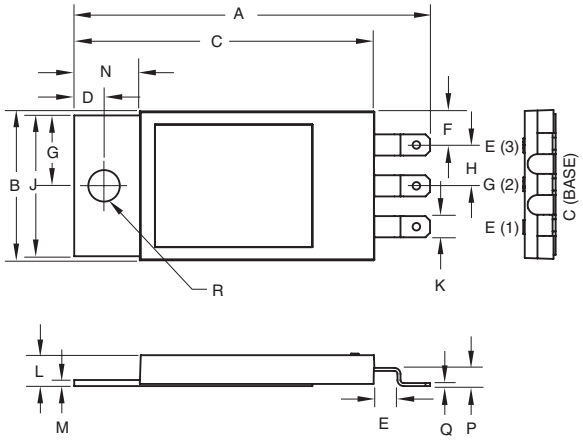

Dim.	Inches	Millimeters
A	2.35	59.7
B	0.98	25.0
C	1.98	50.3
D	0.197	5.0
E	0.22	5.5
F	0.22	5.6
G	0.465	11.8
H	0.27	6.9

Dim.	Inches	Millimeters
J	0.93	23.6
K	0.14	3.6
L	0.20	5.2
M	0.40	1.0
N	0.43	11.0
P	0.20	0.5
Q	0.12	3.0
R	0.208 Dia.	5.3 Dia.

48 QID0660023

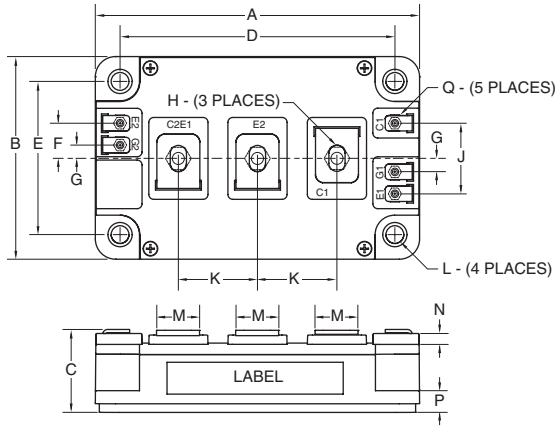

Dim.	Inches	Millimeters
A	4.00	101.6
B	2.50	63.5
C	1.00±0.015	25.4±0.4
D	3.39	86.1
E	1.89	48.0
F	0.435	11.0
G	0.165	4.2
H	#10-32 X 0.31 Min.	

Dim.	Inches	Millimeters
J	0.87	22.1
K	0.98	24.9
L	0.22 Dia.	5.6 Dia.
M	0.53	13.5
N	0.09 Min.	2.3 Min.
P	0.27	6.9
Q	#2-56 X 0.17 Min.	

49 QIQ0645001

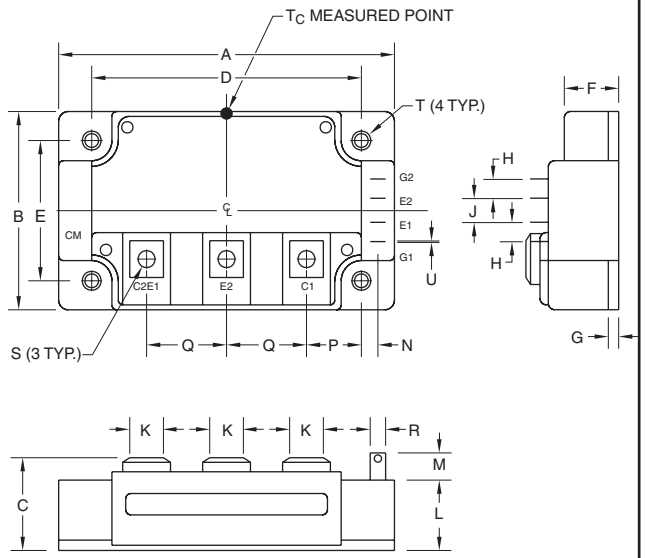

Dim.	Inches	Millimeters
A	4.25	108.0
B	2.44	62.0
C	1.14+0.04/-0.02	29.0+1.0/-0.5
D	3.66±0.01	93.0±0.25
E	1.88±0.01	48.0±0.25
F	0.67	17.0
G	0.16	4.0
H	0.24	6.0
J	0.59	15.0

Dim.	Inches	Millimeters
K	0.55	14.0
L	0.87	22.0
M	0.33	8.5
N	0.10	2.5
P	0.85	21.5
Q	0.98	25.0
R	0.11	2.8
S	M6 Metric	M6
T	0.25 Dia.	6.5 Dia.

50 CM225DX-24S1, CM300DX-24S1, CM450DX-24S1, CM600DX-24S1

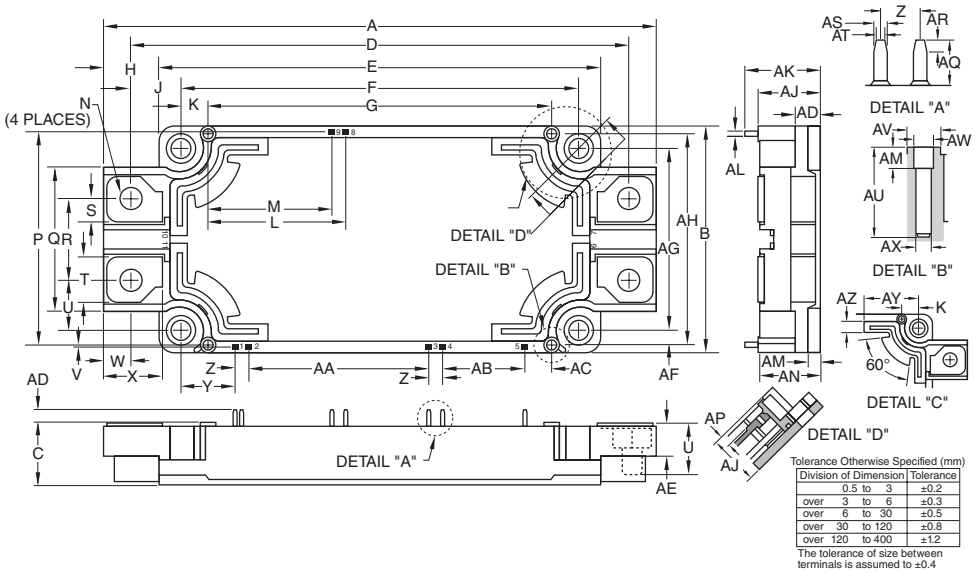

Dim.	Inches	Millimeters
A	5.98	152.0
B	2.44	62.0
C	0.67+0.04/-0.02	17.0+1/-0.5
D	5.39	137.0
E	4.79	121.7
F	4.33±0.02	110±0.5
G	3.72	94.5
H	0.60	15.14
J	0.53	13.5
K	0.30	7.75
L	1.48±0.019	37.72±0.3
M	1.33±0.019	33.91±0.3
N	M6 Metric	M6
P	2.28±0.019	57.95±0.3
Q	1.53	39.0
R	0.86	22.0

Dim.	Inches	Millimeters
S	0.23	6.0
T	0.47	12.0
U	0.55	14.0
V	0.04±0.019	0.95±0.3
W	2.56	65.0
X	0.61	15.64
Y	0.284±0.019	7.24±0.3
Z	0.15±0.019	3.81±0.3
AA	1.95±0.019	49.53±0.3
AB	0.9±0.019	22.86±0.3
AC	0.285±0.019	7.25±0.3
AD	0.14	3.5
AE	0.27	7.0
AF	0.15	3.75
AG	1.97±0.02	50.0±0.5
AH	2.26	57.5

Dim.	Inches	Millimeters
AJ	0.67	17.0
AK	0.81	20.5
AL	0.03	0.8
AM	0.12	3.0
AN	0.65	16.5
AP	0.13	3.4
AQ	0.17	4.5
AR	0.05	1.2
AS	0.05	1.15
AT	0.025	0.65
AU	0.49	12.5
AV	0.17 Dia.	4.5 Dia.
AW	0.102 Dia.	2.6 Dia.
AX	0.088 Dia.	2.25 Dia.
AY	0.95	24.2
AZ	0.19	5.0

51 QID3320004, QID4515004

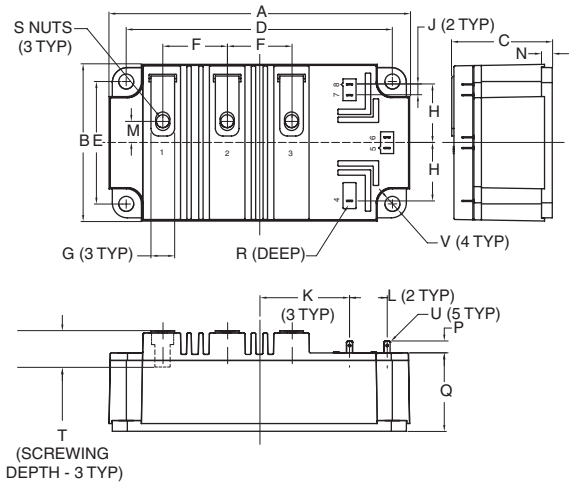

Dim.	Inches	Millimeters
A	5.51	140.0
B	2.87	73.0
C	1.50	38.0
D	4.88±0.01	124.0±0.25
E	2.24±0.01	57.0±0.25
F	1.18	30.0
G	0.43	11.0
H	1.07	27.15
J	0.20	5.0
K	1.65	42.0

Dim.	Inches	Millimeters
L	0.69±0.01	17.5±0.25
M	0.38	9.75
N	0.20	5.0
P	0.22	5.5
Q	1.04	26.5
R	0.16	4.0
S	M5 Metric	M5
T	0.63 Min.	16.0 Min.
U	0.11 x 0.02	2.8 x 0.5
V	0.28 Dia.	7.0 Dia.

52 CM100TX-24S1, CM150TX-24S1

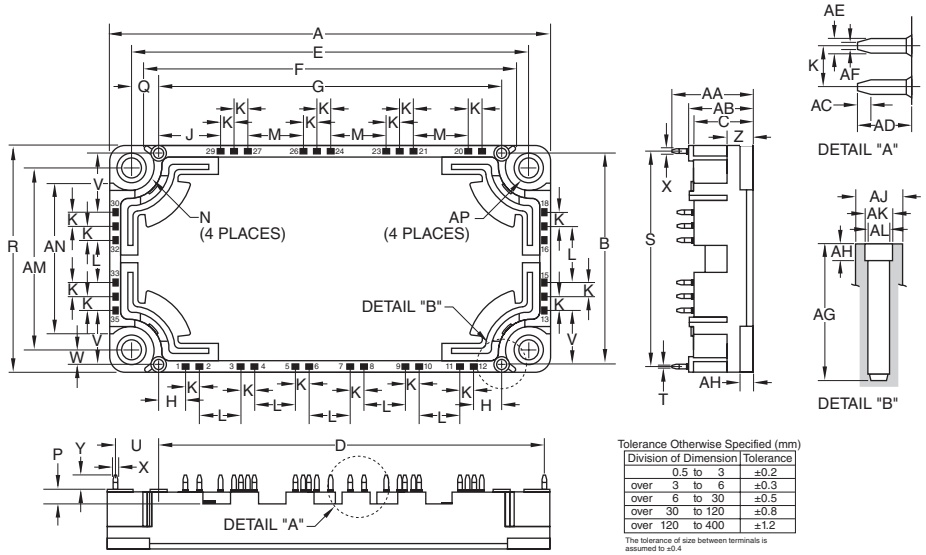

Dim.	Inches	Millimeters
A	4.79	121.7
B	2.26	57.5
C	0.63	16.0
D	4.18±0.008	106.31±0.2
E	4.33±0.02	110.0±0.5
F	4.027	102.3
G	3.72	94.5
H	0.28	7.24
J	0.66±0.019	16.77±0.3
K	0.15	3.81
L	0.45	11.42
M	0.6	15.24
N	0.26 Rad.	6.5 Rad.

Dim.	Inches	Millimeters
P	0.16	4.0
Q	0.29	7.75
R	2.44	62.0
S	2.28±0.008	57.95±0.2
T	0.17±0.008	0.45±0.2
U	0.46±0.008	11.8±0.2
V	0.60	15.41
W	0.15	3.75
X	0.03	0.8
Y	0.14	3.5
Z	0.27	7.0
AA	0.81	20.5
AB	0.67	17.0

Dim.	Inches	Millimeters
AC	0.05	1.2
AD	0.18	4.5
AE	0.05	1.15
AF	0.02	0.65
AG	0.49	12.5
AH	0.12	3.0
AJ	0.18 Dia.	4.5 Dia.
AK	0.102 Dia.	2.6 Dia.
AL	0.088 Dia.	2.25 Dia.
AM	1.97±0.0	50.0±0.5
AN	1.65	41.9
AP	0.22 Dia.	5.5 Dia.

53 CM100RX-24S1, CM150RX-24S1

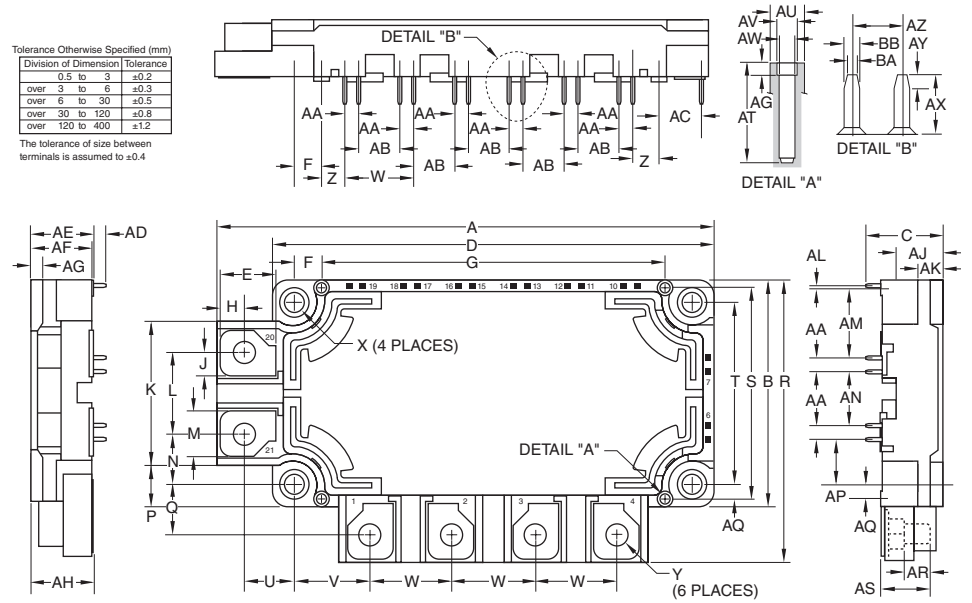

Dim.	Inches	Millimeters
A	5.39	136.9
B	2.44	62.0
C	0.81	20.5
D	4.79	121.7
E	0.61	15.64
F	0.30	7.75
G	3.72	94.5
H	0.26	6.5
J	0.24	6.0
K	1.53	39.0
L	.87	22.0
M	0.48	12.0
N	0.55	14.0
P	0.45	11.5
Q	0.54	13.64
R	3.03	77.1
S	2.26	57.5

Dim.	Inches	Millimeters
T	1.97±0.02	50.0±0.5
U	0.53	13.5
V	0.81	20.71
W	0.9	22.86
X	0.22 Dia.	5.5 Dia.
Y	M5 Metric	M5
Z	0.28	7.24
AA	0.15	3.82
AB	0.45	11.42
AC	0.46±0.008	11.8±0.2
AD	0.14	3.5
AE	0.67	17.0
AF	0.65	16.5
AG	0.12	3.0
AH	0.67+0.04/-0.0	17.0+1.0/-0.5
AJ	0.53	13.6
AK	0.27	7.0

Dim.	Inches	Millimeters
AL	0.02	0.55
AM	0.75	19.12
AN	0.6	15.24
AP	0.46	11.67
AQ	0.15	3.75
AR	0.23	5.9
AS	0.53	13.4
AT	0.49	12.5
AU	0.18 Dia.	4.5 Dia.
AV	0.102 Dia.	2.6 Dia,
AW	0.088 Dia.	2.25 Dia.
AX	0.18	4.5
AY	0.05	1.2
AZ	0.15	3.81
BA	0.02	0.65
BB	0.05	1.15

56 QIS176002, QIS1790001

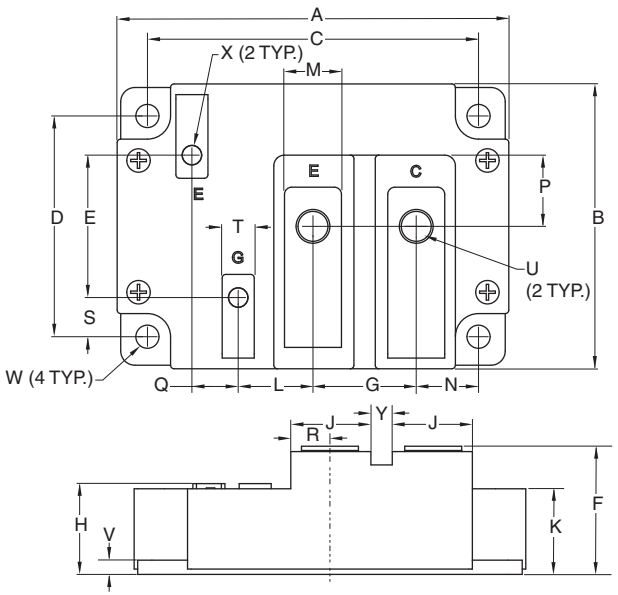

Dim.	Inches	Millimeters
A	4.33	110.0
B	3.15	80.0
C	3.66±0.008	93.0±0.25
D	2.44±0.008	62.0±0.25
E	1.57	40.0
F	1.42 Max.	36.0 Max.
G	1.14	29.0
H	1.00 Max.	25.5 Max.
J	0.89	22.5
K	0.93	23.5
L	0.83	21.0
M	0.63	16.0

Dim.	Inches	Millimeters
N	0.69	17.5
P	0.79	20.0
Q	0.51	13.0
R	0.43	11.0
S	0.43	11.0
T	0.35	9.0
U	M8 Metric	M8
V	0.16	4.0
W	0.256 Dia.	6.5 Dia.
X	M4 Metric	M4
Y	0.24	6.0

57 QID3340001, QID3350001

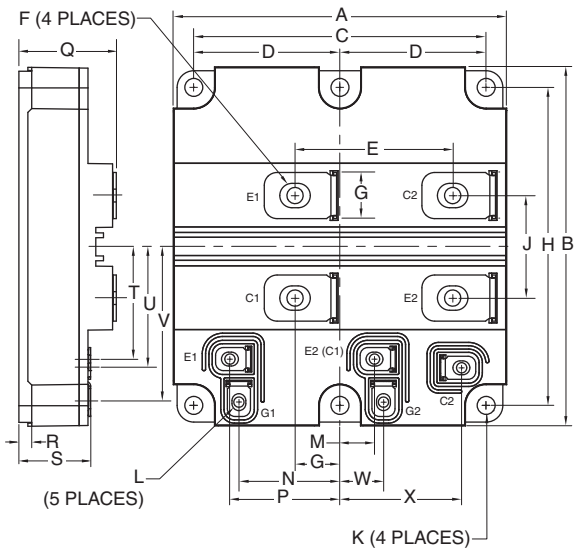

Dim.	Inches	Millimeters
A	5.11	130.0
B	5.51	140.0
C	4.49	114.0
D	2.24	57.0
E	2.42	61.5
F	M8	M8 Metric
G	0.71	18.0
H	4.88	124.0
J	1.57	40.0
K	0.27	7.0 Dia.
L	M4	M4 Metric

Dim.	Inches	Millimeters
M	0.51	13.0
N	1.57	39.9
P	1.71	43.4
Q	1.49	38.0
R	0.20	5.0
S	1.10	28.0
T	1.72	43.8
U	1.86	47.2
V	2.39	60.6
W	0.65	16.5
X	1.85	47.0

HYBRID & SiC MODULES

Hybrid Si / SiC IGBT Modules

Combining the industry's fastest power IGBT of the Powerex NFH-Series with a Zero Recovery® Schottky diode, Powerex hybrid split dual Si / SiC IGBT modules are designed for use in high frequency applications; upwards of 30kHz for hard switching applications and 60 to 80 kHz for soft switching applications.

Applications Include:

- Energy Saving Power Systems (fans, pumps and consumer appliances)
- High Frequency Type Power Systems (UPS, high speed motor drives, induction heating, welder and robotics)
- High Temperature Power Systems(power electronics in electric vehicle and aviation systems)

SiC MOSFET Modules

Powerex also offers SiC (silicon carbide) MOSFET (Metal Oxide Semiconductor Field Effect Transistor) modules.

SiC Schottky Diode Modules

Powerex also offers SiC (silicon carbide) Schottky diode modules.

Applications:

- High Efficiency Inverters
- High Frequency Power Supplies
- High Temperature Environment

Circuit Configurations:

- Single
- Dual
- In-Parallel
- Common Collector (Drain)
- Common Emitter (Source)

TABLE OF CONTENTS

Split Dual Si / SiC Hybrid IGBT Modules B-2
Split Dual SiC Super Fast Diode Modules .. B-3
SiC & Si MOSFET Modules B-4
Outline Drawings B-5

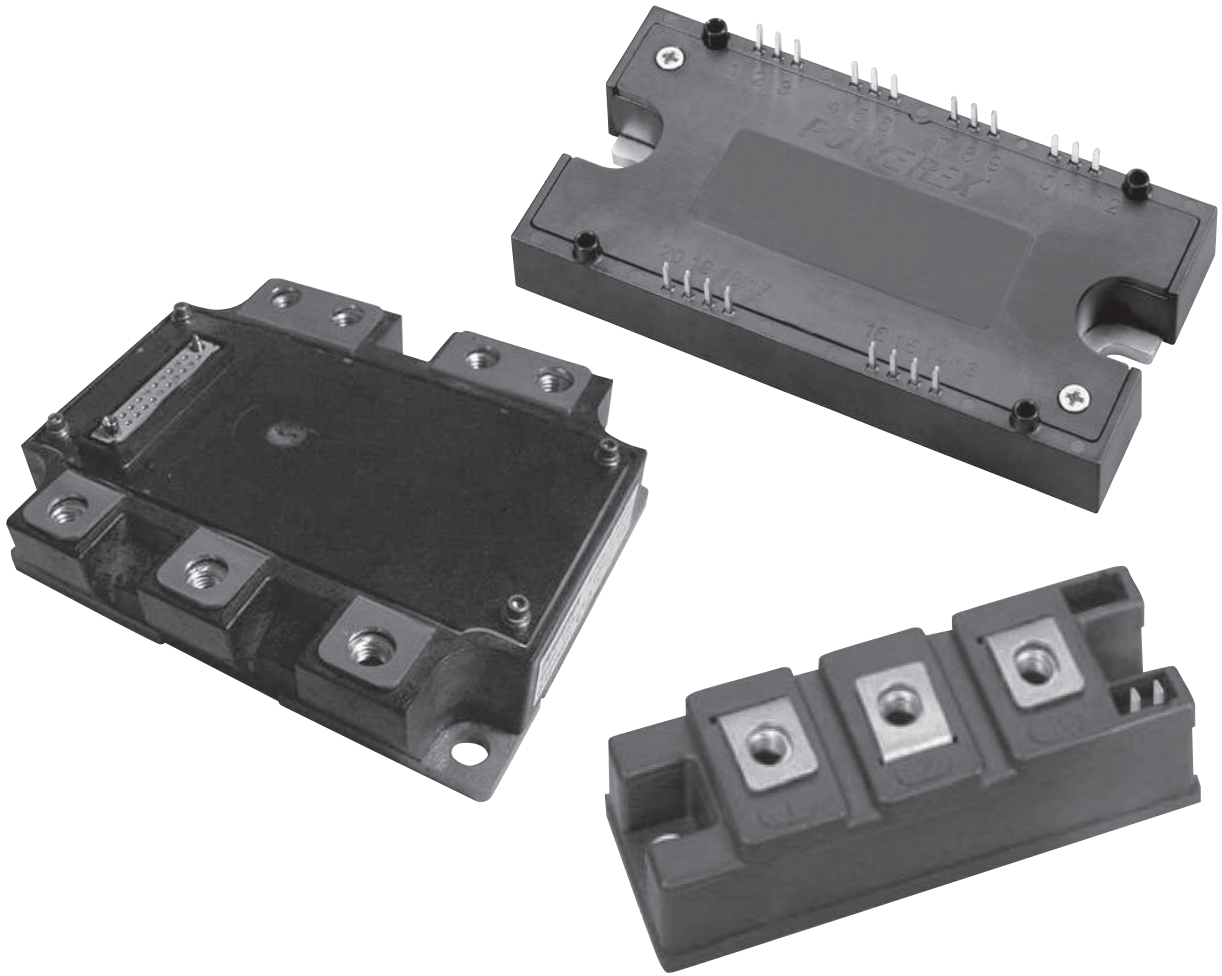

VOLTAGE: 100V TO 1200V
CURRENT: 100A TO 300A

Zero Recovery® is a registered trademark of Cree, Inc.

Split Dual Si / SiC Hybrid IGBT Modules,

(Refer to device datasheets at www.pwrx.com for test conditions.)

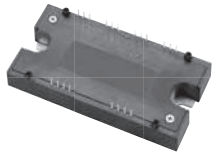

QID1210005, QID1210007,
QID1210006, QID1215003

MAXIMUM RATINGS						ELECTRICAL CHARACTERISTICS										
						Static Test Conditions		T_j = 25°C		Dynamic						
								Typ.	Max.	V_{GE} = 0V, V_{CE} = 10V, f = 1KHz			Resistive Load Switching Times			
Type	V_{CES} Volts	I_C Amperes	I_{CM} Amperes	$T_{j(MAX)}$ °C	V_{RMS} Isolation Volts	I_C Amperes	V_{GE} Volts	$V_{CES\ (SAT)}$ Volts	$V_{CES\ (SAT)}$ Volts	C_{ies} nF	C_{oes} nF	C_{res} nF	$t_{d(on)}$ ns	t_r ns	$t_{d(off)}$ ns	t_r ns
QID1210005	1200	100	200	150	2500	100	15	5.0	6.5	16	1.3	0.3	TBD	TBD	TBD	TBD
QID1210006	1200	100	200	150	2500	100	15	5.0	6.5	16	1.3	0.3	TBD	TBD	TBD	TBD
QID1210007	1200	100	200	150	2500	100	15	5.0	6.5	16	1.3	0.3	TBD	TBD	TBD	TBD
QID1215003	1200	100	300	150	2500	150	15	5.0	6.5	24	2.0	0.45	TBD	TBD	TBD	TBD

	FREE WHEEL DIODE			THERMAL CHARACTERISTICS					
Type	I_{FM} Amperes	V_{FM} Volts	t_{rr} ns	IGBT (Max.) $R_{th(j-c)}$ °C/W	Diode (Max.) $R_{th(j-c)}$ °C/W	Interface Per Module (Typ.) $R_{th(c-f)}$ °C/W	Weight Grams	Outline Drawings Number	Page
QID1210005	80	2.0	—	0.17	0.304	0.04	270	1	B-5
QID1210006	80	2.0	—	0.21	0.39	0.04	130	1	B-5
QID1210007	75	1.75	—	0.17	0.5	0.04	270	1	B-5
QID1215003	150	1.75	—	0.13	0.25	0.04	270	1	B-5

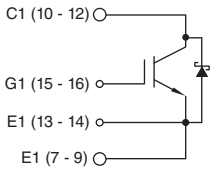

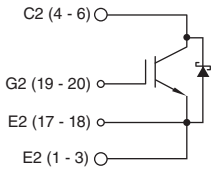

Numbering System

QID1210005 is a 1200V, 100A Split Dual Si / SiC Hybrid IGBT Module

Q	I	D	12	10	0	0	5
(1)	(2)	(3)	(4,5)	(6,7)	(8)	(9)	(10)

Serial Designation (SPECIAL)

(1) Product Line

(2) Device:
I = IGBT

(3) Configuration:
D = Double / Dual

(4,5) Voltage:
12 = 1200

(6,7) Current:
10 = 100

Serial Designation

SPECIAL:
(8) 0 – 9 (Numbered from 001 – 999 for
(9) 0 – 9 each individual combination of
(10) 0 – 9 7 previous digits.)

Split Dual SiC Super Fast Diode Modules,

(Refer to device datasheets at www.pwrx.com for test conditions.)

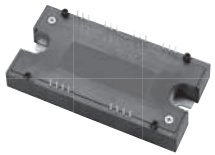

QRD1210004,
QRD1210005

MAXIMUM RATINGS							ELECTRICAL AND THERMAL CHARACTERISTICS					
Type	V_{RRM} Volts	$I_{F(DC)}$ Amperes	I_{FSM} Amperes	$T_{j(MAX)}$ °C	V_{RMS} Isolation Volts	i^2t A^2 sec (8.3ms, $T_{j(max)}$, 100% V_{RRM} Reapplied)	V_{FM}/I_F Volts/Amperes (T_j = 175°C)	$R_{th(j-c)}$ °C/W	$R_{th(c-s)}$ °C/W	Weight Grams	Outline Drawings Number	Page
QRD1210004	1200	100	TBD	175	2500	TBD	3.0 / 100	0.26	0.04	270	3	B-5
QRD1210005	1200	100	TBD	175	2500	TBD	3.0 / 100	0.26	0.04	140	3	B-5

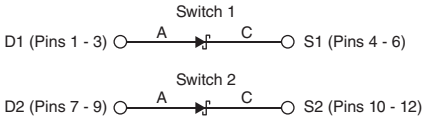

Numbering System

QRD1210005 is a 1200V, 100A Split Dual SiC Super Fast Diode Module

Q	R	D	12	10	0	0	5
(1)	(2)	(3)	(4,5)	(6,7)	(8)	(9)	(10)

Serial Designation (SPECIAL)

(1) Product Line

(2) Device:
R = Rectifier

(3) Configuration:
D = Double / Dual

(4,5) Voltage:
12 = 1200

(6,7) Current:
10 = 100

Serial Designation

SPECIAL:
(8) 0 – 9 (Numbered from 001 – 999 for
(9) 0 – 9 each individual combination of
(10) 0 – 9 7 previous digits.)

SiC and Si MOSFET Modules, (Refer to device datasheets at www.pwrx.com for test conditions.)

QJS0512001

QJD1210010,
QJD1210011,
QJD1210SA1,
QJD1210SA2

QJE0130018,
QJE0130021

MAXIMUM RATINGS					ELECTRICAL CHARACTERISTICS					THERMAL CHARACTERISTICS				
					Static									
Type	V_{DS} Volts	I_D Amperes $T_j = 25°C$ (Typ.)	$T_{j(MAX)}$ °C	V_{RMS} Isolation Volts	$R_{DS(on)}$ (mΩ) (Typ.)	V_{DSS} Volts (Min.)	I_{DSS} (μA) (Max.)	V_{SD} Volts (Max.)	Q_C (nC) (Typ.)	MOSFET (Typ.) $R_{th(j-c)}$ °C/W	Module (Max.) $R_{th(c-f)}$ °C/W	Weight Grams	Outline Drawings Number	Page
Single Si MOSFET Module														
QJS0512001	500	120	150	2500	22	500	20	1.5	380	0.1	0.075	220	4	B-6

MAXIMUM RATINGS						ELECTRICAL CHARACTERISTICS					THERMAL CHARACTERISTICS					
								V_{GS} = 0V			Interface Per Module (Typ.)	MOSFET (Max.)	Diode (Max.)			
Type	V_{DSS} Volts	I_D Amperes	$I_D(1)$ Amperes	P_d Watts	V_{RMS} Isolation Volts	$R_{DS(on)}$ mΩ	V_{SD} Volts	C_{iss} nF	C_{rss} nF	Q_G nC	$R_{th(c-s)}$ °C/W	$R_{th(j-c)}$ °C/W	$R_{th(j-c)}$ °C/W	Weight Grams	Outline Drawings Number	Page
Split Dual SiC 1200V Modules																
QJD1210010	1200	100*	250	1080	3000	15	4.0	10.2	0.1	550	0.04	0.138	0.243	270	2	B-5
QJD1210011	1200	100*	250	900	3000	15	4.0	10.2	0.1	550	0.04	0.167	0.294	140	2	B-5
QJD1210SA1	1200	100*	200	520	3000	18	1.45	8.2	0.1	300	0.04	0.24	0.39	270	2	B-5
QJD1210SA2	1200	100*	200	415	3000	17	1.45	8.2	0.1	300	0.04	0.29	0.47	140	2	B-5
6-Pack SiC High Power Modules																
QJE0130018	100	300	—	960	2500	1.8	1.3	110	15	1800	0.1	0.13	—	430	5	B-6
QJE0130021	100	300	—	960	2500	1.8	1.3	110	15	1800	—	0.13	—	430	5	B-6

* Current rating when wired as a Dual

Single MOSFET Module

QJS0512001

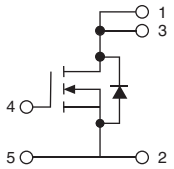

Split Dual MOSFET Module

QJD1210010, QJD1210011, QJD1210SA1, QJD1210SA2

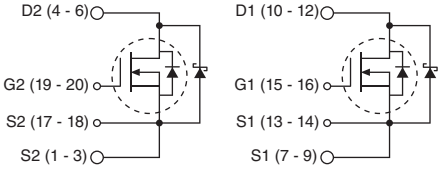

6-Pack MOSFET Module

QJE0130018, QJE0130021

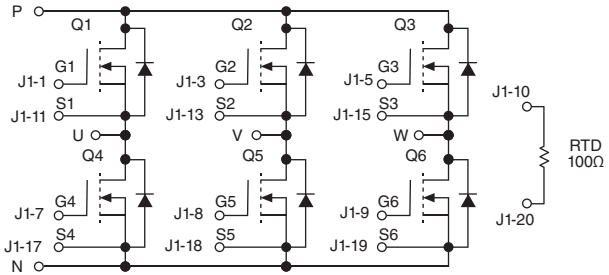

Numbering System

QJD1210010 is a 1200V, 100A, Split Dual SiC MOSFET Module

Q	J	D	12	10	0	1	0
(1)	(2)	(3)	(4,5)	(6,7)	(8)	(9)	(10)

Serial Designation (SPECIAL)

(1) Product Line

(2) Device:
J = MOSFET

(3) Configuration:
D = Split Dual
E = 6-Pack
S = Single

(4,5) Voltage:
01 = 100V
05 = 500V
12 = 1200V

(6,7) Current:
10 = 100
12 = 120
30 = 300

Serial Designation

SPECIAL:
(8) 0 – 9 (Numbered from 001 – 999 for
(9) 0 – 9 each individual combination of
(10) 0 – 9 7 previous digits.)

1 QID1210005, QID1210006, QID1210007, QID1215003

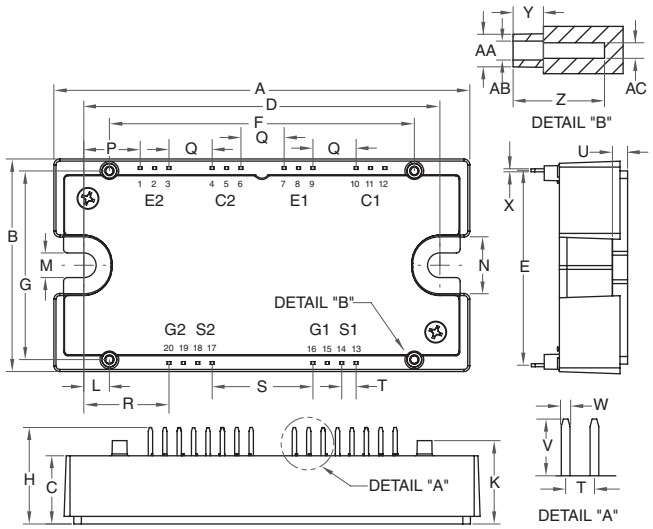

Dim.	Inches	Millimeters	Dim.	Inches	Millimeters
A	4.32	109.8	Q	0.449	11.40
B	2.21	56.1	R	0.885	22.49
C	0.71	18.0	S	1.047	26.6
D	3.70±0.02	94.0±0.5	T	0.15	3.80
E	2.026	51.46	U	0.16	4.0
F	3.17	80.5	V	0.30	7.5
G	1.96	49.8	W	0.045	1.15
H	1.00	25.5	X	0.03	0.8
K	0.87	22.0	Y	0.16	4.0
L	0.266	6.75	Z	0.47	12.1
M	0.26	6.5	AA	0.17 Dia.	4.3 Dia.
N	0.59	15.0	AB	0.10 Dia.	2.5 Dia.
P	0.586	14.89	AC	0.08 Dia.	2.1 Dia.

2 QJD1210010, QJD1210011, QJD1210SA1, QJD1210SA2

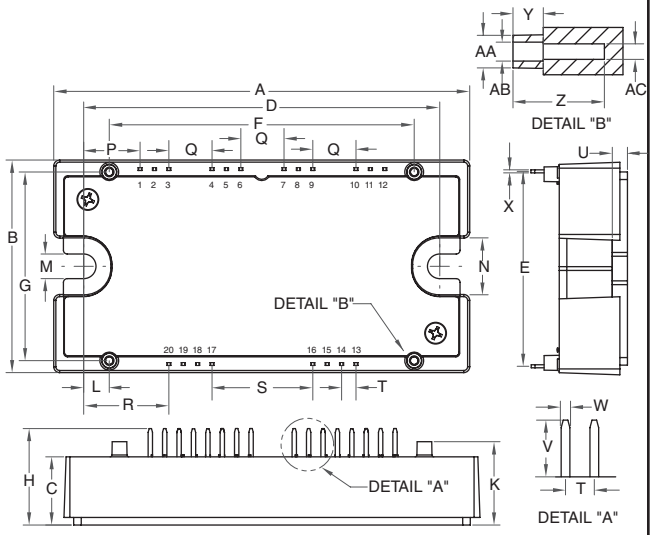

Dim.	Inches	Millimeters	Dim.	Inches	Millimeters
A	4.32	109.8	Q	0.449	11.40
B	2.21	56.1	R	0.885	22.49
C	0.71	18.0	S	1.047	26.6
D	3.70±0.02	94.0±0.5	T	0.15	3.80
E	2.026	51.46	U	0.16	4.0
F	3.17	80.5	V	0.30	7.5
G	1.96	49.8	W	0.045	1.15
H	1.00	25.5	X	0.03	0.8
K	0.87	22.0	Y	0.16	4.0
L	0.266	6.75	Z	0.47	12.1
M	0.26	6.5	AA	0.17 Dia.	4.3 Dia.
N	0.59	15.0	AB	0.10 Dia.	2.5 Dia.
P	0.586	14.89	AC	0.08 Dia.	2.1 Dia.

3 QRD1210004, QRD1210005

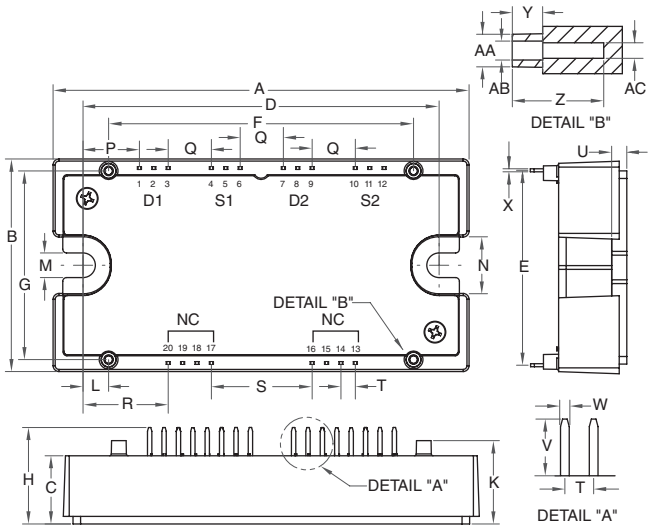

Dim.	Inches	Millimeters	Dim.	Inches	Millimeters
A	4.32	109.8	Q	0.449	11.40
B	2.21	56.1	R	0.885	22.49
C	0.71	18.0	S	1.047	26.6
D	3.70±0.02	94.0±0.5	T	0.15	3.80
E	2.026	51.46	U	0.16	4.0
F	3.17	80.5	V	0.30	7.5
G	1.96	49.8	W	0.045	1.15
H	1.00	25.5	X	0.03	0.8
K	0.87	22.0	Y	0.16	4.0
L	0.266	6.75	Z	0.47	12.1
M	0.26	6.5	AA	0.17 Dia.	4.3 Dia.
N	0.59	15.0	AB	0.10 Dia.	2.5 Dia.
P	0.586	14.89	AC	0.08 Dia.	2.1 Dia.

4 QJS0512001

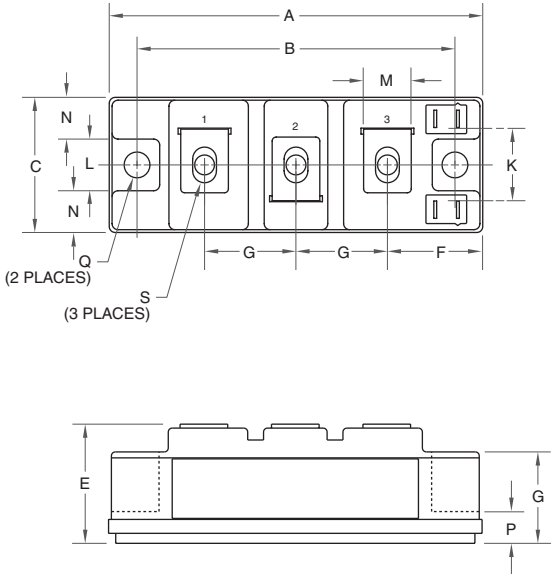

Dim.	Inches	Millimeters
A	3.70	94.0
B	1.34	34.0
C	1.18	30.0
D	3.15	80.0
E	0.50	12.7
F	0.28	7.0
G	0.67	17.0
H	0.91	23.0
J	0.91	23.0

Dim.	Inches	Millimeters
K	M6 Metric	M6
L	0.31	8.0
M	0.256 Dia.	6.5 Dia.
N	0.47	12.0
P	1.13	28.7
Q	0.10	2.5
R	0.84	21.3
S	0.21	5.3
T	0.24	6.1

5 QJE0130018, QJE0130021

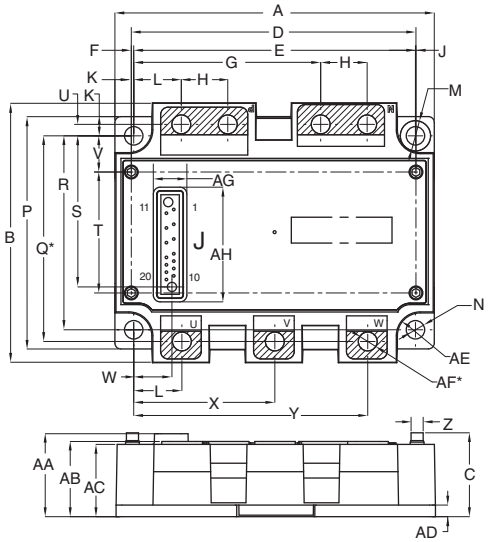

Dim.	Inches	Millimeters
A	4.33	109.98
B	3.54	89.91
C	1.17 Max.	29.72 Max.
D	3.86	98.04
E	3.82	97.03
F	0.03	0.76
G	2.54	64.52
H	0.63	16.0
J	0.01	0.254
K	0.26	6.604
L	0.65	16.51
M	0.41 Dia.	10.414 Dia.
N	0.25 Dia.	6.35
P	3.15	80.01
Q	2.80	71.12
R	2.63	66.802

Dim.	Inches	Millimeters
S	2.06	51.816
T	1.64	41.656
U	0.16	4.0
V	0.49	12.446
W	0.52	13.208
X	1.91	48.514
Y	3.17	80.518
Z	0.14 Dia.	3.556 Dia.
AA	1.12	28.448
AB	1.04 ±0.25	26.416 ±6.35
AC	0.98	24.892
AD	0.157 ±0.006	3.9878 ±0.152
AE	0.36 Rad.	9.144 Rad.
AF	0.30 Dia.	7.62
AG	0.46	11.684
AH	1.58	40.132

All dimensions are ±0.02 inches unless otherwise specified.

MOSFET Modules

Applications Include:
- Chopper
- Forklifts
- Off-Road Electric Vehicles
- Power Supplies

Circuit Configurations:
- 6-Pac
- Chopper (By Paralleling Legs)
- Dual (By Paralleling Legs)

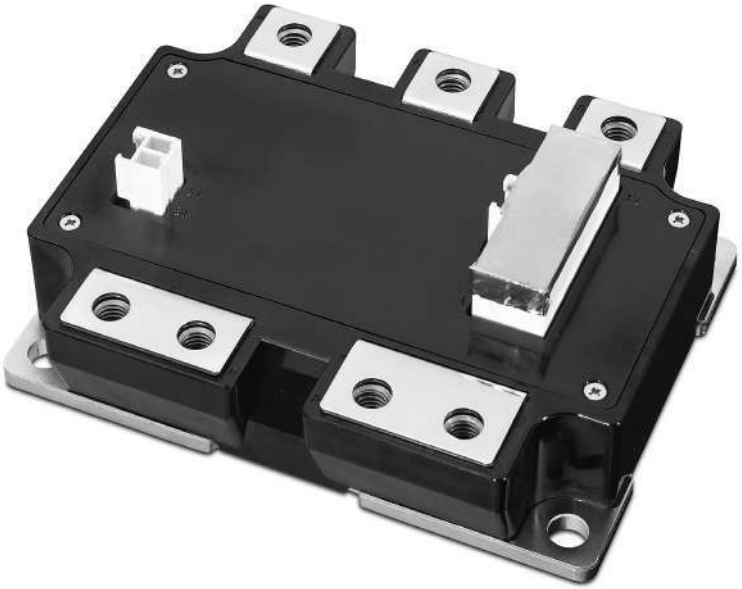

VOLTAGE: 75V TO 150V
CURRENT: 200A TO 600A

TABLE OF CONTENTS

Numbering System C-2
MOSFET Modules C-2
Outline Drawings C-3

MOSFET Modules, (Refer to device datasheets at www.pwrx.com for test conditions.)

MAXIMUM RATINGS						ELECTRICAL CHARACTERISTICS							THERMAL CHARACTERISTICS			
								V_{DS} = 10V, V_{GS} = 0V								
Type	V_{DSS} Volts	I_D Amperes	I_D(1) Amperes	P_d Watts	V_{RMS} Isolation Volts	$R_{DS(on)}$ mΩ	V_{SD} Volts	C_{iss} nF	C_{rss} nF	Q_G nC	Q_{rr} µC	t_{rr} ns	Interface Per Module $R_{th(j-c)}$ °C/W	Weight Grams	Outline Drawings Number	Page
75V Modules																
FM200TU-07A	75	200	600	560	2500	1.2	1.3	50	4.0	700	2.0	200	0.22	600	1	C-3
FM400TU-07A	75	400	1200	650	2500	0.8	1.3	75	6.0	1100	4.5	200	0.142	600	1	C-3
FM600TU-07A	75	600	1800	1300	2500	0.53	1.3	110	10.0	1650	4.8	200	0.096	600	1	C-3
100V Modules																
FM200TU-2A	100	200	600	560	2500	2.4	1.3	50	4.0	760	3.6	250	0.22	600	1	C-3
FM400TU-2A	100	400	1200	880	2500	1.45	1.3	75	6.0	1200	6.0	250	0.142	600	1	C-3
FM600TU-2A	100	600	1800	1300	2500	0.8	1.3	110	10.0	1800	6.2	250	0.096	600	1	C-3
150V Modules																
FM200TU-3A	150	200	600	560	2500	4.8	1.3	50	4.0	820	6.5	200	0.22	600	1	C-3
FM400TU-3A	150	400	1200	880	2500	2.6	1.3	75	6.0	1300	7.0	200	0.142	600	1	C-3
FM600TU-3A	150	600	1800	1300	2500	1.6	1.3	110	10.0	1950	8.0	200	0.096	600	1	C-3

(1) Current rating when wired as a Dual or Chopper

6-Pac MOSFET Modules OR **Dual MOSFET Module (By Paralleling)** OR **Chopper MOSFET Module (By Paralleling)**

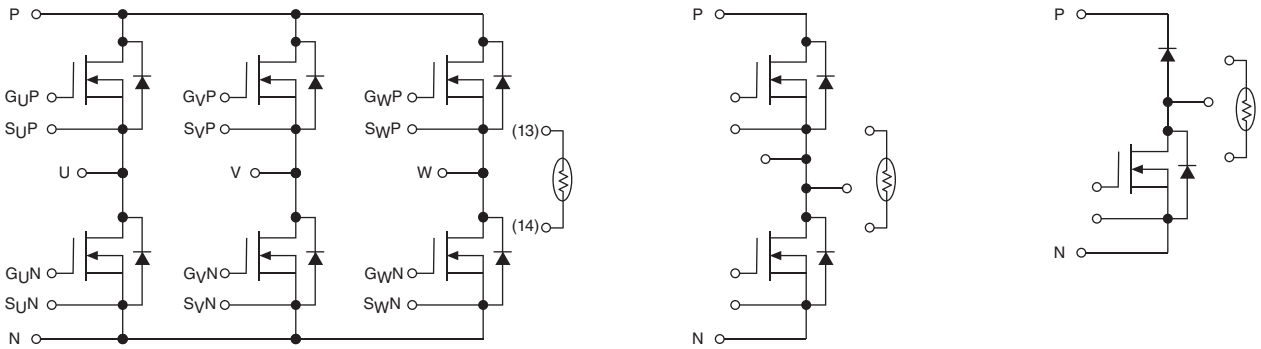

Numbering System

FM400TU-2A is a 400 Ampere, 100 Volt, 6-Pac MOSFET Module

FM 400 TU – 2A

(1) (2) (3) (4)

(1) FM = MOSFET

(2) Current Rating: I_D (Amperes)

(3) TU = 6-Pac

(4) Drain Source Voltage, V_{DSS}:
07A = 75V
2A = 100V
3A = 150V

1 FM200TU-07A, FM200TU-2A, FM200TU-3A, FM400TU-07A, FM400TU-2A, FM400TU-3A, FM600TU-07A, FM600TU-2A, FM600TU-3A

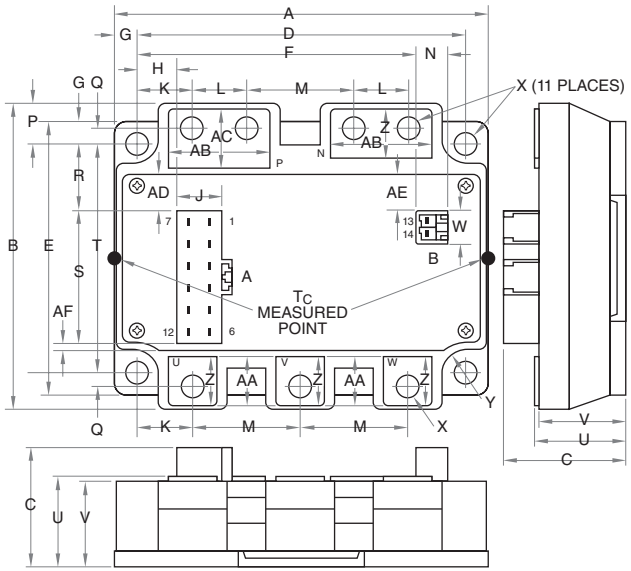

Dim.	Inches	Millimeters
A	4.33	110.0
B	3.54	90.0
C	1.38	35.0
D	3.82	97.0
E	3.15	80.0
F	3.27	83.0
G	0.26	6.5
H	0.48	12.0
J	0.51	12.9
K	0.65	16.5
L	0.63	16.0
M	1.26	32.0
N	0.35	8.8
P	0.45	11.5
Q	0.16	4.0

Dim.	Inches	Millimeters
R	0.79	20.0
S	1.50	38.0
T	2.64	67.0
U	1.02	26.0
V	0.98	25.0
W	0.36	9.1
X	Dia. 0.25	Dia. 6.5
Y	Rad. 0.25	Rad. 6.5
Z	0.57	14.5
AA	0.55	14.0
AB	1.18	30.0
AC	0.69	17.5
AD	0.47	12.0
AE	0.61	15.5
AF	0.18	4.5

Housing Types (Tyco Amp)

A 917354-1
B 177898-1

IPMs

Applications Include:
- Hybrid Electric Vehicles (HEV / EV)
- Motor Drives
- Photovoltaic (PV) Inverters
- Power Supplies
- Servo Drives
- UPS

Circuit Configurations:
- Dual
- H-Bridge [+ Chopper(s)]
- 6-Pac
- 7-Pac

Features:
- Integrated Gate Drive
- Gate Drive Undervoltage (UV) Lockout
- Over Temperature Protection
- Short Circuit (SC) Protection Using On-Chip Current Sensor

Development Kits available for some types.
(See Section N, DC-DC Converters)

TABLE OF CONTENTS

Numbering System D-2
L1-Series Photovoltaics (600V) D-2
L1-Series & L-Series 6-Pac & 7-Pac
600V D-3
1200V D-4
V1-Series Duals D-5
Outline Drawings D-6

VOLTAGE: 600V TO 1200V
CURRENT: 25A TO 800A

Photovoltaic 600V L1-Series Intelligent Power Modules,

(Refer to device datasheets at www.pwrx.com for test conditions.)

MAXIMUM RATINGS (IGBT Inverter Sector)					ELECTRICAL CHARACTERISTICS (IGBT Inverter Sector)										PROTECTION TRIP LEVELS			THERMAL CHARACTERISTICS					
									Brake	Inductive Load Switching Times									IGBT	DIODES		Outline Drawings	
Type	V_{CES} Volts	I_C Amperes	P_d Watts	V_{RMS} Isolation Volts	Typ. $V_{CE(SAT)}$ Volts	V_{EC} Volts	I_{CES} mA	$V_{CC(PROT)}$ Volts	I_C Amperes	$t_{(on)}$ µsec	t_{rr} µsec	$t_{c(on)}$ µsec	$t_{(off)}$ µsec	$t_{c(off)}$ µsec	SC Amperes	OT °C	UV Volts	$R_{th(c-f)}$ °C/W	$R_{th(j-c)}$ °C/W	$R_{th(j-c)}$ °C/W	Weight Grams	Number	Page
PM50B4L1C060	600	50	168	2500	1.9	1.7	1.0	400	–	0.8	0.4	0.4	1.0	0.3	75	135	12	0.06	0.74	1.28	135	3	D-6
PM50B5L1C060	600	50	168	2500	1.9	1.7	1.0	400	50	0.8	0.4	0.4	1.0	0.3	75	135	12	0.06	0.74	1.28	135	3	D-6
PM50B6L1C060	600	50	168	2500	1.9	1.7	1.0	400	50	0.8	0.4	0.4	1.0	0.3	75	135	12	0.06	0.74	1.28	135	3	D-6
PM75B4L1C060	600	75	337	2500	1.9	1.7	1.0	400	–	0.8	0.4	0.4	1.0	0.3	112	135	12	0.06	0.37	0.63	135	3	D-6
PM75B5L1C060	600	75	337	2500	1.9	1.7	1.0	400	75	0.8	0.4	0.4	1.0	0.3	112	135	12	0.06	0.37	0.63	135	3	D-6
PM75B6L1C060	600	75	337	2500	1.9	1.7	1.0	400	75	0.8	0.4	0.4	1.0	0.23	112	135	12	0.06	0.37	0.63	135	3	D-6

H-Bridge Module

PM50B4L1C060, PM75B4L1C060

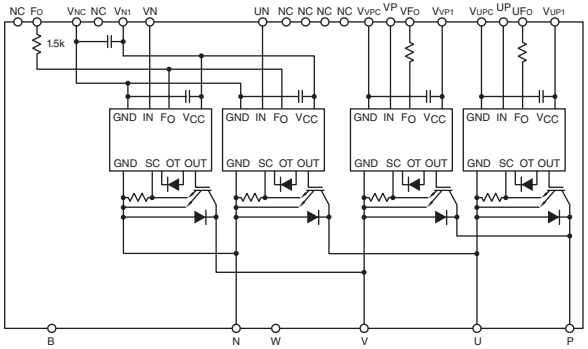

H-Bridge + 1 Chopper Module

PM50B5L1C060, PM75B5L1C060

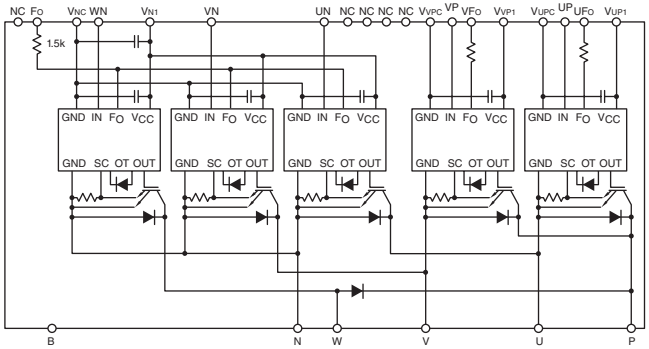

H-Bridge + 2 Choppers Module

PM50B6L1C060, PM75B6L1C060

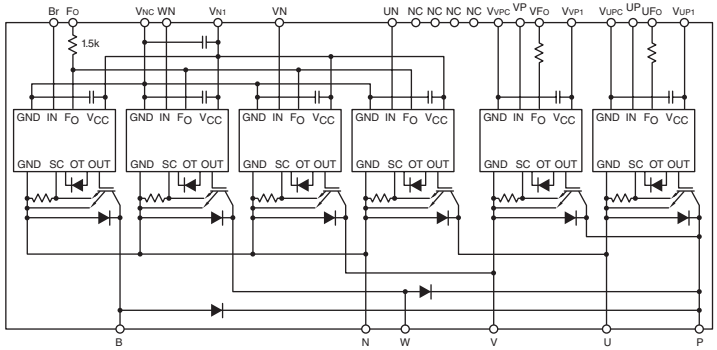

Numbering System

PM150RL1A120 is a 150 Ampere, 1200 Volt, 7-Pac L1-Series IPM

PM 150 R L1 A 120

(1) (2) (3) (4) (5) (6)

(1) PM = Intelligent Power Module (IPM)

(2) Current Rating: I_C (Amperes)

(3) C = 6-Pac
R = 7-Pac
B4 = H-Bridge
B5 = H-Bridge + 1 Chopper
B6 = H-Bridge + 2 Choppers
H = Single
D = Dual

(4) L = L-Series
L1 = L1-Series
C = HVIPM
V1 = V1-Series

(5) Package Outline

(6) Voltage V_{CES} Volts (x10)

модуль, igbt, мост диодный Минск +375447584780

www.fotorele.net www.tiristor.by радиодетали, электронные компоненты

email minsk17@tut.by tel.+375 29 758 47 80 мтс

Мы не работаем с частными (физическими) лицами.

Мы работаем только с юридическими лицами(организациями) и ИП и только по безналичному расчёту.

каталог, описание, технические, характеристики, datasheet, параметры, маркировка,габариты, фото

КАТАЛОГ МИНСК

модуль, igbt, модуль диодный

купить, продажа