3318nh3, 3314nh3, 3312nn, 3318nh, 3314nn, 3312nhh, 3314n/2hh, 3314n/2n, 3312n/2n, 3318n/2n, 3314gn
3314 gn, Вентиляторы ebm-papst, NMB Technologies, Orion, Delta Electronics, Sunon

max. 107 m^3/h

DC axial fans

Series 3300 92 x 92 x 32 mm

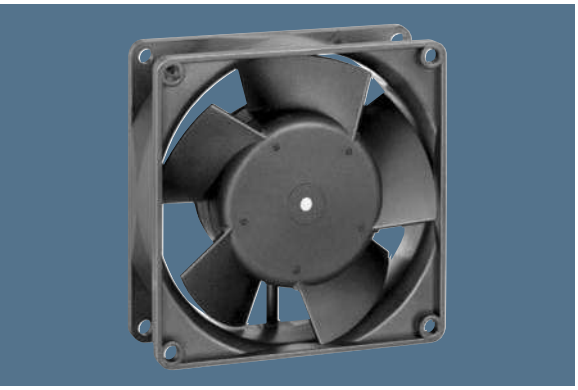

Highlights:

- Ball bearings and sleeve bearings available.
- Optional Vario-Pro: Highly adaptable software configuration of the fan enables a tailor-made solution to the specific requirements of your applications.

General characteristics:

- Material: fibreglass-reinforced plastic. Impeller PA, housing PBT.
- Fully integrated electronic commutation.
- Protected against reverse polarity and locking.
- Connection via single strands AWG 22, TR 64. Bared and tin-plated.
- Air exhaust over struts. Direction of rotation clockwise, seen on rotor.
- Mass: 190 g.

Nominal data	Air flow	Air flow	Nominal voltage	Voltage range	Sound pressure level	Sound power level	Sintec sleeve bearings / Ball bearings	Power input	Nominal speed	Temperature range	Service life L_{10} (40 °C) ebm-papst Standard	Service life L_{10} (T_{max}) ebm-papst Standard	Life expectancy $L_{10\Delta}$ (40 °C) see P. 15	Curve	Specials
Type	**m^3/h**	**CFM**	**VDC**	**VDC**	**dB(A)**	**Bel(A)**	□ / ■	**Watts**	**RPM**	**°C**	**Hours**		**Hours**	**P. 110-114**	
3312 L	56	33,0	**12**	6...15	29	4,5	■	1,4	2 150	-20...+75	80 000 / 35 000		147 500	1	
3312 GM	68	40,0	**12**	6...15	34	4,8	□	1,7	2 600	-20...+75	70 000 / 30 000		135 000	2	
3312 M	68	40,0	**12**	6...15	34	4,8	■	1,7	2 600	-20...+75	70 000 / 30 000		135 000	2	
3312	80	47,1	**12**	6...15	37	5,2	■	2,4	3 000	-20...+75	70 000 / 30 000		135 000	3	/2
3312-177	93	54,7	**12**	6...15	43	5,7	■	3,5	3 500	-20...+75	65 000 / 27 500		122 500	5	
3314 G	80	47,1	**24**	12...28	37	5,2	□	2,6	3 000	-20...+75	70 000 / 30 000		135 000	3	
3314	80	47,1	**24**	12...28	37	5,2	■	2,6	3 000	-20...+75	70 000 / 30 000		135 000	3	/17
3314-140	85	50,0	**24**	12...28	40	5,4	■	3,0	3 200	-20...+75	70 000 / 30 000		135 000	4	
3314 H	107	63,0	**24**	12...28	47	6,0	■	5,3	4 000	-20...+75	57 500 / 25 000		112 500	6	/2
3318	80	47,1	**48**	36...56	37	5,2	■	2,7	3 000	-20...+75	70 000 / 30 000		135 000	3	/2
3318 H	107	63,0	**48**	36...56	47	6,0	■	4,3	4 000	-20...+60	57 500 / 35 000		112 500	6	/2/17

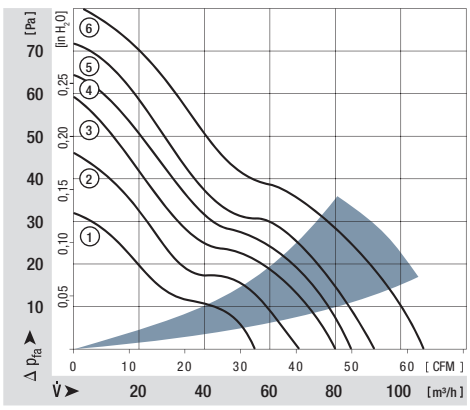

Rotor protrusion max. 0,4 mm.

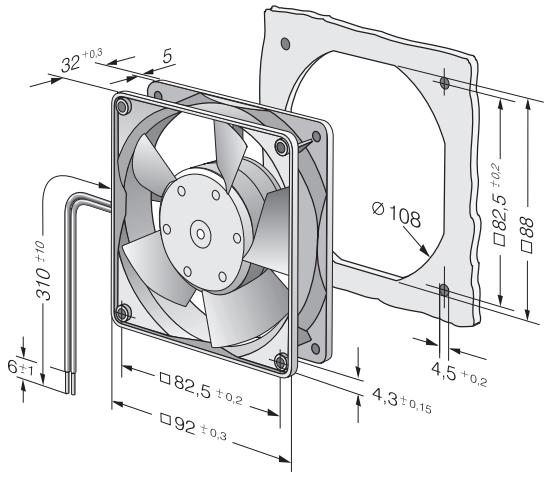

NG IT II PWM A HP IP54 SP

ebmpapst

max. 280 m^3/h

DC axial fans

Series 3200 J 92 x 92 x 38 mm

Highlights:

- Very rigid compression curve for high air flow at high back pressure.
- Innovative impeller with winglets for low noise.
- Optional Vario-Pro: Highly adaptable software configuration of the fan enables a tailor-made solution to the specific requirements of your applications.

General characteristics:

- Material: fibreglass-reinforced plastic. Impeller PA, housing PBT.
- Fully integrated electronic commutation. Protected against reverse polarity and locking.
- Connection via single strands AWG 24 (H3 and H4: AWG 22), TR 64. Bared and tin-plated.
- Air exhaust over struts. Direction of rotation clockwise, seen on rotor.
- Mass: 240 g (H3 and H4: 280 g).

Nominal data	Air flow	Air flow	Nominal voltage	Voltage range	Sound pressure level	Sound power level	Sintec sleeve bearings / Ball bearings	Power input	Nominal speed	Temperature range	Service life L_{10} (40 °C) ebm-papst Standard	Service life L_{10} (T_{max}) ebm-papst Standard	Life expectancy $L_{10\Delta}$ (40 °C) see P. 15	Curve	Specials
Type	**m^3/h**	**CFM**	**VDC**	**VDC**	**dB(A)**	**Bel(A)**	□ / ■	**Watts**	**RPM**	**°C**	**Hours**		**Hours**		**P. 110**
3212 JN	130	76,5	**12**	7...13,8	51	6,1	■	7,5	6 000	-20 ...+70	70 000 / 35 000		140 000	1	/2
3212 JH	146	86,0	**12**	7...15	55	6,4	■	9,0	6 800	-20 ...+70	70 000 / 35 000		140 000	2	/2
3212 JH3 S-Force	237	139,5	**12**	6...13,8	69	7,8	■	30,0	11 000	-20 ...+70	65 000 / 32 500		130 000	3	/2
3212 JH4 S-Force	280	164,8	**12**	6...13,8	73	8,2	■	50,0	13 000	-20 ...+70	60 000 / 30 000		120 000	4	/2
3214 JN	130	76,5	**24**	11...28	51	6,1	■	8,0	6 000	-20 ...+70	70 000 / 35 000		140 000	1	
3214 JH	146	86,0	**24**	11...30	55	6,4	■	9,0	6 800	-20 ...+70	70 000 / 35 000		140 000	2	/2
3214 JH3 S-Force	237	139,5	**24**	12...27,6	69	7,8	■	30,0	11 000	-20 ...+70	65 000 / 32 500		130 000	3	/2
3214 JH4 S-Force	280	164,8	**24**	12...27,6	73	8,2	■	50,0	13 000	-20 ...+70	60 000 / 30 000		120 000	4	
3218 JN	130	76,5	**48**	36...56	51	6,1	■	7,0	6 000	-20 ...+70	70 000 / 35 000		140 000	1	
3218 JH	146	86,0	**48**	36...53	55	6,4	■	9,5	6 800	-20 ...+70	70 000 / 35 000		140 000	2	
3218 JH3 S-Force	237	139,5	**48**	20...58,0	69	7,8	■	30,0	11 000	-20 ...+70	65 000 / 32 500		130 000	3	/2
3218 JH4 S-Force	280	164,8	**48**	20...58,0	73	8,2	■	50,0	13 000	-20 ...+70	60 000 / 30 000		120 000	4	

3200 JH3 and JH4 also as standard with PWM control input and speed signal.
Speed control range from 2000 RPM up to maximum nominal speed. Stationary at 0 % PWM, maximum speed at sensor break.

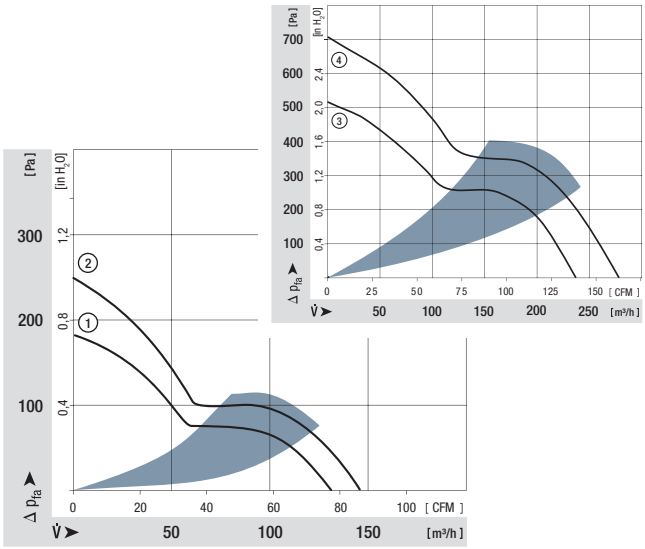

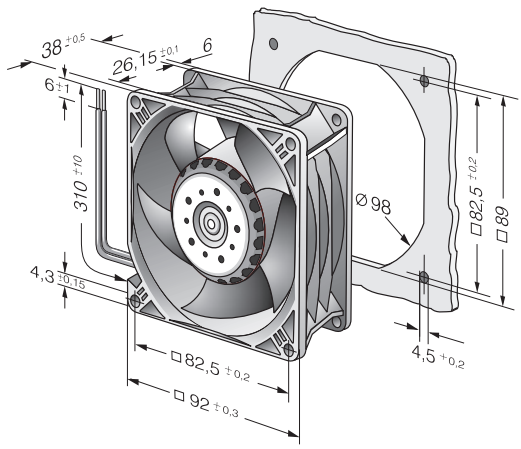

3314 NHH

DC axial fan

ebm-papst St. Georgen GmbH & Co. KG
Hermann-Papst-Str. 1
D-78112 St. Georgen
Phone +49 (0) 7724 81-0
Fax +49 (0) 7724 81-1309
info2@de.ebmpapst.com
www.ebmpapst.com

Nominal data

Type	3314 NHH	
Nominal voltage	V	24
Nominal voltage range	V	12 .. 28
Speed (rpm)	min^{-1}	3450
Power consumption	W	3.4
Min. ambient temperature	°C	-20
Max. ambient temperature	°C	75
Air flow	m^3/h	107
Sound power level	B	5.4
Sound pressure level	dB(A)	42

ml = Max. load · me = Max. efficiency · fa = Free air · cs = Customer specification · ce = Customer equipment
Subject to change

DC axial fan

Technical description

Weight	0.19 kg
Dimensions	92 x 92 x 32 mm
Impeller material	Glass-fiber reinforced PA plastic
Housing material	Glass-fiber reinforced PBT plastic
Airflow direction	Exhaust over struts
Direction of rotation	Clockwise, viewed toward rotor
Bearing	Ball bearing
Service life L10 at 40 °C	67.500 h
Service life L10 at maximum temperature	27.500 h
Cable	With leads AWG 24 UL 1061, TR 64

ebm-papst St. Georgen GmbH & Co. KG · Hermann-Papst-Str. 1 · D-78112 St. Georgen · Phone +49 (0) 7724 81-0 · Fax +49 (0) 7724 81-1309 · info2@de.ebmpapst.com · www.ebmpapst.com

DC axial fan

Product drawing

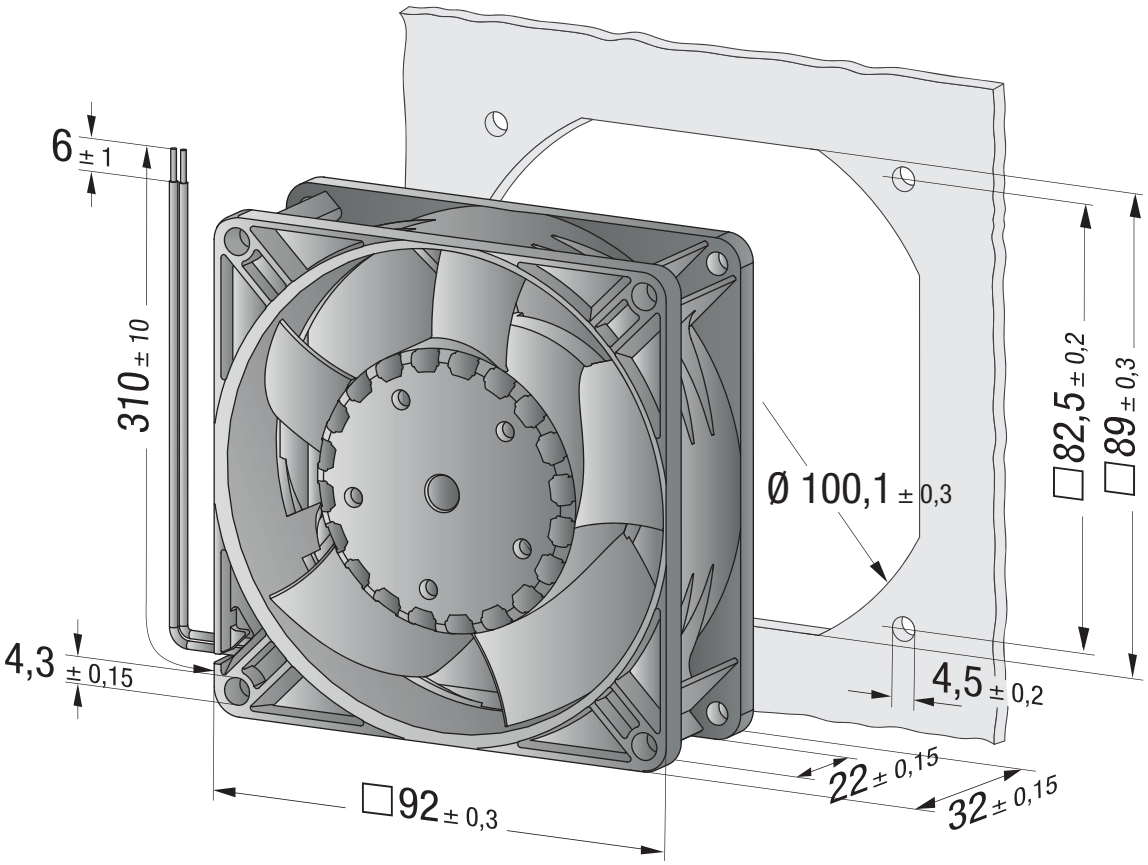

ebm-papst St. Georgen GmbH & Co. KG · Hermann-Papst-Str. 1 · D-78112 St. Georgen · Phone +49 (0) 7724 81-0 · Fax +49 (0) 7724 81-1309 · info2@de.ebmpapst.com · www.ebmpapst.com

DC axial fan

Curves

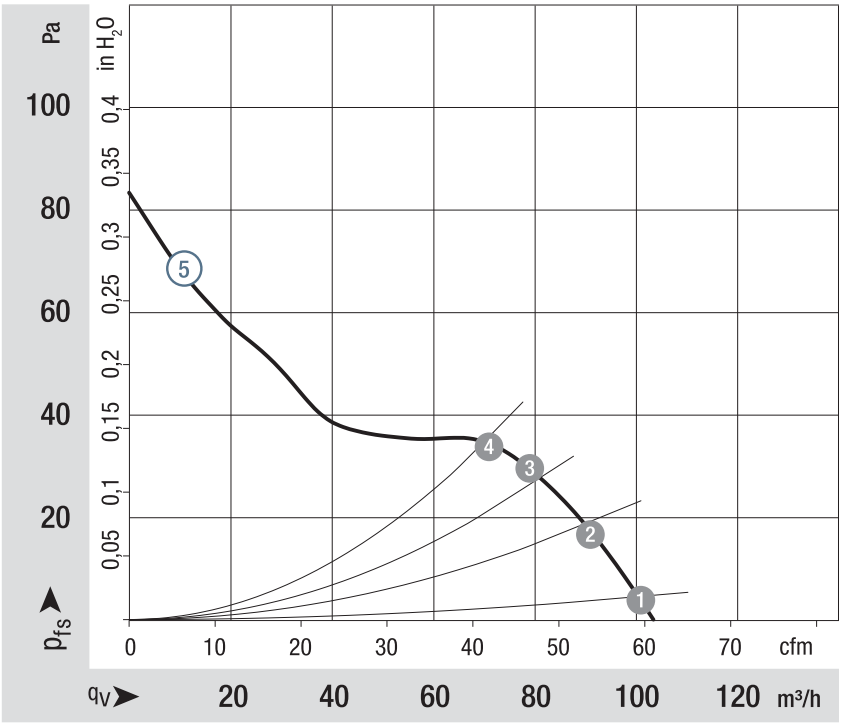

ebm-papst St. Georgen GmbH & Co. KG · Hermann-Papst-Str. 1 · D-78112 St. Georgen · Phone +49 (0) 7724 81-0 · Fax +49 (0) 7724 81-1309 · info2@de.ebmpapst.com · www.ebmpapst.com

DC axial compact fan

ebm-papst St. Georgen GmbH & Co. KG
Hermann-Papst-Straße 1
D-78112 St. Georgen
Phone +49 7724 81-0
Fax +49 7724 81-1309
info2@de.ebmpapst.com
www.ebmpapst.com

Nominal data

Type	3314	
Nominal voltage	VDC	24
Nominal voltage range	VDC	12 .. 28
Speed	min^{-1}	3000
Power input	W	2.6
Min. ambient temperature	°C	-20
Max. ambient temperature	°C	75
Air flow	m^3/h	80
Sound power level	B	5.2
Sound pressure level	dB(A)	37

ml = max. load · me = max. efficiency · fa = running at free air · cs = customer specs · cu = customer unit
Subject to alterations

DC axial compact fan

Technical features

General description	Particular design features: Ball bearings and sleeve bearings available. Optional Vario-Pro: Highly flexible software configuration for the fan ensures an easily customisable solution to meet the individual requirements of your application. General features: Material: fibreglass-reinforced plastic. Impeller PA, housing PBT. Electronic commutation completely integrated. Protected against reverse polarity and locking. Connection via single strands AWG 22, TR 64, bared and tin-plated. Air exhaust over bars. Rotational direction clockwise looking at rotor. Mass: 190 g.
Mass	0.190 kg
Dimensions	92 x 92 x 32 mm
Material of impeller	Fiberglass-reinforced PA plastic
Housing material	Fiberglass-reinforced PBT plastic
Direction of air flow	Air exhaust over bars
Direction of rotation	Right, looking at rotor
Bearing	Ball bearings
Lifetime L10 at 40 °C	70000 h
Lifetime L10 at maximum temperature	30000 h
Connection line	Single strands AWG 22, TR 64, bared and tin-plated.
Motor protection	Protected against reverse polarity and locking.
Approval	VDE, CSA, UL

ebm-papst St. Georgen GmbH & Co. KG · Hermann-Papst-Straße 1 · D-78112 St. Georgen · Phone +49 7724 81-0 · Fax +49 7724 81-1309 · info2@de.ebmpapst.com · www.ebmpapst.com

DC axial compact fan

Product drawing

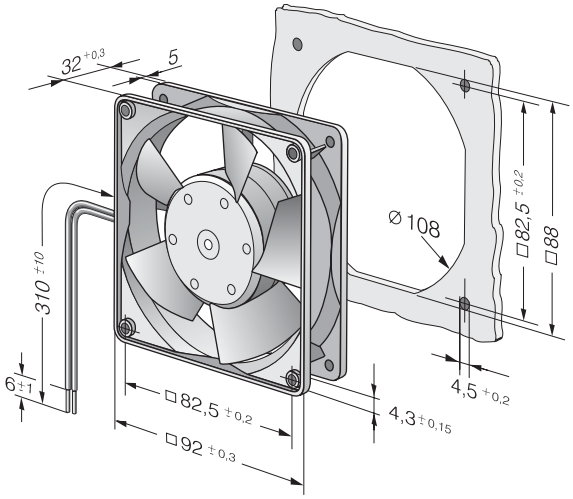

ebm-papst St. Georgen GmbH & Co. KG · Hermann-Papst-Straße 1 · D-78112 St. Georgen · Phone +49 7724 81-0 · Fax +49 7724 81-1309 · info2@de.ebmpapst.com · www.ebmpapst.com

DC axial compact fan

Charts: Air flow

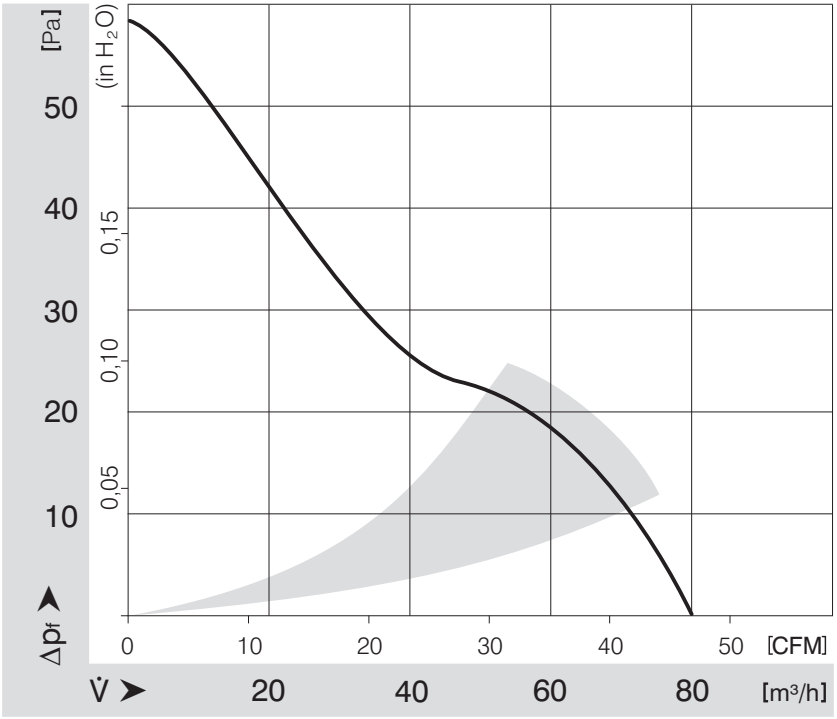

ebm-papst St. Georgen GmbH & Co. KG · Hermann-Papst-Straße 1 · D-78112 St. Georgen · Phone +49 7724 81-0 · Fax +49 7724 81-1309 · info2@de.ebmpapst.com · www.ebmpapst.com

Вентилятор ebmpapst, купить в Минске tel. +375447584780
www.fotorele.net www.tiristor.by радиодетали, электронные компоненты
email minsk17@tut.by tel.+375 29 758 47 80 мтс

ebm papst, аналог, замена , Минске, каталог, описание, технические, характеристики, datasheet, параметры, маркировка,габариты, фото, QR код