в Беларуси Заказ г.Минск viber и тел.+375447584780 email: minsk17@tut.by

Schmersal **Минск т.80447584780** Viber **email minsk17@tut.by**
www.fotorele.net www.tiristor.by радиодетали, электронные компоненты
tel.+375 29 758 47 80 мтс

каталог, описание, технические, характеристики, datasheet, параметры, маркировка, габариты, фото, даташит, Schmersal

где и как купить в Минске?

Сделать заявку или запрос можно по телефону факсу или по электронной почте
Просим Вас указывать в заявке:
— название предприятия, факс, контактный телефон, контактное лицо;
— полное наименование и количество товара;
— возможность замены или аналоги;

Каталог Schmersal

Автоматизация

Герконы
Датчики безопасности
Индуктивные датчики IFL
Концевые выключатели
Микропереключатели
Переключатели с тросовым приводом
Переключатели механизмов
Переключатели положения ленты
Позиционные переключатели с функцией безопасности
Проволочные переключатели
Фотоэлектрические датчики приближения
Энкодеры

Безопасное переключение и мониторинг Schmersal

Аварийные выключатели
Блокиратор дверей
Выключатели безопасности для ограждений
Двуручные пульты управления
Кнопки аварийного останова
Ножные переключатели
Панели управления
Позиционные переключатели с функцией безопасности
Предохранительные выключатели с раздельным приводом
Световые барьеры безопасности
Световые решетки и световые завесы
Соленоидные блокировщики

Обработка сигналов

Защитные дверные мониторы и модули контроля безопасности
Многофункциональные модули безопасности
Отказоустойчивые мониторы и таймеры
Программируемые контроллеры
Расширители

Продукция Schmersal

Продукция компании

в Беларуси Заказ г.Минск viber и тел.+375447584780 email: minsk17@tut.by

Protection – ATEX

Explosion Protection Catalogue | Version 05

SCHMERSAL

Safe solutions for your industry

в Беларуси Заказ г.Минск viber и тел.+375447584780 email: minsk17@tut.by

www.schmersal.net

You will also find detailed information regarding our product variety on our website: www. schmersal.net.

Online documentation in 13 languages

The online catalogue for our customers is permanently updated. The Main catalogue can be consulted on the Internet in as much as 13 languages.
The technical data of our entire product range are always up-to-date. The declarations of conformity, the test certificates and the mounting instructions can be consulted or even downloaded as well.

Service for designers

The online catalogue also includes the technical drawings of our products – a special service to designers. In this way, they can be downloaded and directly fed in CAD-systems.
The Schmersal homepage furthermore contains up-to-date information on general subjects, technical articles on machine safety as well as news regarding events and trainings. To be bookmarked!

The direct way

If you need further information or you want personal advice, you can call us as well:
+ 49-(0) 2 02-64 74-0.
The addresses of our representations in Germany and abroad can be found on the front pages of this catalogue.

We are at your disposal – anyplace, anywhere, anytime!

Attention!

The data specified in this catalogue are carefully checked typical standard values.
Subject to technical modifications and error.

в Беларуси Заказ г.Минск viber и тел.+375447584780 email: minsk17@tut.by

Content

Introduction	The basics of explosion protection	4
Safety-monitoring modules	PROTECT SRB 101EXi	16
	PROTECT SRB 200EXi	18
Safety switch	EX-AZ 16-…-3D	22
	EX-AZ 335-…-3D	25
	EX-AZ 355-…-3D	26
	EX-AZ 415-…-3D	28
	EX-AZ 3350-…-3D	30
Solenoid interlocks	EX-AZM 170-…-3G/D	34
	EX-AZM 161-…-3D	36
	EX-AZM 415-…-3D	40
Position switches	EX-Z/T 235-…-3D	44
	EX-Z/T 335-…-3G/D	54
	EX-Z/T 355-…-3G/D	55
	EX-MAF 330-…-3D	60
	EX-T 335-…	62
	EX-T/M 441-…	68
	EX-T/M 250-…	69
	EX-TS 064-…	70
	EX-MS 064-…	71
	EX-T. 064-…	73
	EX-M. 064 R	74
	EX-M. 064 L	75
Safety switch for hinged guards	EX-TV.S 335	78
Belt alignment switches / Slack-wire switch	EX-T/M 441-…	82
	EX-T/M 250-…	83
Pull-wire emergency-stop switches	EX-ZQ 900-3D	86
	EX-T3Z 068-…	88
Safety sensors	EX-BNS 250-…-3G/D	92
	EX-BNS 33-…-3G/D	94
	EX-BNS 120-…-3G/D	96
	EX-BNS 180-…-3G/D	98
	EX-BNS 303-…-3G/D	100
	EX-CSS 180-…-3G/D	102
Magnetic reed switches	EX-BN 20-…-3G/D	106
Control devices and indicator lights	EX-RDT	114
	EX-RDM	114
	EX-RDL	115
	EX-RDLM	115
	EX-RMLH	116
	EX-RDP40	117
	EX-RDRZ45	118
	EX-RDRZ45rt	119
	EX-RW...21/32	120
	EX-RW...21.1/32.1	120
	EX-RS	122
	EX-RF10	124
	EX-RF03	124
	EX-RLDE ws 24	125
	EX-EBG 331.O	126
	EX-EBG 633.O	126
	EX-EBG 665.O	126
Trapped key system	EX-SHGV-…-3G/D (selector switch; key-operated selector switch)	134
	EX-SVM1-…-2G/D (interlocking device)	135
	EX-SHGV-…-2G/D (guard locking device)	136

в Беларуси Заказ г.Минск viber и тел.+375447584780 email: minsk17@tut.by

The basics of explosion protection

The implementation of the ATEX Directives (ATEX: ATmosphères EXplosibles) in Europe has changed the way of thinking with regard to the explosion protection. The manufacturers must follow the directive 94/4/EC to fulfill the harmonised standars in Europe. The directive is obligatory in all Member States and transposed into national law. This was carried out until 2003. On the other side the users have to fulfill the directive 1999/92/EC regarding the basic safety and health requirements for operation. Both Directives are based upon the standards listed in the Official Journal (OJ) of the European Commission. Not only the gas explosive protection is now standardised, but also the protection for dust atmospheres. In a few countries, e.g. in Germany, explosion protection regulations existed already at national level, however not harmonised.
Due to the internationalisation and the standardisation on EN basis, the standards defining the requirements on equipment to be used in explosive atmospheres will gradually be replaced by the European Standards series EN 60079. Hybrid mixtures from gas and dust are included in the standardisation work as well. The mechanical explosion protection required by the ATEX Directives however still is in its “infancy”.
The comprehensive product portfolio from Schmersal and Elan Schaltelemente complies with the requirements of the standards and directives. Our existing products and our innovations are consistently developed and refined on the basis of the current standards as well as the amendments, which are in the transitional stage. In this way, both the standard requirements and safety technology are integrated in the potentially explosive areas.

Source of ignition	Examples of the cause
Sparks	Mechanically generated sparks (e.g. by friction, stroke or cutting removal operations), electric sparks
Electric arcs/flashovers	Short-circuit, switching operations
Hot surfaces	Current in electrical installations, heaters and radiators, machining, heating during operation
Flames and hot gases	By combustion reactions, spark projection during welding
Electrical installations	Even extra-low voltages (U < 50 V) still can generate sufficient energy to ignite an explosive atmosphere. Opening/closing of contacts, loose or defective contacts
Static electricity	Separately arranged conductive parts, many plastics
Equalizing currents	Reverse current from generators, earth connection in case of faults, induction
Electromagnetic waves in the 3×10^{11} ... 3×10^{15} Hz range	Laser beam for range finding, especially in case of beam focusing
High frequency 10^4 ... 3×10^{12} Hz	Radio signals, industrial high-frequency generators for heating, drying, cutting, etc.
Lightning	Atmospheric disturbances
Ionizing radiation	X-ray device, radioactive substances, energy absorption leads to heating
Ultrasonic	Energy absorption in solid/liquid substances leads to heating
Adiabatic compression and shock waves	Strokewise opening of valves
Exothermal reactions	Chemical reaction

в Беларуси Заказ г.Минск viber и тел.+375447584780 email: minsk17@tut.by

The basic physic and technical principles
Complete combustion
Combustion or burning is a complex sequence of exothermic chemical reactions. A fire starts when a flammable and/or combustible material with an adequate supply of oxygen is exothermically disintegrated. Depending on the speed of combustion, we speak of deflagration, explosion or detonation.
A complete combustion causes significant damages, which various with the combustion speed.
Order of magnitude of the speed of combustion

Deflagration	cm/s
Explosion	m/s
Detonation	km/s

Explosion
An explosion can only occur, when three factors come together: flammable material in ignitable quantities, oxygen and an ignition source. If one component is missing, no exothermic reaction will occur.

Oxygen
When a flammable substance is mixed with oxygen, a potentially explosive mixture is created. For gases, the concentration ratio determines whether an explosion is possible. The mixture can only be ignited if the concentration of the substance in air is within the lower and upper explosive limits. Mixtures with concentrations smaller or greater these limits will not explode. A few chemically unstable substances (e.g. acetylene, ethylene oxide) have self-decomposing properties and therefore can also produce exothermal reactions without oxygen.
In these cases, the upper explosion limit (UEL) is 100 vol. %. For pressurised gases, the explosion ranges change. Dusts are also classified by a lower explosion limit (approx. at 20…60 g/m³) and an upper explosion limit (approx. at 2…6 kg/m³).

Potentially explosive substance
Any flammable substance in the form of gas, mist, vapour or dust is considered as potentially explosive substance. For mists and dusts, a potentially explosive atmosphere occurs when the drop or the particle size is smaller than 1 mm. Frequently-used mists, aerosols and dusts have a particle size between 0.001 mm and 0.1 mm. Dusts with larger particle sizes are not combustible.
Deposits of dust can be compared to porous elements and have hollow portion of up to 90%. The increase of temperature of dust deposits can cause the spontaneous ignition of the dust-like flammable substance. If a deposit of dust with small particle size is swirled up, the dust, along with the oxygen in the air, forms a combustible dust/air mix. The bigger the size reduction, the higher the explosion danger, since the surface of the hollow space increases. Dust explosions are often the consequence of smouldering dust layers which become stirred up and already carry the ignition initiation.

The potential danger of explosive dust atmospheres and the selection of the appropriate safety measures are evaluated by means of the safety characteristics of the substances concerned. To this end, dusts are classified in accordance with two of their substance-specific properties:
- Conductivity
  Dusts are considered to be conductive when they have a specific electric resistance of up to 10^3 ohmmeters.
- Combustibility
  Combustible dusts are characterised by the fact that they can burn or smoulder when mixed with air and that they form explosive mixtures along with oxygen under atmospheric pressure and at temperatures ranging from – 20°C to + 60°C.

The safety characteristics of swirled up dusts are for instance the minimum ignition energy and the ignition temperature, whereas for deposits of dust the smouldering temperature is a characteristic feature.

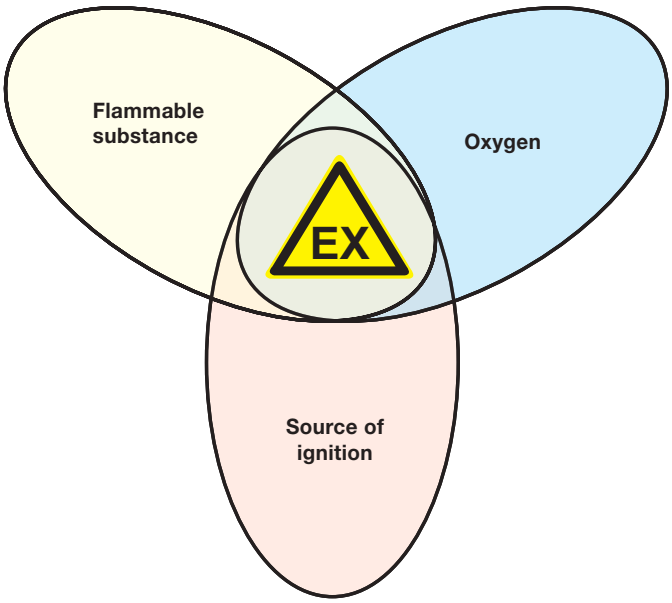

в Беларуси Заказ г.Минск viber и тел.+375447584780 email: minsk17@tut.by

The basics of explosion protection

EN 60079-10/14

Classification of zones and selection of equipment
Setting-up installations in potentially explosive areas involves a great deal of precautions to be taken. For instance, the equipment, the resources, the cables and conductors as well as the construction have to meet special requirements. In case of doubt, the consultation of experts during the planning is recommended.

Risk assessment
It is the responsibility and duty of the user to perform a risk analysis prior to installing new facilities.
He must verify where there is a risk of explosion and then divide areas into zones accordingly. Every plant must be examined for its particularities.
If nonetheless an explosion would be caused, the possible hazard scenario must be taken into consideration in the forefront. Can chain reaction occur, are damages to the building to be expected and which are the impacts of the explosion of subsequent plant components and parts?
Potential interactions with adjacent plants can occur, which cannot be produced on the individual plant.
The risk analysis requires a great deal of experience as well as a correct assessment.
In case of doubt, consulting experts on this matter is highly recommended, considering that the risk analysis builds the basis of all further measures to be taken before the installation can be put into operation.

Analysis of the explosion protection risk
The user of a machine or installation has to perform an accurate analysis according to the standards EN 60079-10, EN 60079-14 and EN 1127-1. On the basis of this analysis, he has to classify the areas in which explosive atmospheres may be present into zones. These observations must be documented.

Documentation of the explosion protection
The documentation is essential to ensure a safe operation of the installation in the potentially explosive area. It is drawn up prior to the set-up and must always be kept up-to-date.
In case of changes to the installation, all the described influences data must be taken into account.

Example of an explosion protection document
Object responsible
Called by name in the documentation
Description of the structural/constructional and geographic conditions
Layout plan, building map, plant ventilation system
Description of the procedure, description of the plant with regard to explosion protection
Substance characteristics, list of all data including explosion-relevant parameters
Risk analysis, refer to checklist below
Protection concept, zone classification, explosion protection types used
Organisational measures
Instructions, prescriptions in written, work authorisations

в Беларуси Заказ г.Минск viber и тел.+375447584780 email: minsk17@tut.by

Classification of the potentially explosive areas into zones

To determine the necessary protective measures to be taken and to select appropriate equipment, the potentially explosive areas have to be classified into zones. This classification of the potentially explosive areas into zones is based upon the frequency and the duration of the presence of the dangerous explosive atmosphere.

These framework conditions (frequency, duration) determine the classification and identification of gas explosion risk areas as zone 0, 1 or 2 as well as the required measures to be taken in order to avoid active sources of ignition.

Dust explosion risk areas are accordingly classified as zone 20, 21 or 22.

The EN 60079-10 standard can provide help with the classification of gas explosion risk areas into zones. The zone definition is included in all common documentation, i.e. in the ATEX Directive 1999/92/EC as well.

Zone 0 is an area, in which an explosive atmosphere consisting of a mixture with air of flammable substances in the form of gas, vapour or mist is present continuously or for long periods or frequently.

- Example: these conditions are usually found only inside containers, pipes, apparatus (evaporators, reaction chambers etc.).

Zone 1 is an area, in which an explosive atmosphere consisting of a mixture with air of flammable substances in the form of gas, vapour or mist is likely to occur occasionally in normal operation.

- Example: areas in the immediate surroundings of zone 0, of intakes and inlets, the areas around filling units and discharging equipment, the immediate surroundings of highly fragile apparatus or conductors in glass, ceramics etc., the area around insufficiently sealing gaskets, e.g. on pumps and dampers, the interior of apparatus such as evaporators and reaction chambers.

Zone 2 is an area, in which an explosive atmosphere consisting of a mixture with air of flammable substances in the form of gas, vapour or mist is not likely to occur in normal operation but, if it does occur, will persist for a short period only.

- Example: areas surrounding zone 0 or 1, specific storage plants

Zone 20 is an area, in which an explosive atmosphere in the form of a cloud of combustible dust in air is present continuously or for long periods or frequently.

- Example: these conditions are usually found only inside containers, pipes, apparatus, e.g. mills and grinders, dryers, mixers, feed pipes, silos etc.

Zone 21 is an area, in which an explosive atmosphere in the form of a cloud of combustible dust in air is likely to occur occasionally in normal operation.

- Example: also areas in the vicinity of inlets or work stations where dust is poured into containers, as well as areas where there are dust deposits and where a combustible dust/air mixture could form in the course of normal operation.

Zone 22 is an area, in which an explosive atmosphere in the form of combustible dust in air is not likely to occur in normal operation but, if it does occur, will persist for a short period only.

- Example: this could also include areas in the vicinity of devices containing dust, protection systems or components from which dust leaks and forms deposits (e.g. milling/grinding facilities, from which dust leaks and forms layers)

Dust Ex: selection according to the smouldering temperature and the ignition temperature

When selecting electrical apparatus for use in dust explosion risk areas, the smouldering temperature of the deposited dust and the ignition temperature of the potentially explosive dust/air mixture must be known, regardless of the zone.

The smouldering temperature is the lowest temperature of a hot surface on which a dust deposit of a defined thickness is ignited.

The ignition temperature of a dust cloud is the lowest temperature of a heated wall of an oven that ignites the dust/air mixture upon brief contact.

Combustible dusts are not divided into temperature classes like gases. The maximum surface temperature must be mentioned on the electrical equipment.

The table below summarizes the explosion parameters (ignition temperature, smouldering temperature and minimum ignition energy) of a few dusts.

Please note that for flammable substances a collective name, e.g. mill dust, designates different kinds of that product, each of them with diverging safety characteristics and parameters. Wheat flour for instance has other parameters than rye flour.

The specific parameters of the dust, which is permanent in each dust explosive area, must be determinated. When the parameters of collective names are used, miscalculations can occur.

Substance	Ignition temperature Ti [°C]	Smouldering temperature Ts [°C]	ø Minimum energy ø Emin [mJ]
Flour	≥ 380	≥ 300	≥ 30
Wood	≥ 410	≥ 200	≥ 100
Brown coal	≥ 380	≥ 225	–
Coal	≥ 500	≥ 240	≥ 1000
PVC	≥ 530	≥ 340	≥ 5
Aluminium	≥ 560	≥ 270	≥ 5
Sulphur	≥ 240	≥ 250	10

в Беларуси Заказ г.Минск viber и тел.+375447584780 email: minsk17@tut.by

The basics of explosion protection

Types of protection
General overview
Essential requirements
The EN 60079-0 describes the essential requirements, which apply to all types of explosion protection.

Mechanical protection
Mechanical tests are carried out in accordance with EN 60079-0. The enclosures or the exterior part of the enclosure, pushbuttons must withstand highimpact energy.

Type of protection „n“ EN 60079-15
The type of protection “n” originally was used as stand-alone standard for use in ATEX category 3G respectively was defined as zone 2 standard in IECEx. This standard has been designed for normal operation. The fault analysis, which is performed for the other types of protection, is not executed, considering that the explosive atmosphere and the ignition spark are very unlikely to occur simultaneously in zone 2; in other words: electrical apparatus cannot ignite an explosive atmosphere surrounding them in normal operation and under defined abnormal operating conditions.
Meanwhile, the EN 60079-15 has been rewritten, so that the essential requirements are now described in the EN 60079-0.
This reflects for instance in the following way: The type of protection Ex nL has been replaced with the Ex ic type of protection relative to intrinsic safety. The sub-group is transferred from the EN 60079-15 into the EN 60079-11. This leads to changes, which could require a more accurate analysis.

Temperature classes for gases (EN 60079-0):

Classification of the maximum surface temperature into classes for electrical apparatus belonging to Equipment Group II

T1	T2	T2	T4	T5	T6
450°C	300°C	200°C	135°C	100°C	85°C

Ignition protection type and the main characteristics

Ignition protection type	Basic principle, main application
Oil immersion „o“	The source of ignition is permanently immersed in oil. Application: switchgear and transformers
Pressurized enclosures „p“	The formation of a potentially explosive atmosphere inside an enclosure is prevented by maintaining a positive internal pressure of protective gas in relation to the surrounding atmosphere. Application: machinery, commutation motors, control cabinets, monitors, keyboards, analysers
Powder filling „q“	A fine granular packing material surrounds the ignition source, thus making it impossible for an electric arc created in the enclosure under certain operating conditions to ignite a potentially explosive atmosphere surrounding the enclosure. Application: capacitors, condensers, electronic ballast, sensors
Flameproof enclosures „d“	Parts which can ignite a potentially explosive atmosphere are surrounded by an enclosure which withstands the pressure of an explosive mixture exploding inside the enclosure and prevents the transmission of the explosion to the atmosphere surrounding the enclosure. Application: switchgear, spark-generating parts, power engineering, heavy-current engineering
Increased safety „e“	Additional measures are applied to increase the level of safety, thus preventing the possibility of excessive temperatures and the occurrence of sparks or electric arcs within the enclosure or on exposed parts of electrical apparatus, where such ignition sources would not occur in normal service. Application: terminal and connection boxes (engines)
Encapsulation „m“	Parts that are capable of igniting an explosive atmosphere by either sparking or heating are enclosed in a compound in such way as to avoid ignition of an explosive atmosphere. Application: sensors, variable speed drives
Intrinsic safety „i“	An electric circuit is intrinsically safe if no sparks or thermal effects produced under specified test conditions are not capable of causing ignition of a given explosive atmosphere. Application: measurement and control technology
Intrinsically safe systems „i-SYST“	The entirety of interlinked and interconnected electrical apparatus, documented by a system description. Circuits used completely or partly inside hazardous areas are intrinsic safe.

в Беларуси Заказ г.Минск viber и тел.+375447584780 email: minsk17@tut.by

Intrinsic safety
Principle
The type of protection “intrinsic safety” Ex i is based on the principle of limitation of current, voltage and storable energy within an electric circuit. Intrinsic safety does not reduce the potentially explosive substance and/or the oxidizing agent.
The ignition of an explosive mixture is avoided, when neither electric sparks nor the effect of heat can occur. The electrical energy is limited in order to keep electrical sparks below the ignition limit.
The energy limitation avoids the excessive heating of the electrical apparatus and its surfaces. This also applies to the sensors integrated in the intrinsically safe electrical circuits. Electrical energy can be stored in capacities (condensers) or inductivities (coils) within the intrinsically safe electrical circuit.
Zener diodes, which are used for limiting voltage, become conductive as of a specific voltage. The increased voltage is conducted through the zener diode, i.e. the electrical circuit in the EX zone has limited voltage.
A series-wired resistance limits the current in the potentially explosive area.

$I_{max} = I_o = U_o/R$

With the limitation of voltage and current, the maximum power is

$P_o = U_o^2 / 4R$

The authorised maximum values are taken from the ignition limit curves, defined in the EN 60079-11 standard. For the gas groups I, IIA, IIB and IIC, there are four ignition limit curves. The classification is done according to the ignition energy.
The ignition limit curves have been calculated by means of a spark tester, as described in the EN 60079-11 standard.

Subdivision of the type of protection „n“ Ex n in Europe

Symbol	Meaning	Comparable with	Method	Subdivision
A	Non-sparking	Ex e	Occurrence of electric arcs, sparks or hot surfaces is minimised	None
C	Sparking apparatus	Partially Ex d, Ex m	Enclosed switching device, non-explosive components hermetically closed, sealed or encapsulated devices	IIA, IIB, IIC
R	Vapour-tight enclosure	–	Penetration of explosive gases is reduced	None
L*	Energy limitation	Ex i	Energy limitation, so that neither sparks nor thermal effects can produce an ignition	IIA, IIB, IIC
P	Simplified pressurized enclosure	Ex p	Penetration of explosive gases is avoided by overpressure. The monitoring unit will not switch-off	None

*different in North-America and Europe

в Беларуси Заказ г.Минск viber и тел.+375447584780 email: minsk17@tut.by

The basics of explosion protection

EN 60079-11

Electrical apparatus and associated apparatus

An intrinsically safe electric circuit contains at least one electrical apparatus and one associated apparatus.
The electric circuits of the electrical apparatus meet the requirements of the intrinsic safety. The electrical apparatus must only be connected to non-intrinsically safe circuits through associated apparatus. An associated apparatus possesses both intrinsically safe and non-intrinsically safe circuits. To separate the electric circuits, a zener diode or galvanic isolators are used. The EN 60079-11 describes this separation calls as a “safety barrier”.
Intrinsically safe electrical apparatus and intrinsically safe components from associated equipment are classified in different levels of protection “ia”, “ib” and “ic” according to EN 60079-11. This classification is included as of the 5th edition of the IEC Ex version.
The “ia” category basically offers the highest level of protection, “ib” a higher level of protection and “ic” a high level of protection.
The category “ia” or “ib” determines whether the protective circuit offers a single fault safety or a double fault safety. For protection level “ic”, no fault analysis is performed.

Here the safety for normal operation is sufficient. Therefore, the standard EN 60079-14, chapter 12.3 recommends galvanic isolation for intrinsically safe circuits in zone 0, category “ia”. For intrinsic safety, a fault analysis is performed to exclude explosion risks. However, no statement whatsoever is made with regard to the operational safety. This means that a functional total breakdown is, for the explosion protection standpoint, allowed.
The electrical apparatus may be used in zone 0 in accordance with the category. The associated apparatus are installed in the safe area, only the intrinsically safe electric circuits are installed in the potentially explosive area in accordance with the category.
Basically it is possible to apply further protection measures. So that the associated apparatus can be installed in zone 2 or even in zone 1.

Design of intrinsically safe electric circuits

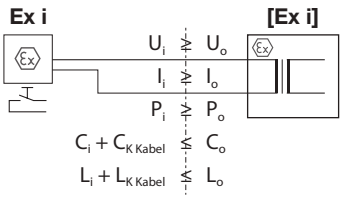

Design of intrinsically safe electric circuits (typical values)

Resistance (back/forth)	0.5 mm²	72 Ohm/km
	0.75 mm²	48 Ohm/km
	1.5 mm²	24 Ohm/km
Capacity		180-200 nF/km
Inductivity		0,8-1 mH/km

Simple electrical apparatus – intrinsic safety

Type	Condition	Example
Passive components	None	Switches, terminal/junction boxes (modular enclosures), resistance, simple semi-conductor components
Energy storage	Values must be observed during calculation	Capacitors, coils
Energy source	≤ 1,5 V ≤ 100 mA ≤ 25 mW	Thermocouple Photocell

в Беларуси Заказ г.Минск viber и тел.+375447584780 email: minsk17@tut.by

Cables for zones 0, 1 and 2
The cables must be laid in such manner that they are protected against mechanical damages, corrosion, chemical and thermal influences. This is an obligatory requirement for the type of protection “intrinsic safety”. The accumulation of potentially explosive atmospheres must be prevented in shafts, pits, ducts, conduits and trenches.
The propagation of flammable gases, vapours, liquids or combustible dusts through shafts, pits, ducts, conduits and trenches must be prevented as well.
If possible, cables and conductors must be laid without interruption in the potentially explosive area. If this is impossible, the connection of cables must be realised in an junction box with the appropriate explosion protection type for that zone. If deviation of this stipulation is required for installation reasons, the requirements of the EN 60079-14 standard must be observed.

Appropriate cables must be selected for intrinsically safe electric circuits. Furthermore, the following conditions apply to intrinsically safe electric circuits, also when they are installed outside of the potentially explosive area:
- Protection against the ingress of external energy.
- Protection against external electric or magnetic fields.

Possible cause: overhead highvoltage line or 1-phase highvoltage lines.
- The conductors of intrinsically safe and non-intrinsically safe electric circuits must not be laid in the same conduit.
- In case of armoured, metal sheathed or shielded cables, intrinsically safe and non-intrinsically safe electric circuits can be laid in the same conduit.

In the control cabinet, the intrinsically safe electric circuits must be clearly marked. The standard prescribes no uniform procedure and only points out that for the marking preferably a light blue colour should be used. However, the neutral conductors of energy cables are usually also marked with a blue colour. In order to avoid confusion, another marking should be used for the intrinsically safe electric circuits in this case. What is important, is a conveniently arranged layout and a spatial separation in the control cabinet.

Conductive shields must only be earthed at places located outside the potentially explosive atmosphere.

Cable	Requirement	
Stationary apparatus	Enclosure	Thermoplastic, duroplast, elastomer or metal insulated with metal enclosure
Mobile, transportable apparatus	External enclosure	Heavy polychloroprene, synthetic elastomer, heavy rubber hose pipe or similar robust design
	Minimum section surface	1.0 mm^2
flexible	Design	– Light rubber hose pipe with/without polychloroprene enclosure – Heavy rubber hose pipe with/without polychloroprene enclosure – Plastic-insulated cable, similar to heavy rubber hose pipe

Selection criteria for cables for the type of protection “intrinsic safety”

Criterion	Condition	Note
Insulated cables	Test voltage ≥ 500 VAC	Cable ground, cable shield and shield ground
Diameter of the individual conductors	≥ 0,1 mm	Also for flexible conductors
Flexible conductors	To be protected against splicing	e.g. by using conductor ferrules
Multi-wire cables	Acceptable	The requirements for the error analysis to EN 60079-14 must be observed
Parameters	(Cc and Lc) or (Cc and Lc/Rc)	In case of doubt: worst case

в Беларуси Заказ г.Минск viber и тел.+375447584780 email: minsk17@tut.by

Mechanical explosion protection

The general requirements can be summarised as follows:

- The equipment must meet all stipulated application requirements (e.g. rough operation, humidity effects, ambient temperature and pressure fluctuations, influence of chemical agents, corrosion, vibrations) (refer to the operating instructions);
- Determination and evaluation of the ignition hazards – Apparatus interior (heating due to failure capable of causing ignition inside the device) – Dust deposits (friction between moving parts) – Evaluation of the surface temperature according to the category
- Documentation of the ignition hazard analysis
- Determine the maximum surface temperature for internal and external surfaces (for category 1 maximum 80 % of T1 ... T6)
- Prevention of mechanically generated sparks by friction, stroke and grinding processes (aluminium, magnesium, titan and zirconium portion in alloys and coatings to be limited in accordance with the category); All conductive parts must be grounded and protected against sparks produced by static electricity; disruptive discharge voltage of non-conductive layers on metallic surfaces smaller than 4 kV; surface resistance smaller than 10^9 Ohm
- Further detailed requirements depending on the equipment category and possible sources of ignition.

The maximum authorised mass portions for the material used for external parts in case an ignition hazard is present due to friction, stroke or friction sparks according to the ignition hazard evaluation, amount to:

- Category M1/M2: not more than 15% aluminium, magnesium, titan and zirconium in total as well as not more than 6% magnesium, titan and zirconium in total
- Category 1: not more than 10 % aluminium, magnesium, titan and zirconium in total as well as not more than 7.5 % magnesium, titan and zirconium in total
- Category 2: not more than 7.5 % magnesium,
- Category 3: no special requirements.

EN 13463-1, clause 5.2 “Evaluation of the ignition hazard” requires an assessment of the ignition hazards as well as a corresponding report in tabular form (example: refer to page 13). The ignition hazard assessment is used for the classification into equipment categories:
“If an equipment has been designed and built in accordance with good engineering practices and the assessment of the ignition hazards ensures that under normal operation, the equipment has no potential source of ignition, the equipment can be classified into the equipment category 3.
If the ignition hazard assessment ensures that the equipment has no potential source of ignition in case of expected or rare malfunctions, it can be classified into the equipment category 2 or 1”.

Section 5.2.7 of the EN 13463-1 includes an assessment report for Group II equipment.

Constructional safety „c“

- Type of protection, in which constructional measures are applied to ensure protection against potential ignition by hot surfaces, sparks and adiabatic compressions generated by moving parts,
- Using proven technical principles,
- The probability of a dangerous failure is very low
- Observations with regard to the lifetime of ball and rolling bearings, distances between moving and fixed parts, rotation speeds higher than 1 m/s, electrostatic problem for belt transmissions.

Marking

- Basic requirement: the field of application of all EX-relevant equipment, protective systems and components must be identified.
- Marking example: ⟨Ex⟩ II 1G c T4

Conditions for safe operation

- The special conditions for a safe application are described in the operating instructions manual of the individual Ex safety switchgear.

в Беларуси Заказ г.Минск viber и тел.+375447584780 email: minsk17@tut.by

Assessment of the ignition hazard for equipment of Group II (EN 13463-1), gas

Potential ignition source (1)			Measures applied to prevent the source becoming effective (2)	Ignition protection used (3)
Normal operation (1b)	Expected malfunction (1b)	Rare malfunction (1c)		

Columns (1b) and (1c) are only required, when the definition of the equipment category of Group II requires that they must be protected in case of specific malfunctions, e.g. for equipment category 2 or 1.
The manufacturer of the equipment performs and documents the risk analysis of the ignition hazard. The user must also perform a risk analysis for the equipment, which was integrated in the machine at the time when it had to meet the requirements of the ATEX 1999/92/EC.

Product designation

	1		2					3			4					
	Ignition hazard															
	a	b	a	b	c	d	e	a	b	c	a	b	c	d	e	f
No.	Potential ignition source		During normal operation	During expected malfunction	During rare malfunction	Not to be observed	Reasons for assessment	Description	Description of the protective measurement (standards, technical rules, experimental results)	Proof (including relevant Ex features listed in column 1)	During normal operation	During expected malfunction	During rare malfunction	Not to be observed	Resulting equipment category in respect of this ignition hazard	Necessary restrictions
1																
2																
3																
															Resulting equipment category including all existing ignition hazards	

в Беларуси Заказ г.Минск viber и тел.+375447584780 email: minsk17@tut.by

The basics of explosion protection

в Беларуси Заказ г.Минск viber и тел.+375447584780 email: minsk17@tut.by

Safety relay modules

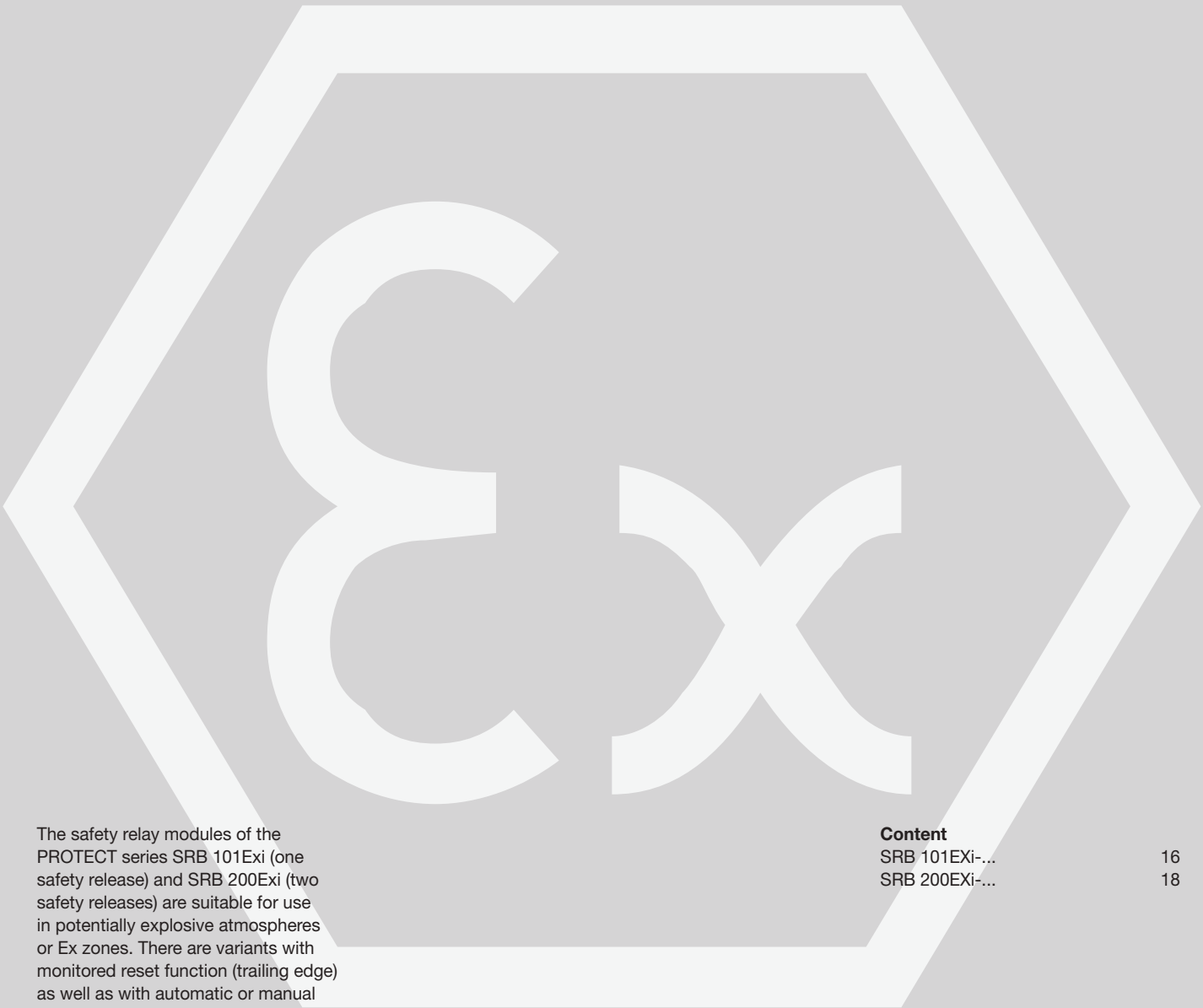

The safety relay modules of the PROTECT series SRB 101Exi (one safety release) and SRB 200Exi (two safety releases) are suitable for use in potentially explosive atmospheres or Ex zones. There are variants with monitored reset function (trailing edge) as well as with automatic or manual reset function. All these versions have a stop 0 safety release and optionally can be supplied with cross-wire short detection.

Content

SRB 101EXi-... 16
SRB 200EXi-... 18

в Беларуси Заказ г.Минск viber и тел.+375447584780 email: minsk17@tut.by

SRB-EXi safety relay module

PROTECT SRB 101EXi-...

- 1 or 2 channel control
- 1 safety contact
- Suitable for signal processing of emergency stop control devices, interlocking equipment, etc.
- 1 additional signalling contact (auxiliary contacts must not be used in safety circuits)
- Trailing edge (version -1R)
- Automatic reset function (version -1A)
- Optionally cross-wire short recognition (through switch)
- Current and voltage limitation of the input circuits (intrinsically safe)
- Green LED indications for relays K1, K2, U_B, U_i and U_{EXi}
- DIN rail mounting to DIN EN 60715:2001
- Thermoplastic enclosure to UL-94-V-0, graphite black RAL 9011
- Certification to DIN EN ISO 13849-1:2007
- Certification to ATEX 94/9/EG
- Electric circuits up to zone 1/21
- Installation in zone 2 possible

Approvals

Technical data

Equipment category, explosion protection type:	Gas: ⟨Ex⟩ II 3 G Ex nAnC IIC T5 (SRB in zone 2); Gas/dust: ⟨Ex⟩ II (2) GD [Ex ib] IIC/[Ex ibD]
Inputs (S11-S12, S21-S22, X1-X2/X3):	[Ex ib] IIC/[Ex ibD]
Temperature class:	T5
Voltage U_o:	33.6 V
Current I_o:	57.0 mA
Capacity P_o:	478.8 mW (linear characteristic)
Maximum safety voltage U_m:	253 VAC
Isolation:	safe separation to EN 60079-11: Amplitude of the voltage 375 V
Rated operating voltage:	24 VDC –15%/+20%, residual ripple max. 10%
Recommended fuse for the operating voltage:	internal fuse F1: T 50 mA/250 V; internal fuse F2: T 100 mA/250 V
Protection class:	enclosure: IP40 Terminals: IP20 Wiring compartment: IP54
Power consumption:	max. 3.0 W
Switching capacity of the enabling paths:	230 V; 3 A ohmic (inductive with suitable protective circuit) AC-15: 230 VAC/3 A DC-13: 24 VDC/3 A
Recommended fuse for the enabling paths:	3.15 A slow blow
Min. switching capacity:	min. 10 V/10 mA
Contact resistance:	max. 100 mΩ in new state
Contact material/contacts:	AgSnO, self-cleaning, positive drive
Switching capacity of the auxiliary contacts (21-22):	24 VDC, 2 A
Recommended fuse for the auxiliary contacts:	2 A slow blow
Current and voltage at S11-S12, S21-S22:	24 VDC, 5 mA
Current limitation at S11-S12, S21-S22:	15 mA
Pull-in delay:	approx. 300 ms (Version -1A) approx. 20 ms (Version -1R)
Drop-out delay:	in case of emergency stop: approx. 20 ms; in case of voltage drop: approx. 20 ms
Bridging in case of voltage drops:	approx. 15 ms
Air clearances and creepage distances:	EN 60664-1:2003 (DIN VDE 0110-1), 4 kV/2; EN 60079-11:2007 (VDE 0170/0171 Part 7)
Max. total line resistance:	30 Ohm
Ambient operating:	–25 °C ... +60 °C
Storage temperature:	–40 °C ... +85 °C
EMV:	EN 61000-6-2:2005
Vibrations:	EN 60068-2-6:1996
Frequency:	10 … 55 Hz
Amplitude:	0.35 mm
Climatic resistance:	EN 60068-2-3:1986
Mechanical life:	10^7 operations
Weight:	230 g
Dimensions:	22.5 x 100 x 121 mm

Ordering details

SRB 101EXi-1①

No.	Option	Description
①	R	Trailing edge
	A	Automatic reset function

Classification

Safety parameters:

Standards:	EN ISO 13849-1, IEC 61508, EN 60947-5-1
PL:	STOP 0: up to e
Category:	STOP 0: up to 4
PFH value:	STOP 0: ≤ 2.00 x 10^{-8}/h
SIL:	STOP 0: up to 3
Mission time:	20 years

The PFH value of 2.00 x 10^{-8}/h applies to the combinations of contact load (current through enabling contacts) and number of switching cycles (n-op/y) mentioned in the table below. At 365 operating days per year and a 24-hours operation, this results in the below-mentioned switching cycle times (t-cycle) for the relay contacts.
Diverging applications upon request.

Contact load	n-op/y	t-cycle
20 %	525,600	1.0 min
40 %	210,240	2.5 min
60 %	75,087	7.0 min
80 %	30,918	17.0 min
100 %	12,223	43.0 min

в Беларуси Заказ г.Минск viber и тел.+375447584780 email: minsk17@tut.by

SRB-EXi safety relay module

Note

- 2-channel control, shown for a guard door monitor with two position switches where one has a positive break contact; with external reset button Ⓡ.
- Relay outputs: 2-channel control, suitable for contact reinforcement or multiplication by means of contactors or relays with positive-drive contacts.
- Ⓗ2 = Feedback circuit
- The control recognizes cable break, cross-wire shorts (switch in position “QS”) and earth leakages in the monitoring circuit.
- The safety function is defined as the opening of release 13-14 when the inputs S11-S12 or S21-S22 are opened.

Wiring diagram

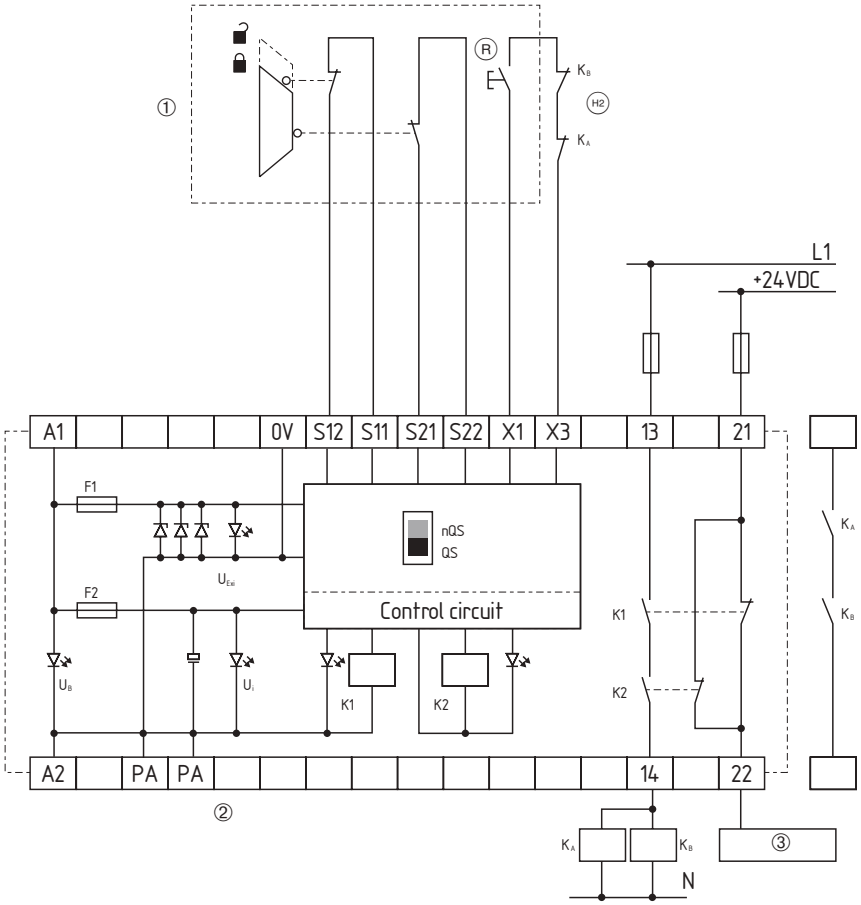

Note

- Cable connections:
  single strand: rigid or flexible (with or without conductor ferrules) 0.25 … 2.5 mm²;
  multi-strand with identical section:
  rigid or flexible (with conductor ferrules without plastic) 0.25 … 2.5 mm²;
  flexible (without or with TWIN conductor ferrules) 0.5 … 1.5 mm²

Legend

① Sensor: Installation in zone 1/21
② SRB Exi: Installation in zone 2
③ Control

в Беларуси Заказ г.Минск viber и тел.+375447584780 email: minsk17@tut.by

SRB-EXi safety relay module

PROTECT SRB 200EXi-...

- 1 or 2 channel control
- 2 safety contacts
- Suitable for signal processing of emergency stop control devices, interlocking equipment, etc.
- Trailing edge (version -1R)
- Automatic reset function (version -1A)
- Optionally cross-wire short recognition (through switch)
- Current and voltage limitation of the input circuits (intrinsically safe)
- Green LED indications for relays K1, K2, U_B, U_i and U_{EXi}
- DIN rail mounting to DIN EN 60715:2001
- Thermoplastic enclosure to UL-94-V-0, graphite black RAL 9011
- Certification to DIN EN ISO 13849-1:2007
- Certification to ATEX 94/9/EG
- Electric circuits up to zone 1/21
- Installation in zone 2 possible

Approvals

Technical data

Equipment category, explosion protection type:	Gas: ⟨Ex⟩ II 3 G Ex nAnC IIC T5 (SRB in zone 2) Gas/dust: ⟨Ex⟩ II (2) GD [Ex ib] IIC/[Ex ibD]
Inputs (S11-S12, S21-S22, X1-X2/X3):	[Ex ib] IIC/[Ex ibD]
Temperature class:	T5
Voltage U_o:	33.6 V
Current I_o:	57.0 mA
Capacity P_o:	478.8 mW (linear characteristic)
Maximum safety voltage U_m:	253 VAC
Isolation:	safe separation to EN 60079-11: Amplitude of the voltage 375 V
Rated operating voltage:	24 VDC –15%/+20%, residual ripple max. 10%
Recommended fuse for the operating voltage:	internal fuse F1: T 50 mA/250 V; internal fuse F2: T 100 mA/250 V
Protection class:	enclosure: IP40 Terminals: IP20 Wiring compartment: IP54
Power consumption:	max. 3.0 W
Switching capacity of the enabling paths:	230 V; 3 A ohmic (inductive with suitable protective circuit) AC-15: 230 VAC/3 A DC-13: 24 VDC/3 A
Recommended fuse for the enabling paths:	3.15 A slow blow
Min. switching capacity:	min. 10 V/10 mA
Contact resistance:	max. 100 mΩ in new state
Contact material/contacts:	AgSnO, self-cleaning, positive drive
Current and voltage at S11-S12, S21-S22:	24 VDC, 5 mA
Current limitation at S11-S12, S21-S22:	15 mA
Pull-in delay:	approx. 300 ms (Version -1A) approx. 20 ms (Version -1R)
Drop-out delay:	in case of emergency stop: approx. 20 ms; in case of voltage drop: approx. 20 ms
Bridging in case of voltage drops:	approx. 15 ms
Air clearances and creepage distances:	EN 60664-1:2003 (DIN VDE 0110-1), 4 kV/2; EN 60079-11:2007 (VDE 0170/0171 Part 7)
Max. total line resistance:	30 Ohm
Ambient operating:	–25 °C ... +60 °C
Storage temperature:	–40 °C ... +85 °C
EMV:	EN 61000-6-2:2005
Vibrations:	EN 60068-2-6:1996
Frequency:	10 … 55 Hz
Amplitude:	0.35 mm
Climatic resistance:	EN 60068-2-3:1986
Mechanical life:	10^7 operations
Weight:	230 g
Dimensions:	22.5 x 100 x 121 mm

Ordering details

SRB 200EXi-1①

No.	Option	Description
①	R	Trailing edge
	A	Automatic reset function

Classification

Safety parameters:

Standards:	EN ISO 13849-1, IEC 61508, EN 60947-5-1
PL:	STOP 0: up to e
Category:	STOP 0: up to 4
PFH value:	STOP 0: ≤ 2.00 x 10^{-8}/h
SIL:	STOP 0: up to 3
Mission time:	20 years

The PFH value of 2.00 x 10^{-8}/h applies to the combinations of contact load (current through enabling contacts) and number of switching cycles (n-op/y) mentioned in the table below. At 365 operating days per year and a 24-hours operation, this results in the below-mentioned switching cycle times (t-cycle) for the relay contacts.
Diverging applications upon request.

Contact load	n-op/y	t-cycle
20 %	525,600	1.0 min
40 %	210,240	2.5 min
60 %	75,087	7.0 min
80 %	30,918	17.0 min
100 %	12,223	43.0 min

в Беларуси Заказ г.Минск viber и тел.+375447584780 email: minsk17@tut.by

SRB-EXi safety relay module

Note

- 2-channel control, shown for a guard door monitor with two position switches where one has a positive break contact; with external reset button Ⓡ.
- Relay outputs: 2-channel control, suitable for contact reinforcement or multiplication by means of contactors or relays with positive-drive contacts.
- Ⓗ2 = Feedback circuit
- The control recognizes cable break, cross-wire shorts (switch in position “QS”) and earth leakages in the monitoring circuit.
- The safety function is defined as the opening of release 13-14 when the inputs S11-S12 or S21-S22 are opened.

Wiring diagram

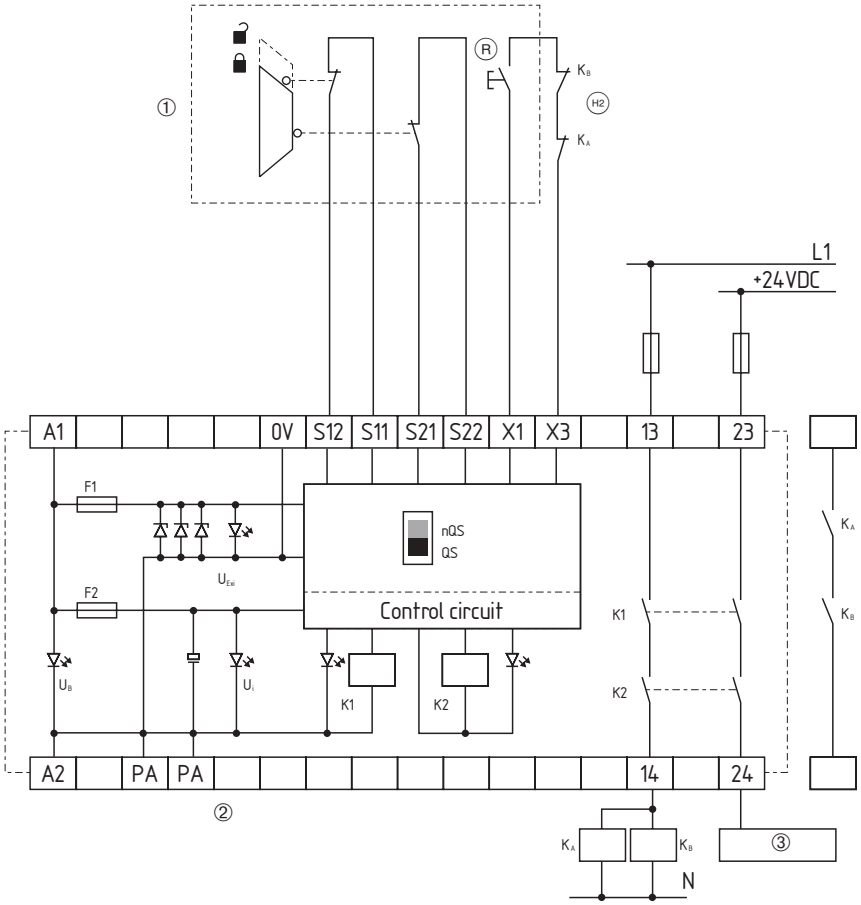

Note

- Cable connections:
  single strand: rigid or flexible (with or without conductor ferrules) 0.25 … 2.5 mm²;
  multi-strand with identical section:
  rigid or flexible (with conductor ferrules without plastic) 0.25 … 2.5 mm²;
  flexible (without or with TWIN conductor ferrules) 0.5 … 1.5 mm²

Legend

① Sensor: Installation in zone 1/21
② SRB Exi: Installation in zone 2
③ Control

в Беларуси Заказ г.Минск viber и тел.+375447584780 email: minsk17@tut.by

Simple electric apparatus, type of protection “intrinsic safety”

For the classification of the protection type "intrinsic safety", an assessment of simple electrical apparatus to EN 60079-11 and EN 61241-11 must be executed.
As simple electrical apparatus within the meaning of intrinsic safety do not represent a potential source of ignition, the Directive 94/9/EC is not applicable. To demonstrate the intrinsic safety to EN 60079-14, a declaration of the manufacturer therefore can be used.
The devices classified as simple electrical apparatus can be used in the Zones 1 /2 and 21 / 22.
On the basis of a valid declaration of the manufacturer with an assessment as simple electrical apparatus, the following devices can be used:

Series	Switch	Page
Safety switch	EX-AZ 16-…-3D	22
	EX-AZ 335-…-3D	25
	EX-AZ 355-…-3D	26
	EX-AZ 415-…-3D	28
	EX-AZ 3350-…-3D	30
Position switches	EX-Z/T 235-...-3D	44
	EX-Z/T 335-...-3D	54
Safety sensors	EX-BNS 33-...-3G/D, however without LED	94
	EX-BNS 120-...-3G/D, however without LED	96
	EX-BNS 180-...-3G/D	98
	EX-BNS 303-...-3G/D, however without LED	100
Magnetic reed switches	EX-BN 20-...-3G/D	106
Reset buttons	Ex-RDT	114
	Ex-RDM	114
Emergency stop control devices	Ex-RDRZ45	118

в Беларуси Заказ г.Минск viber и тел.+375447584780 email: minsk17@tut.by

Safety switch with separate actuator

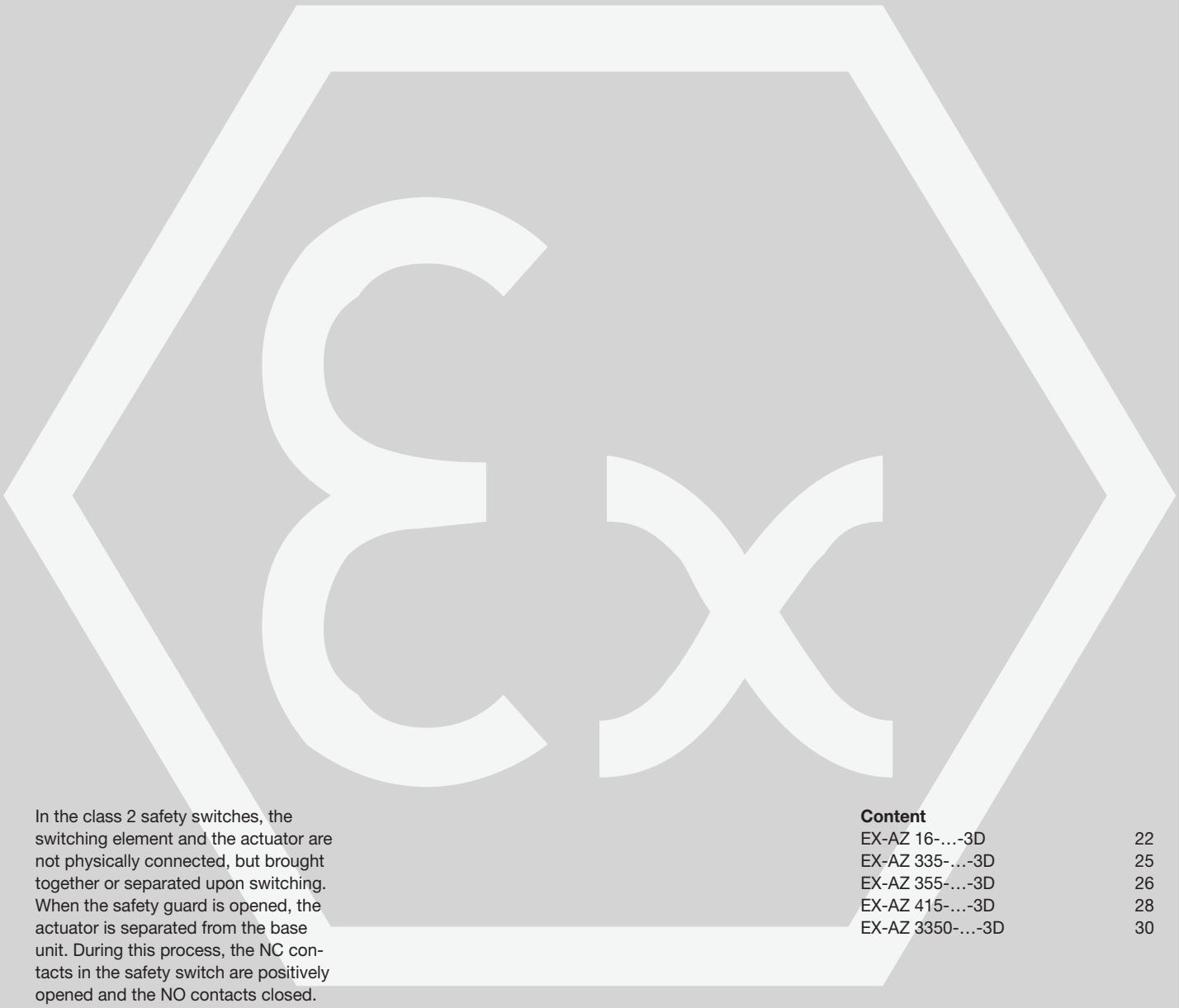

In the class 2 safety switches, the switching element and the actuator are not physically connected, but brought together or separated upon switching. When the safety guard is opened, the actuator is separated from the base unit. During this process, the NC contacts in the safety switch are positively opened and the NO contacts closed.

Content

EX-AZ 16-…-3D	22
EX-AZ 335-…-3D	25
EX-AZ 355-…-3D	26
EX-AZ 415-…-3D	28
EX-AZ 3350-…-3D	30

в Беларуси Заказ г.Минск viber и тел.+375447584780 email: minsk17@tut.by

Safety switch with separate actuator

EX-AZ 16-...-3D

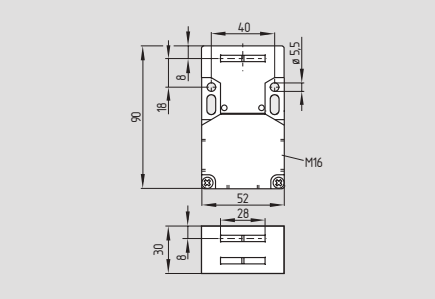

- Ex certified
- Thermoplastic enclosure
- Multiple coding
- Long life
- Double insulated X
- 3 cable entries M16
- Large wiring compartment
- High level of contact reliability with low voltages and currents
- Not sensitive to dirty conditions by virtue of patented roller system
- Slotted holes for adjustment, circular holes for location
- Including Ex-certified screwed cable gland and screw plug

Technical data

Equipment category:	⟨Ex⟩ II 3D
Ex protection:	Ex tD A22 IP67 T90°C X
Standards:	EN 60947-5-1 EN 61241-0 EN 61241-1 BG-GS-ET-15
Enclosure:	glass-fibre reinforced thermo-plastic, self-extinguishing
Max. impact energy:	1 J
Actuating speed:	max. 1 m/s
Actuator:	stainless steel 1.4301
Protection class:	IP67 to EN 60529
Contact material:	Silver
Contact type:	change-over contact with double break, type Zb or 3 NC contacts, with galvanically separated contact bridges
Switching system:	⊖ IEC 60947-5-1 slow action, NC contact with positive break
Connection:	screw terminals
Cable section:	max. 2.5 mm² (incl. conductor ferrules)
Cable entry:	3 x M16
U_{imp}:	6 kV
U_i:	500 V
I_{the}:	2.5 A
Utilisation category:	AC-15 DC-13
I_e/U_e:	2.5 A / 230 VAC 2.5 A / 24 VDC
Max. fuse rating:	4 A gG D-fuse
Positive break travel:	8 mm
Positive break force:	10 N for each
Ambient temperature:	– 20 °C ... + 70 °C
Mechanical life:	> 1 million operations
Latching force:	30 N for ordering suffix R
Cable cross-section	min. Ø 5 mm
of the cable glands:	max. Ø 10 mm
	⟨Ex⟩ II 2D

Contact variants

1 NO / 2 NC

3 NC contacts

Approvals

⟨Ex⟩ CE

Ordering details

EX-AZ16-①ZV②K-③-3D

No.	Option	Description
①	03	3 NC contact
	12	1NO/2NC contacts
②		Ejection force
	R	Latching force 30 N
③	2254	Latching force 5 N
	1762	Front mounting
	1637	Gold-plated contacts

Note

Actuators must be ordered separately.

Dust zone 22

в Беларуси Заказ г.Минск viber и тел.+375447584780 email: minsk17@tut.by

Safety switch with separate actuator

System components

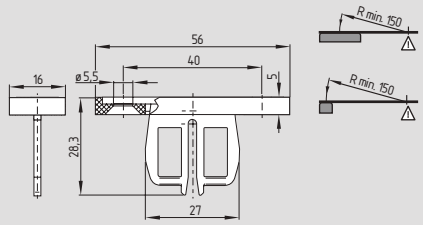

Straight actuator B1

System components

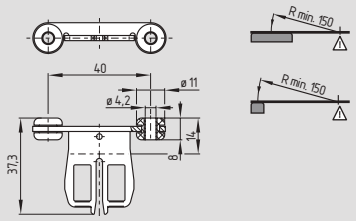

With rubber mounting B1-2245

System components

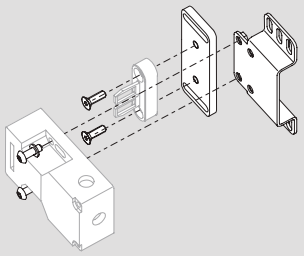

Mounting set MS AZ 15/16

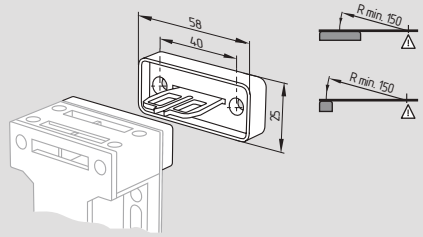

Actuator B1-2024 with slot lip-seal

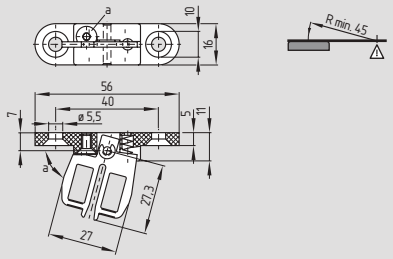

Flexible actuator B2

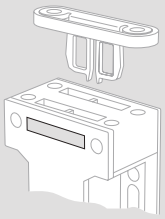

Slot sealing plug AZ 15/16-1476

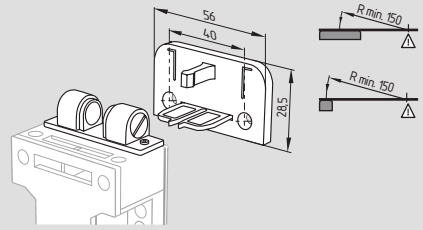

Actuator B1-2053 with ball latch

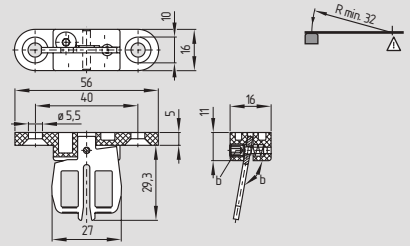

Flexible actuator B3

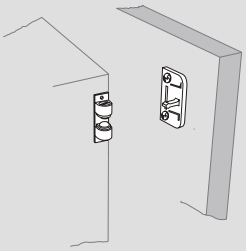

Ball catch 2053-2

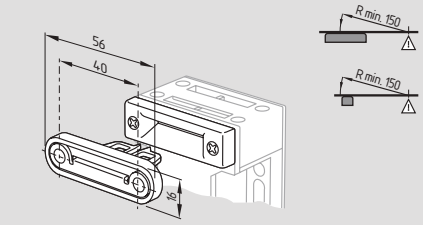

Actuator B1-2177 with centering guide

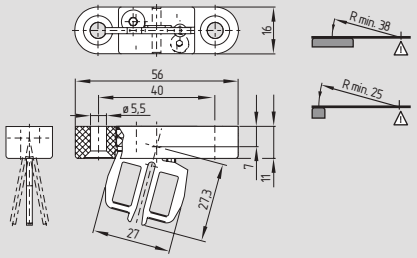

Flexible actuator B6

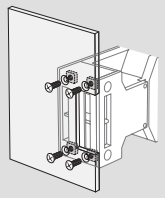

Front mounting -1762

Ordering details

Straight actuator	**AZ 15/16-B1**
with slot lip-seal	**AZ 15/16-B1-2024**
with ball latch	**AZ 15/16-B1-2053**
with centering guide	**AZ 15/16-B1-2177**

Ordering details

Straight actuator	**AZ 15/16-B1-2245**
Flexible actuator	**AZ 15/16-B2**
Flexible actuator	**AZ 15/16-B3**
Flexible actuator	**AZ 15/16-B6**

Ordering details

Mounting set	**MS AZ 15/16**
Slot sealing plug	**AZ 15/16-1476**
Ball catch	**-2053-2**
Front mounting with M5 nuts	**-1762**

в Беларуси Заказ г.Минск viber и тел.+375447584780 email: minsk17@tut.by

Safety switch with separate actuator

System components

Tamperproof screws

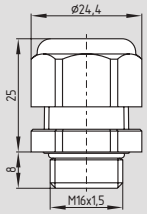

EX-certified screwed cable gland

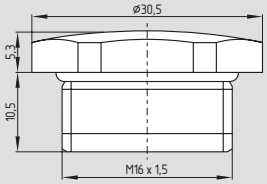

EX-certified screw plug

Dust zone 22

Ordering details

Tamperproof screws	
M5 x 12	**101135338**
M5 x 16	**101135339**
M5 x 20	**101135340**
(Quantity 2 pcs)	
EX-certified screwed cable gland	**EX-KLE-M16x1.5**
EX-certified screw plug	**EX-VS-M16x1.5**

в Беларуси Заказ г.Минск viber и тел.+375447584780 email: minsk17@tut.by

Safety switch with separate actuator

EX-AZ 335-...-3D

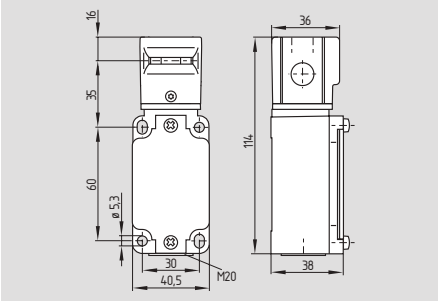

- Ex certified
- Metal enclosure
- 3 contacts
- Long life
- High level of contact reliability with low voltages and currents
- Mounting details to EN 50041
- Actuator heads can be repositioned in steps 4 x 90°
- Can be mounted on a flat surface
- Slotted holes for adjustment, circular holes for location
- 1 Cable entry M20
- Including Ex-certified screwed cable gland

Technical data

Equipment category:	⟨Ex⟩ II 3D
Ex protection:	Ex tD A22 IP67 T90°C X
Standards:	EN 60947-5-1 EN 61241-0 EN 61241-1 BG-GS-ET-15
Enclosure:	light-alloy diecast, paint finish
Actuator:	stainless steel 1.4301
Max. impact energy:	4 J
Actuating speed:	max. 1 m/s
Protection class:	IP67 to EN 60529
Contact material:	Silver
Contact type:	change-over with double break Zb, or 3 NC contacts, galvanically separated contact bridges
Switching system:	⊖ IEC 60947-5-1 slow action, NC contact with positive break
Connection:	screw terminals
Cable section:	max. 2.5 mm², min. 0.75 mm² (incl. conductor ferrules)
Cable entry:	M20
U_{imp}:	4 kV
U_i:	250 V
I_{the}:	10 A
Utilisation category:	AC-15, DC-13
I_e/U_e:	4 A / 230 VAC 4 A / 24 VDC
Max. fuse rating:	6 A gG D-fuse
Positive break travel:	10.7 mm
Positive break force:	5 N for each
Ambient temperature:	– 20 °C ... + 60 °C
Mechanical life:	10 million operations
Latching force:	30 N for ordering suffix R
Cable cross-section	min. Ø 7 mm
of the cable glands:	max. Ø 12 mm
	⟨Ex⟩ II 2D

Contact variants

1 NO / 2 NC

3 NC contacts

Approvals

⟨Ex⟩ CE

Ordering details

EX-AZ 335-①-z②k-③-3D

No.	Option	Description
①	03	3 NC contact
	12	1NO/2NC contacts
②		Latching force 5 N
	R	Latching force 30 N
	UE	With overlapping contacts
③	1637	Gold-plated contacts

Note

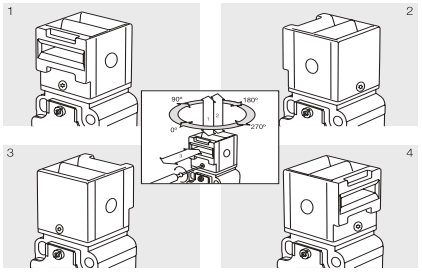

By turning the head in 90° steps, 8 actuating planes are possible. A Torx T10 screwdriver is required for this purpose.

Note

Actuators must be ordered separately.

Dust zone 22

в Беларуси Заказ г.Минск viber и тел.+375447584780 email: minsk17@tut.by

Safety switch with separate actuator

EX-AZ 355-...-3D

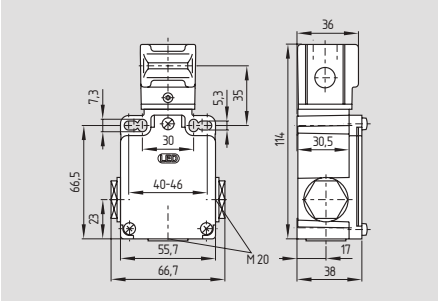

- Ex certified
- Metal enclosure
- 3 contacts
- Long life
- High level of contact reliability with low voltages and currents
- Mounting details to EN 50041
- Actuator heads can be repositioned in steps 4 x 90°
- Can be mounted on a flat surface
- Transverse and longitudinal slotted holes
- 3 cable entries M20
- Including Ex-certified screwed cable gland and screw plug

Technical data

Equipment category:	⟨Ex⟩ II 3D
Ex protection:	Ex tD A22 IP67 T90°C X
Standards:	EN 60947-5-1 EN 61241-0 EN 61241-1 BG-GS-ET-15
Enclosure:	light-alloy diecast, paint finish
Actuator:	stainless steel 1.4301
Max. impact energy:	1 J
Actuating speed:	max. 1 m/s
Protection class:	IP67 to EN 60529
Contact material:	Silver
Contact type:	change-over contact with double break, type Zb or 3 NC contacts, with galvanically separated contact bridges
Switching system:	⊖ IEC 60947-5-1 slow action, NC contact with positive break
Connection:	screw terminals
Cable section:	max. 2.5 mm², min. 0.75 mm² (incl. conductor ferrules)
Cable entry:	3 x M20
U_{imp}:	4 kV
U_i:	250 V
I_{the}:	10 A
Utilisation category:	AC-15, DC-13
I_e/U_e:	4 A / 230 VAC; 4 A / 24 VDC
Max. fuse rating:	6 A gG D-fuse
Positive break travel:	10.7 mm
Positive break force:	5 N for each
Ambient temperature:	– 20 °C ... + 60 °C
Mechanical life:	10 million operations
Latching force:	30 N for ordering suffix R
Cable cross-section of the cable glands:	min. Ø 7 mm max. Ø 12 mm
	⟨Ex⟩ II 2D

Contact variants

1 NO / 2 NC

3 NC contacts

Approvals

⟨Ex⟩ CE

Ordering details

EX-AZ 355-①-Z②K-③-3D

No.	Option	Description
①	03	3 NC contact
	12	1NO/2NC contacts
②		Latching force 5 N
	R	Latching force 30 N
	UE	With overlapping contacts
③	1637	Gold-plated contacts

Note

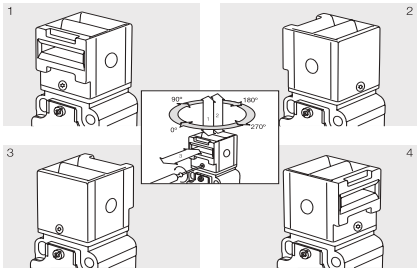

By turning the head in 90° steps, 8 actuating planes are possible. A Torx T10 screwdriver is required for this purpose.

Actuators must be ordered separately.

Dust zone 22

в Беларуси Заказ г.Минск viber и тел.+375447584780 email: minsk17@tut.by

Safety switch with separate actuator

System components

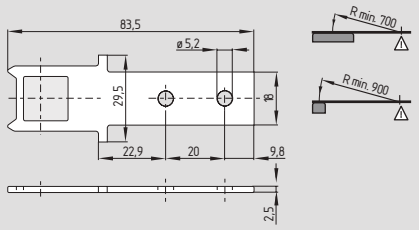

Straight actuator B1

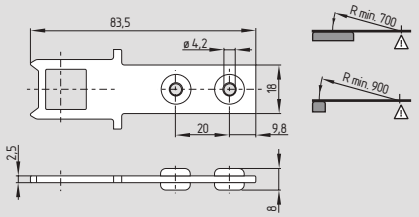

With rubber mountings B1-2245

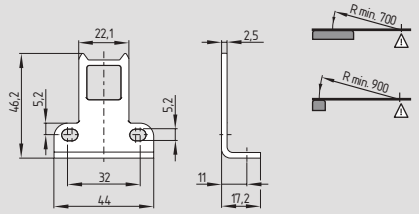

Angled actuator B5

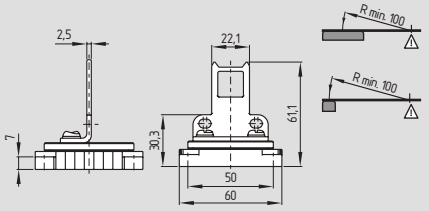

Angled actuator B5-Flex

Ordering details

Straight actuator	**AZ 335/355-B1**
with rubber mounting	**AZ 335/355-B1-2245**
Angled actuator	**AZ 335/355-B5**
Angled actuator	**AZ 335/355-B5-Flex**

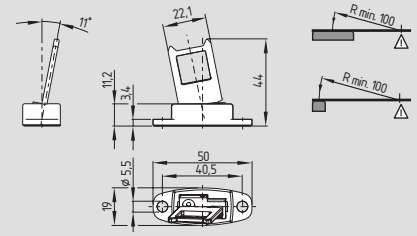

Flexible actuator B6

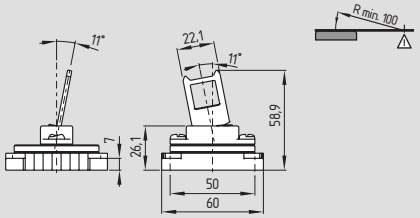

Flexible actuator B6-Flex

Ordering details

Flexible actuator	**AZ 335/355-B6**
Flexible actuator	**AZ 335/355-B6-Flex**

System components

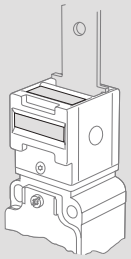

Slot sealing plug AZ 335/355-1990

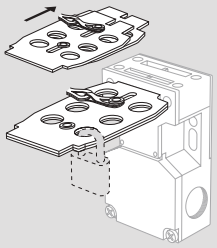

Lockout tag SZ 16/335

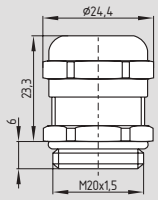

EX-certified screwed cable gland

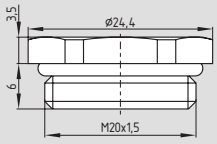

EX-certified screw plug M20

Ordering details

Slot sealing plug	**AZ 335/355-1990**
Lockout tag	**SZ 16/335**
EX-certified screwed cable gland	**EX-KLE-M20x1.5**
EX-certified screw plug	**EX-VS-M20x1.5**

в Беларуси Заказ г.Минск viber и тел.+375447584780 email: minsk17@tut.by

Safety switch with separate actuator

EX-AZ 415-...-3D

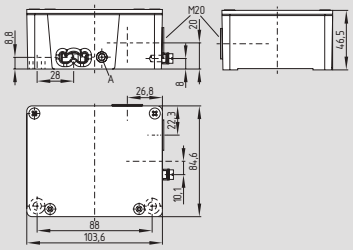

A: setting screw ball latch 30 - 500 N

- Ex certified
- Metal enclosure
- 2 switches with different actuating functions in a single enclosure
- Long life
- High level of contact reliability with low voltages and currents
- Adjustable ball latch to 500 N
- Spring-loaded actuators
- 2 cable entries M20
- Including Ex-certified screwed cable gland and screw plug

Dust zone 22

Technical data

Equipment category:	⟨Ex⟩ II 3D
Ex protection:	Ex tD A22 IP67 T60°C X
Standards:	EN 60947-5-1 EN 61241-0 EN 61241-1 BG-GS-ET-15
Enclosure:	light-alloy diecast, paint finish
Max. impact energy:	4 J
Actuating speed:	max. 1 m/s
Actuator:	zinc-plated brass / aluminium
Protection class:	IP67 to EN 60529
Contact material:	Silver
Contact type:	change-over contact with double break, type Zb or 2 NC contacts, with galvanically separated contact bridges
Switching system:	⊖ IEC 60947-5-1 slow action, NC contact with positive break
Connection:	screw terminals
Cable section:	max. 1.5 mm² min. 0.75 mm² (incl. conductor ferrules)
Cable entry:	2 x M20
U_{imp}:	4 kV
U_i:	250 V
I_{the}:	6 A
Utilisation category:	AC-15, DC-13
I_e/U_e:	4 A / 230 VAC 4 A / 24 VDC
Max. fuse rating:	6 A gG D-fuse
Positive break travel:	3.8 mm
Positive break force:	min. 31 N
Ambient temperature:	– 10 °C ... + 50 °C
Mechanical life:	> 1 million operations
Latching force:	30 - 500 N (adjustable)
Cable cross-section	min. Ø 7 mm
of the cable glands:	max. Ø 12 mm
	⟨Ex⟩ II 2D

Contact variants

11/11 **1 NO contact / 1 NC contact**
1 NO contact / 1 NC contact

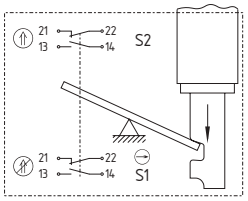

02/11 **2 NC contacts**
1 NO contact / 1 NC contact

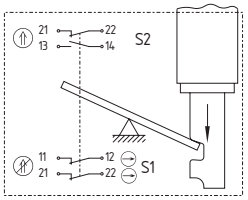

02/20 **2 NO contacts**
2 NC contacts

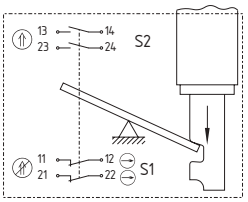

02/02 **2 NC contacts**
2 NC contacts

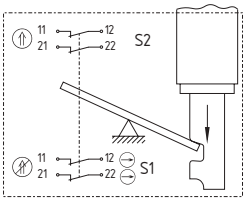

Approvals

⟨Ex⟩ CE

Ordering details

Ex-AZ 415-①ZPK-②-3D

No.	Option	Description
①		**S1 / S2**
	11/11	1NO 1NC / 1NO 1NC contact
	02/11	2NC / 1NO 1NC contact
	02/20	2NC / 2NO contact
	02/02	2NC / 2NC contact
②	1637	Gold-plated contacts

Note

Actuators must be ordered separately.

Note

Contact symbols shown for the closed condition of the guard device.

в Беларуси Заказ г.Минск viber и тел.+375447584780 email: minsk17@tut.by

Safety switch with separate actuator

System components

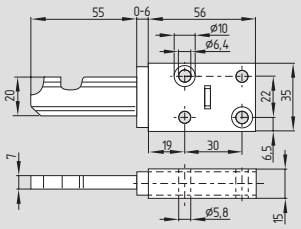

Straight actuator B1

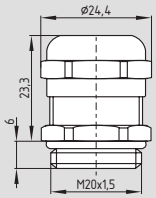

EX-certified screwed cable gland

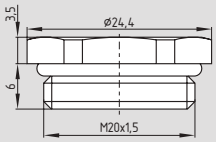

EX-certified screw plug M20

Ordering details

Straight actuator	**AZ/AZM 415-B1**
EX-certified screwed cable gland	**EX-KLE-M20x1.5**
EX-certified screw plug	**EX-VS-M20x1.5**

в Беларуси Заказ г.Минск viber и тел.+375447584780 email: minsk17@tut.by

Safety switch with separate actuator

EX-AZ 3350-...-3D

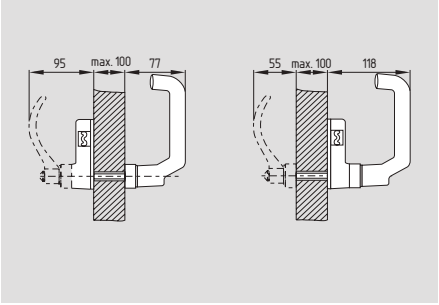

- Ex certified
- Metal enclosure
- Long life
- High level of contact reliability with low voltages and currents
- Shearing force 15,000 N
- Door handle latching
- Lockout tag against unintentional locking available
- Centring device available
- 1 Cable entry M20
- Including Ex-certified screwed cable gland
- Actuating head:

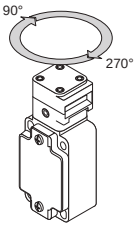

Approvals

Technical data

Equipment category:	⟨Ex⟩ II 3D
Ex protection:	Ex tD A22 IP67 T90°C X
Standards:	EN 60947-5-1 EN 61241-0 EN 61241-1 BG-GS-ET-15
Enclosure:	light-alloy diecast, paint finish
Max. impact energy:	4 J
Actuating speed:	max. 1 m/s
Actuator:	brass, blue chrome-plated
Protection class:	IP67 to EN 60529
Contact material:	Silver
Contact type:	change-over with double break Zb, or 3 NC contacts, galvanically separated contact bridges
Switching system:	⊖ IEC 60947-5-1, BG-GS-ET-15, slow action, NC contact with positive break
Connection:	screw terminals
Cable section:	max. 1.5 mm²
	(incl. conductor ferrules)
Cable entry:	1 x M20
U_{imp}:	4 kV
U_i:	250 V
I_{the}:	10 A
Utilisation category:	AC-15, DC-13
I_e/U_e:	4 A / 230 V 4 A / 24 VDC
Max. fuse rating:	6 A gG D-fuse
Positive break travel:	10.7 mm
Positive break force:	5 N for each
Ambient temperature:	
Mechanical life:	1 million operations
Cable cross-section	min. Ø 7 mm
of the cable glands:	max. Ø 12 mm
	⟨Ex⟩ II 2D

EX-AZ 3350-STS30-...

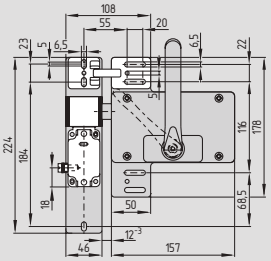

EX-AZ 3350-STS30-02/-04/-05/-07

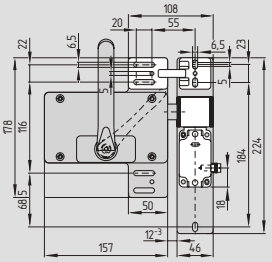

EX-AZ 3350-STS30-01/-03/-06/-08

Ordering details

EX-AZ 3350-①-②-③-3D

No.	Option	Description
①	03-ZK	3 NC contact
	12-ZUEK	1NO/2NC contacts
②	1637	Gold-plated contacts
③	U90	Actuating head 90° rotation Door hinge on the left-hand side
	U270	270° rotation Door hinge on the right-hand side

Note

Included in delivery

- Mounting plate for safety switch
- Actuator incl. mounting plate
- Emergency handle (For variant -05 and -06 incl. mounting plate)

Ordering example

To order, first choose the desired safety switch and then the door handle system:

for example EX-AZ 3350-12-ZUEK-U90 and EX-AZ 3350-STS30-02

Ordering details

The drawings are always shown with a view to the switch.

When the TF. centering device is used, the maximum actuating speed for closing the safety guard is limited to 1 m/s.

в Беларуси Заказ г.Минск viber и тел.+375447584780 email: minsk17@tut.by

Safety switch with separate actuator

System variants

EX-AZ 3350-STS30-01

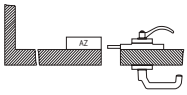

EX-AZ 3350-STS30-01

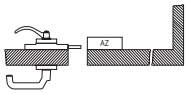

EX-AZ 3350-STS30-03

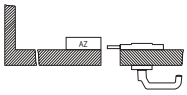

EX-AZ 3350-STS30-04

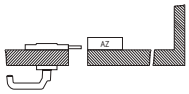

EX-AZ 3350-STS30-05

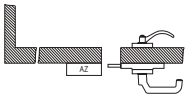

EX-AZ 3350-STS30-06

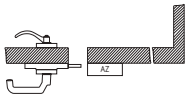

EX-AZ 3350-STS30-07

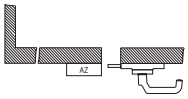

EX-AZ 3350-STS30-08

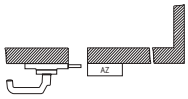

In all images, the guard door opens outwards.

System components

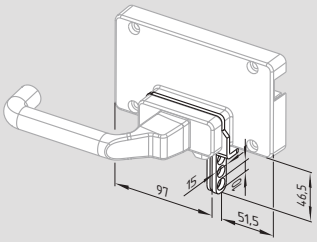

Lockout tag SZ 415-1/-2

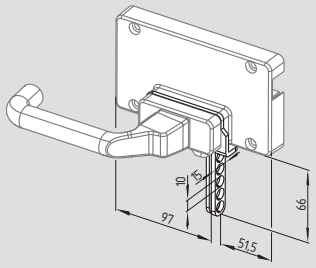

Lockout tag SZ 415-1/-2 -2477

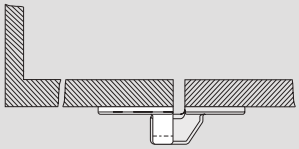

Centring device TF.

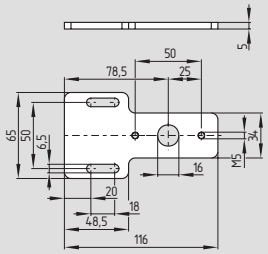

Mounting plate MP TG-01

System components

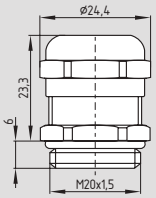

EX-certified screwed cable gland

Ordering details

Mounting inside with emergency handle

Door hinge right	**EX-AZ 3350-STS30-01**
Door hinge left	**EX-AZ 3350-STS30-01**

without emergency handle

Door hinge right	**EX-AZ 3350-STS30-03**
Door hinge left	**EX-AZ 3350-STS30-04**

Mounting outside with emergency handle

Door hinge right	**EX-AZ 3350-STS30-05**
Door hinge left	**EX-AZ 3350-STS30-06**

without emergency handle

Door hinge right	**EX-AZ 3350-STS30-06**
Door hinge left	**EX-AZ 3350-STS30-08**

Ordering details

Lockout tag

for ...STS30-01/-03/-06/-08	**SZ 415-1**
for ...STS30-02/-04/-05/-07	**SZ 415-2**

Lockout tag with 5 bore holes

for ...STS30-01/-03/-06/-08	**SZ 415-1-2177**
for ...STS30-02/-04/-05/-07	**SZ 415-2-2177**

Centering device:

Mounting outside	**TFA-010**
Mounting inside	**TFI-010**

For product information and dimensions, please refer to the Main Catalogue "Safety Technology".

Mounting plate	**MP TG-01**

Ordering details

EX-certified screwed cable gland	**EX-KLE-M20x1.5**

в Беларуси Заказ г.Минск viber и тел.+375447584780 email: minsk17@tut.by

More Details

Detailed technical information at:
www.schmersal.com

в Беларуси Заказ г.Минск viber и тел.+375447584780 email: minsk17@tut.by

Solenoid interlocks

In the solenoid interlocks of the EX-AZM series, the switching element with interlocking device and the actuator are not physically connected, but brought together or separated upon switching. When the safety guard is opened in the unlocked condition, the actuator is separated from the base unit. During this process, the NC contacts are positively opened and the NO contacts closed. Interlocking is carried out by means of a blocking bolt / latching bolt. This latching bolt blocks the actuator so that it cannot be withdrawn from the interlock. The machine control is only enabled when the actuator has been inserted into the interlock and the latching bolt is in the blocking position. This is ensured by the contact monitoring of the latching bolt.

Content

EX-AZM 170-…-3G/D	34
EX-AZM 161-…-3D	36
EX-AZM 415-…-3D	40

в Беларуси Заказ г.Минск viber и тел.+375447584780 email: minsk17@tut.by

Solenoid interlocks

EX-AZM 170-...-3G/D

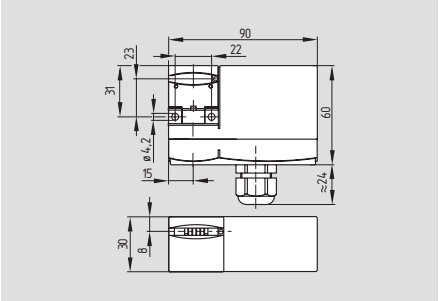

- Ex certified
- Interlock with protection against incorrect locking
- Thermoplastic enclosure
- **cut clamp terminals**
- Compact design
- Manual release
- Long life
- Double insulated ⧈
- High holding force 1000 N
- Latching force 5 N or 30 N
- Power to unlock / Power to lock
- Individual coding available on request
- 1 cable entry M20
- Including Ex-certified screwed cable gland

Approvals

Technical data

Equipment category:	⟨Ex⟩ II 3GD
Ex protection:	Ex nC IIC T5 X Ex tD A22 IP67 T80°C X
Standards:	EN 60947-5-1 EN 61241-0 EN 61241-1 EN 60079-0 EN 60079-15 BG-GS-ET-19
Enclosure:	glass-fibre reinforced thermo-plastic, self-extinguishing
Max. impact energy:	1 J
Actuating speed:	max. 1 m/s
Actuator and locking bolt:	stainless steel 1.4301
Protection class:	IP67 to EN 60529
Contact material:	Silver
Contact type:	change-over contact with double break, type Zb or 2 NC contacts, with galvanically separated contact bridges
Switching system:	⊖ EN 60947-5-1, slow action, positive break NC contact
Connection:	cut clamp terminals
Cable section:	0.75 – 1.0 mm², flexible
U_{imp}:	4 kV
U_i:	250 V
I_{the}:	2 A
Utilisation category:	AC-15, DC-13
I_e/U_e:	2 A / 230 VAC 2 A / 24 VDC
Max. fuse rating:	2 A gG D-fuse
Positive break travel:	11 mm
Positive break force:	6 N for each NC contact fitted
Magnet:	100% ED
U_s:	24 VAC/DC
Power consumption:	max. 10 W
Ambient temperature:	– 15 °C ... + 45 °C
Mechanical life:	> 1 million operations
F_{max}:	1000 N
Latching force:	30 N for ordering suffix R
Cable cross-section of the cable glands:	min. Ø 6.5 mm max. Ø 12 mm
	⟨Ex⟩ II 2D

Contact variants

Power to unlock 1 NO / 1 NC

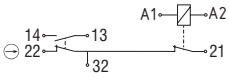

2 NC contacts

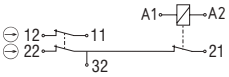

Power to lock 1 NO / 1 NC

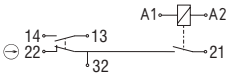

2 NC contacts

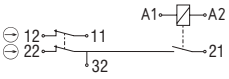

Ordering details

EX-AZM 170-①Z②K③-24VAC/DC-④-3G/D

No.	Option	Description
①	11	1NO/1NC contacts
	02	2 NC contact
②		Latching force 5 N
	R	Latching force 30 N
③		Power to unlock
	A	Power to lock
④		Manual release
	1637	Gold-plated contacts

Note

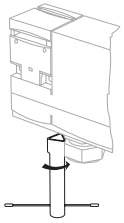

Manual release (left)

- For manual release using M5 triangular key, available as accessory
- Included in standard version

Note

The contact 21-32 is actuated when A1-A2 is energised or de-energised.
At least one magnetic contact with positive break ⊖ must be integrated in the safety circuit.
Circuit diagrams show the de-energised condition with actuator inserted (0 in switch travel diagram).

Interlocks with the power to lock principle may only be used in special cases after a thorough evaluation of the accident risk, since the guarding device can immediately be opened on failure of the electrical power supply or when the main switch is opened.

Actuators must be ordered separately.

в Беларуси Заказ г.Минск viber и тел.+375447584780 email: minsk17@tut.by

Solenoid interlocks

System components

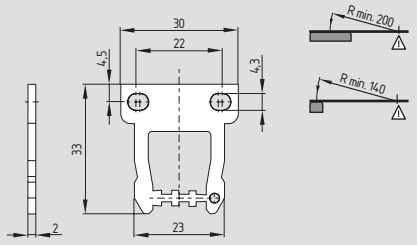

Straight actuator B1

System components

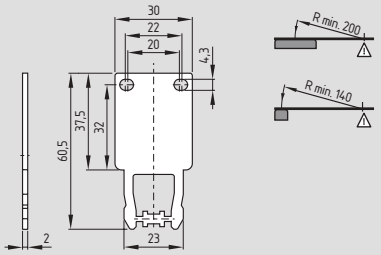

Long straight actuator B11

System components

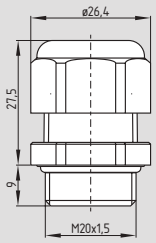

EX-certified screwed cable gland

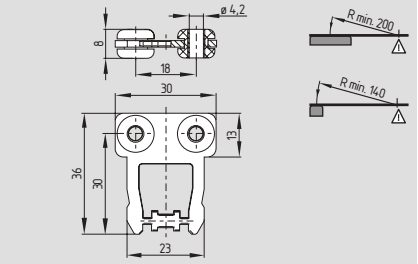

With rubber mounting B1-2245

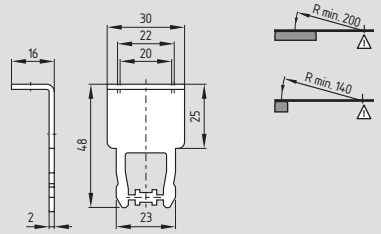

Long angled actuator B15

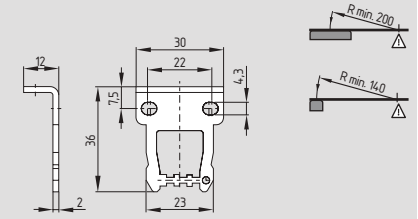

Angled actuator B5

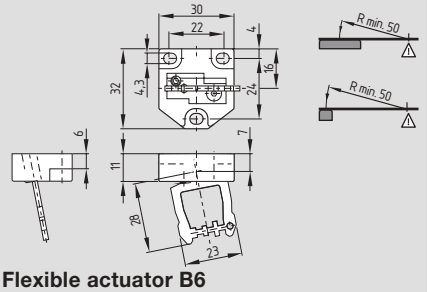

Flexible actuator B6

Ordering details

Straight actuator	**AZ 17/170-B1**
with rubber mountings	**AZ 17/170-B1-2245**
Angled actuator	**AZ 17/170-B5**
Flexible actuator	**AZM 170-B6**

Ordering details

Long straight actuator	**AZ 17/170-B11**
Long angled actuator	**AZ 17/170-B15**

Ordering details

EX-certified screwed cable gland	**EX-KLE-M20x1.5**

в Беларуси Заказ г.Минск viber и тел.+375447584780 email: minsk17@tut.by

Solenoid interlocks

EX-AZM 161-...-3D

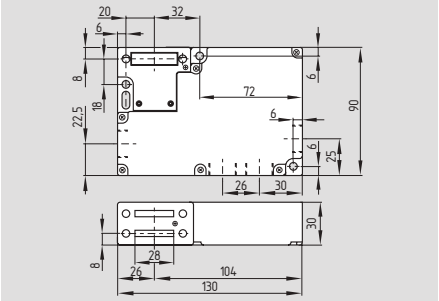

- Ex certified
- Interlock with protection against incorrect locking
- Thermoplastic enclosure
- 6 contacts
- Manual release
- Long life
- Double insulated ⧈
- High holding force 2000 N
- Large wiring compartment
- Power to unlock / Power to lock
- Cage clamps or screw terminals
- 4 cable entries M16
- Including Ex-certified screwed cable gland

Approvals

Technical data

Equipment category:	⟨Ex⟩ II 3D
Ex protection:	Ex tD A22 IP67 T80°C X
Standards:	EN 60947-5-1 EN 61241-0 EN 61241-1 BG-GS-ET-19
Enclosure:	glass-fibre reinforced thermo-plastic, self-extinguishing
Actuator and locking bolt:	stainless steel 1.4301
Protective cover:	Steel painted
Max. impact energy:	1 J 7 J (with AZM 161-ME)
Actuating speed:	max. 1 m/s
Protection class:	IP67
Contact material:	Silver
Contact type:	change-over contact with double break, type Zb, with galvanically separated contact bridges
Switching system:	⊖ EN 60947-5-1, slow action, positive break NC contact
Connection:	screw terminals or cage clamps
Cable section:	max. 1.5 mm² (incl. conductor ferrules)
Cable entry:	4x M16
U_{imp}:	4 kV
U_i:	250 V
I_{the}:	5 A
Utilisation category:	AC-15, DC-13
I_e/U_e:	4 A / 230 VAC 2.5 A / 24 VDC
Max. fuse rating:	6 A gG D-fuse
Positive break travel:	9.5 mm
Positive break force:	10 N for each NC contact fitted
U_s:	24 VAC/DC
Magnet:	100% ED
Power consumption:	max. 10 W
Ambient temperature:	– 15 °C ... + 50 °C
Mechanical life:	> 1 million operations
F_{max}:	2000 N
Latching force:	30 N for ordering suffix R
Cable cross-section of the cable glands:	min. Ø 5 mm max. Ø 10 mm
	⟨Ex⟩ II 2D

Contact variants

2 NO contact / 4 NC contacts (12/12)

Power to unlock

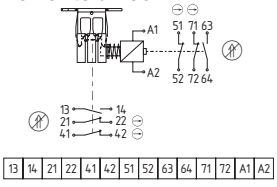

Power to lock

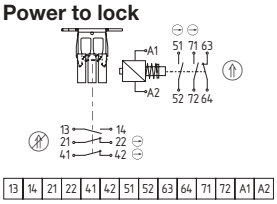

Ordering details

EX-AZM 161 ①-12/12-②K③-024-3D

No.	Option	Description
①	SK	Screw terminals
	CC	Cage clamps
②		Latching force 5 N
	R	Latching force 30 N
③		Power to unlock
	A	Power to lock

Note

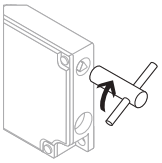

Manual release

- For manual release using M5 triangular key, available as accessory
- For Maintenance purposes only.

Note

At least one magnetic contact with positive break ⊖ must be integrated in the safety circuit.

Contact variants are shown in the de-energised condition with the actuator inserted (0 in switch travel diagram).

Interlocks with the power to lock principle may only be used in special cases after a thorough evaluation of the accident risk, since the guarding device can immediately be opened on failure of the electrical power supply or when the main switch is opened.

Actuators and protective cover must be ordered separately.

в Беларуси Заказ г.Минск viber и тел.+375447584780 email: minsk17@tut.by

Solenoid interlocks

System components

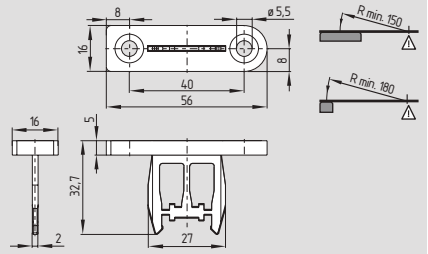

Straight actuator B1

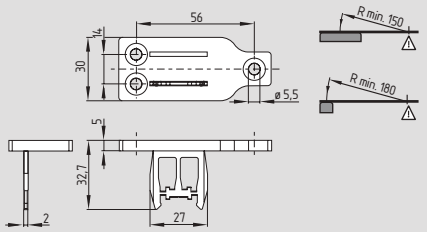

Straight actuator B1E

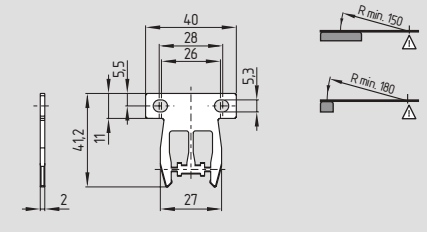

Straight actuator B1F

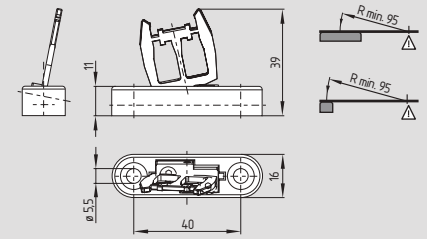

Flexible actuator B6

System components

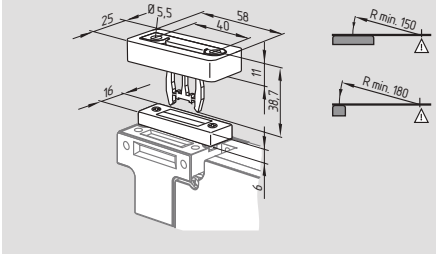

Actuator B1-2024 with slot lip-seal

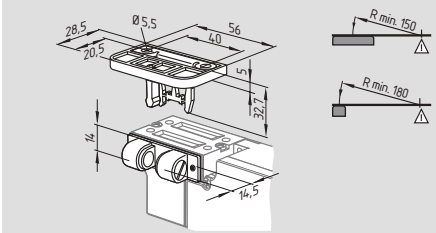

Actuator B1-2053 with ball latch

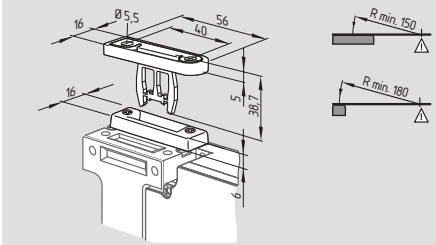

Actuator B1-2177 with centering guide

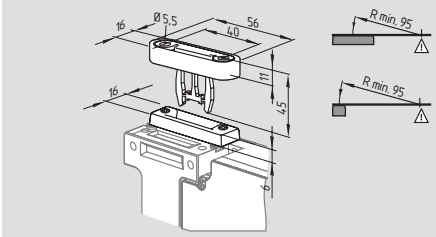

Actuator B6-2177 with centering guide

System components

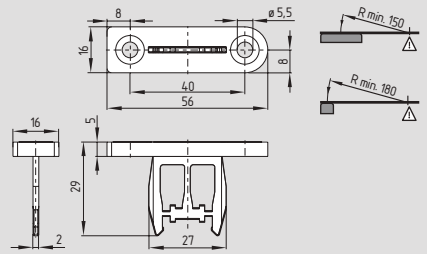

Shortened straight actuator B1S

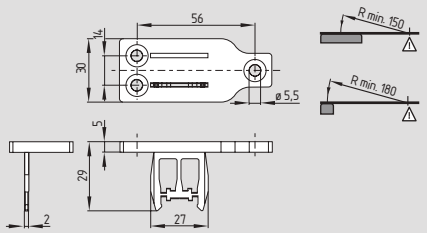

Shortened straight actuator B1ES

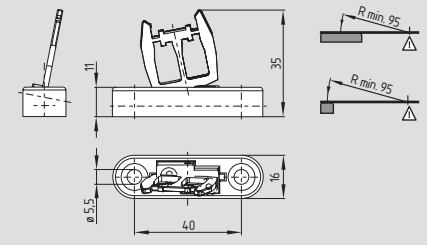

Shortened angled actuator B6S

Ordering details

Straight actuator	**AZM 161-B1**
Straight actuator	**AZM 161-B1E**
Straight actuator	**AZM 161-B1F**
Flexible actuator	**AZM 161-B6**

Ordering details

Straight actuator with slot lip-seal	**AZM 161-B1-2024**
Straight actuator with ball latch	**AZM 161-B1-2053**
Straight actuator with centering guide	**AZM 161-B1-2177**
Flexible actuator with centering guide	**AZM 161-B6-2177**

Ordering details

Shortened straight actuator	**AZM 161-B1S**
Shortened straight actuator	**AZM 161-B1ES**
Shortened angled actuator	**AZM 161-B6S**

в Беларуси Заказ г.Минск viber и тел.+375447584780 email: minsk17@tut.by

Solenoid interlocks

System components

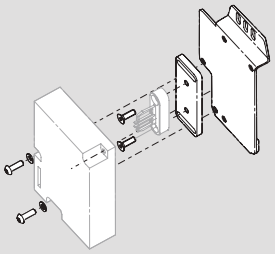

Mounting set MS AZM 161 P

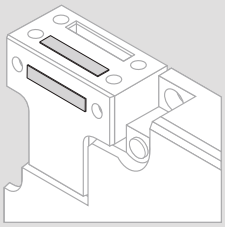

Slot sealing plug AZM 161

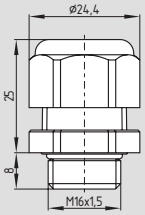

EX-certified screwed cable gland

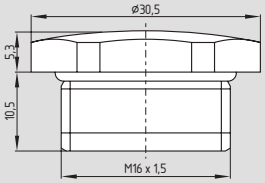

EX-certified screw plug

System components

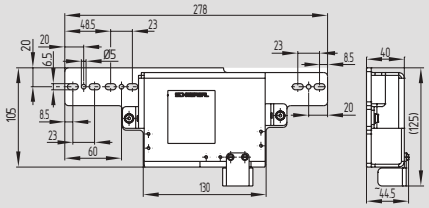

Protective cover AZM 161-ME

Ordering details

Mounting set	**MS AZM 161 P** **MS AZM 161 R/P**
Slot sealing plug AZM 161	**101145379**
Tamperproof screws with unidirectional slots (without drawing)	
M5 x 12	**101135338**
M5 x 16	**101135339**
M5 x 20	**101135340**
(Quantity 2 pcs)	
EX-certified screwed cable gland	**EX-KLE-M16x1.5**
EX-certified screw plug	**EX-VS-M16x1.5**

Ordering details

Protective cover	**AZM 161-ME**

в Беларуси Заказ г.Минск viber и тел.+375447584780 email: minsk17@tut.by

Download now

Data sheets, mounting and wiring instructions, declaration of conformity and other information at:
www.schmersal.com

в Беларуси Заказ г.Минск viber и тел.+375447584780 email: minsk17@tut.by

EX-AZM 415-...-3D

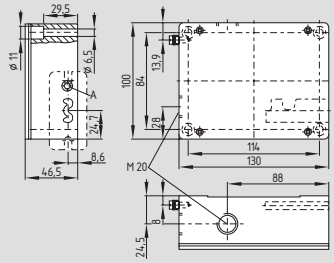

A: setting screw ball latch 30 - 400 N

- Ex certified
- Interlock with protection against incorrect locking
- Metal enclosure
- Two switches in one enclosure
- Problem-free opening of stressed doors by means of bell-crank system
- Robust design
- Long life
- High holding force 3500 N
- Adjustable ball latch to 400 N
- Power to unlock / Power to lock
- 2 cable entries M20
- Including Ex-certified screwed cable gland and screw plug

Approvals

Technical data

Equipment category:	⟨Ex⟩ II 3D
Ex protection:	Ex tD A22 IP67 T90°C X
Standards:	EN 60947-5-1 EN 61241-0 EN 61241-1 BG-GS-ET-19
Enclosure:	light-alloy die-cast, enamel finish
Max. impact energy:	4 J
Actuating speed:	max. 1 m/s
Actuator:	zinc-plated brass/aluminium
Protection class:	IP67 to EN 60529
Contact material:	Silver
Contact type:	change-over contact with double break, type Zb, with galvanically separated contact bridges
Switching system:	⊖ EN 60947-5-1, slow action, positive break NC contact
Connection:	Screw terminals
Cable section:	max. 2.5 mm² (incl. conductor ferrules)
Cable entry:	2 x M20
U_{imp}:	4 kV
U_i:	250 V
I_{the}:	6 A
Utilisation category:	AC-15
I_e/U_e:	4 A / 230 VAC
Max. fuse rating:	6 A gG D-fuse
Positive break travel:	5 mm
Positive break force:	min. 15 N (depending on the setting of the ball latch)
Magnet:	100% ED
U_s:	24 VAC/DC
Power consumption:	max. 10 W
Ambient temperature:	– 10 °C ... + 50 °C
Mechanical life:	> 1 million operations
F_{max}:	3500 N
Latching force:	30 - 400 N (adjustable)
Cable cross-section of the cable glands:	min. Ø 7 mm max. Ø 12 mm
	⟨Ex⟩ II 2D

Contact variants

Power to unlock

11/11 2NC/2NO

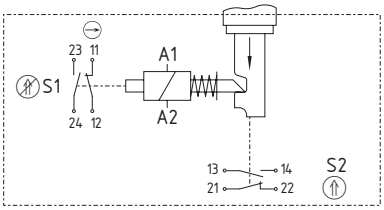

02/11 3NC/1NO

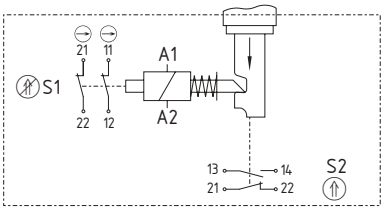

02/02 4NC

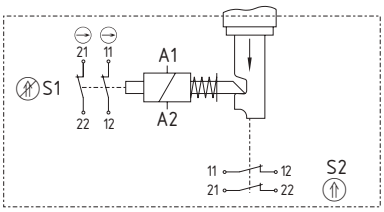

02/20 2NC/2NO

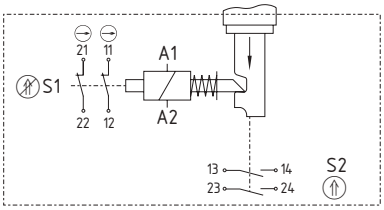

Ordering details

EX-AZM 415-①ZPK② ③-24VAC/DC-3D

No.	Option	Description
①	11/11	2NC/2NO
	02/11	3NC/1NO
	02/20	2NC/2NO
	02/02	4NC
②		Power to unlock
	A	Power to lock
③	1637	Gold-plated contacts

Note

Actuators must be ordered separately.

Note

Contact symbols are shown for the closed condition of the guard device.

The contacts 11-12 and 23-24 are actuated when the solenoid A1-A2 is energised or de-energised.

At least one magnetic contact with positive break ⊖ must be integrated in the safety circuit.

в Беларуси Заказ г.Минск viber и тел.+375447584780 email: minsk17@tut.by

Solenoid interlocks

Contact variants

Power to lock

11/11 2NC/2NO

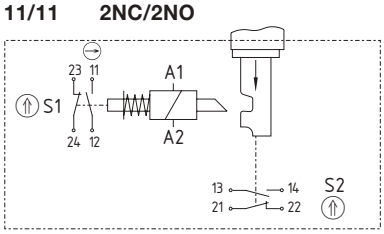

02/11 3NC/1NO

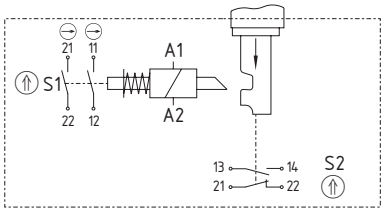

02/02 4NC

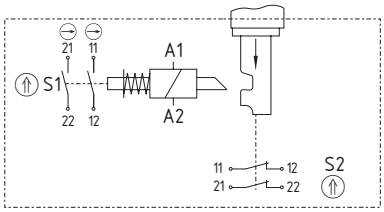

02/20 2NC/2NO

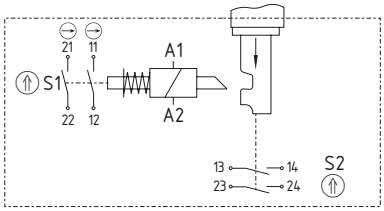

System components

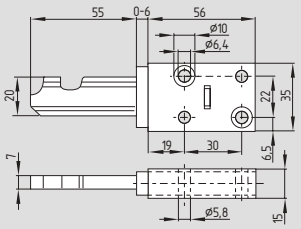

Straight actuator B1

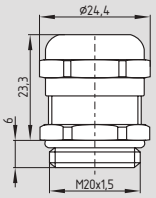

EX-certified screwed cable gland

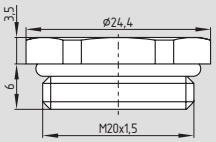

EX-certified screw plug M20

Note

Interlocks with the power to lock principle may only be used in special cases after a thorough evaluation of the accident risk, since the guarding device can immediately be opened on failure of the electrical power supply or when the main switch is opened.

Ordering details

Straight actuator	**AZ/AZM 415-B1**
EX-certified screwed cable gland	**EX-KLE-M20x1.5**
EX-certified screw plug	**EX-VS-M20x1.5**

в Беларуси Заказ г.Минск viber и тел.+375447584780 email: minsk17@tut.by

More Details

Detailed technical information at:
www.schmersal.com

в Беларуси Заказ г.Минск viber и тел.+375447584780 email: minsk17@tut.by

Position switches with safety function

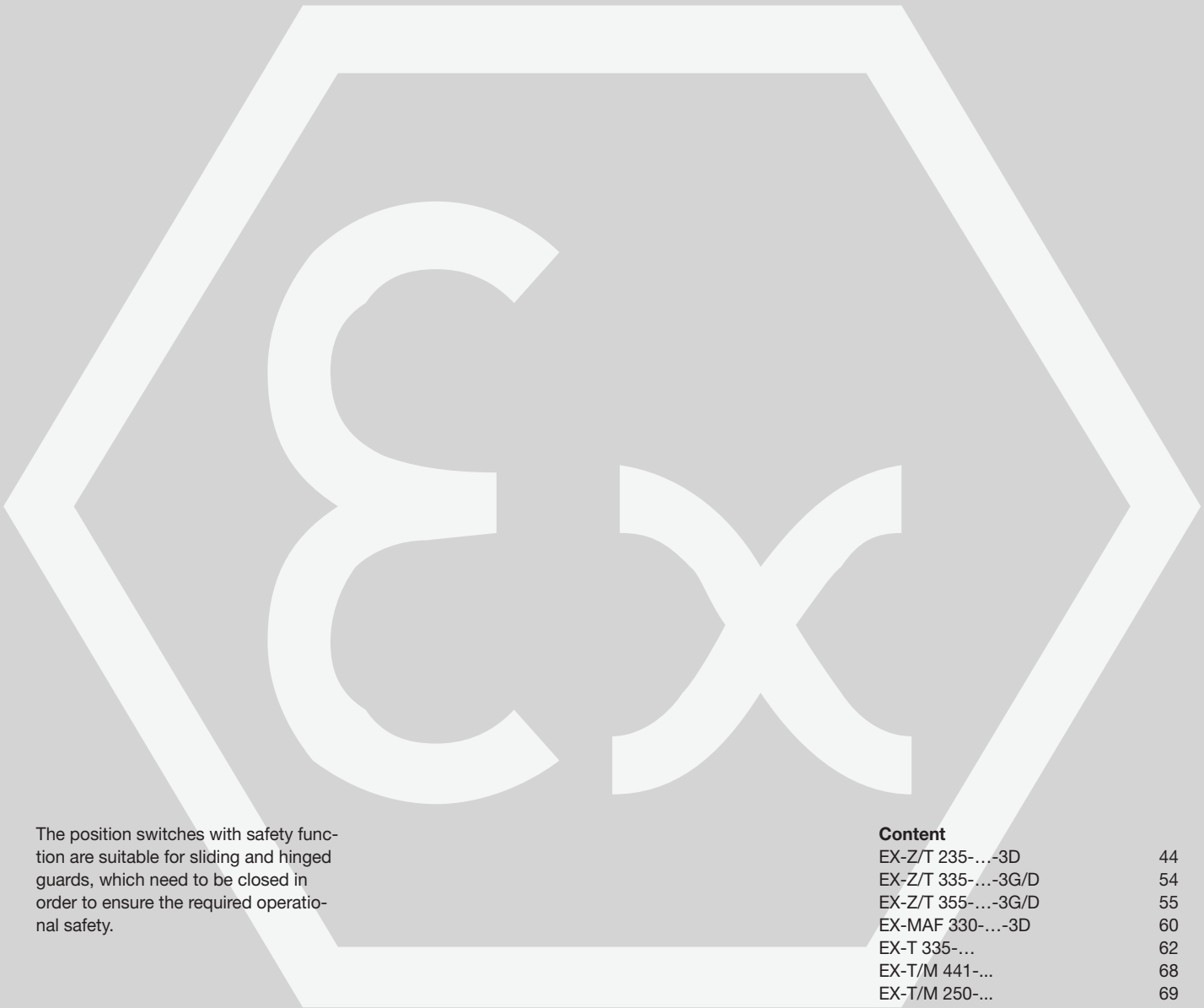

The position switches with safety function are suitable for sliding and hinged guards, which need to be closed in order to ensure the required operational safety.

Content

EX-Z/T 235-…-3D	44
EX-Z/T 335-…-3G/D	54
EX-Z/T 355-…-3G/D	55
EX-MAF 330-…-3D	60
EX-T 335-…	62
EX-T/M 441-...	68
EX-T/M 250-...	69
EX-TS 064-…	70
EX-MS 064-…	71
EX-T. 064-…	73
EX-M. 064 R	74
EX-M. 064 L	75

в Беларуси Заказ г.Минск viber и тел.+375447584780 email: minsk17@tut.by

Position switches with safety function

EX-Z/T 235-...-3D

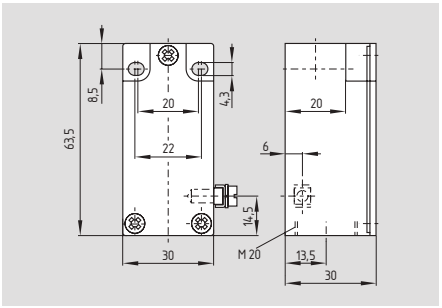

- Ex certified
- Mounting details to EN 50047
- Metal enclosure
- Available with 2 positive break NC contacts
- Snap action with constant contact pressure up to switching point
- Slow action available with overlapping or staggered contacts
- Wiring compartment
- Wide range of alternative actuators
- Actuator heads can be repositioned by 4 x 90°
- Angle of roller lever adjustable in 10° steps
- Good resistance to oil and petroleum spirit
- Metal roller available on request
- 1 cable entry M20
- incl. Ex-certified cable gland

Approvals

Technical data

Equipment category:	⟨Ex⟩ II 3D
Ex protection:	Ex tD A22 IP67 T90°C X
Standards:	EN 60947-5-1 EN 61241-0 EN 61241-1 BG-GS-ET-15
Design:	fixings to EN 50047
Enclosure:	zinc die-cast, enamel finish
Max. impact energy:	1 J
Actuating speed:	max. 1 m/s
Protection class:	IP67 to EN 60529
Contact material:	Silver
Contact type:	change-over contact with double break, type Zb or 2 NC contacts, with galvanically separated contact bridges
Switching system:	⊖ IEC 60947-5-1 slow or snap action, NC contacts with positive break
Connection:	screw terminals
Cable section:	max. 2.5 mm², min. 0.75 mm² (including conductor ferrules)
Cable entry:	M20
U_{imp}:	6 kV
U_i:	500 V
I_{the}:	6 A
Utilisation category:	AC-15, DC-13
I_e/U_e:	4 A / 230 VAC 1 A / 24 VDC
Max. fuse rating:	6 A gG D-fuse
Ambient temperature:	– 20 °C ... + 60 °C
Mechanical life:	20 million operations
Switching frequency:	max. 5000/h
Bounce duration:	Snap action: < 3 ms; Slow action: in accordance with the actuating speed
Switchover time:	Snap action: > 5.5 ms; Slow action: in accordance with the actuating speed
Cable cross-section of the cable glands:	min. Ø 7 mm max. Ø 12 mm
	⟨Ex⟩ II 2D

System components

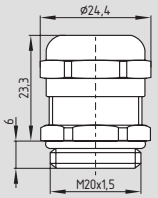

EX-certified screwed cable gland

Ordering details

EX-①② 235-③Z④-⑤-⑥-⑦-3D

No.	Option	Description
①	Z	Snap action ⊖
	T	Slow action ⊖
②	For the appropriate actuator: see page 47	
③	02	2 NC contacts
	11	1 NO contact / 1 NC contact
	20	2 NO contacts
④	H	Slow action with staggered contacts
	UE	with overlapping contacts
⑤	1297	Enclosure with transverse slotted holes
⑥	2138	Roller lever 7H for safety duties
⑦	1637	Gold-plated contacts

Ordering details

* Switches with 2 NO contacts are **only** suitable for positioning tasks!

Ordering details

EX-certified screwed cable gland	**EX-KLE-M20x1.5**

в Беларуси Заказ г.Минск viber и тел.+375447584780 email: minsk17@tut.by

Position switches with safety function

Plunger S

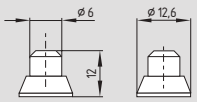

- Actuator type B to EN 50047
- Actuating force: Min. 9 N
- Positive break force: 19 N
- Actuating speed with actuating angle 0° to switch axis
  Snap action: Min. 10 mm/min, max. 1 m/s
  Slow action: Min. 60 mm/min, max. 1 m/s

Contact variants

Contacts/ Switch travel	Snap action	Slow action	Slow action with overlapping contacts	Slow action with staggered contacts
1 NO / 1 NC	**EX-ZS 235-11Z-3D** 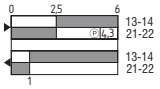	**EX-TS 235-11Z-3D** 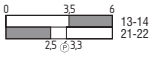	**EX-TS 235-11ZUE-3D**	
2 NC	**EX-ZS 235-02Z-3D** 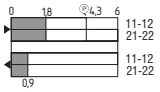	**EX-TS 235-02Z-3D**		**EX-TS 235-02ZH-3D**
2 NO		**EX-TS 235-20Z-3D**		**EX-TS 235-20ZH-3D** 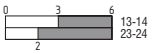

Roller plunger R

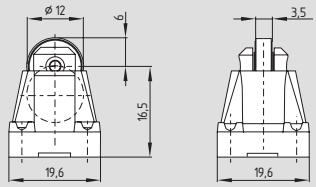

- Actuator type C to EN 50047
- Actuating force: Min. 9 N
- Positive break force: 19 N
- Actuating speed with actuating angle 30° to switch axis
  Snap action: Min. 20 mm/min, max. 1 m/s
  Slow action: Min. 120 mm/min, max. 1 m/s

Contact variants

Contacts/ Switch travel	Snap action	Slow action	Slow action with overlapping contacts	Slow action with staggered contacts
1 NO / 1 NC	**EX-ZR 235-11Z-3D** 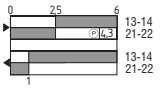	**EX-TR 235-11Z-3D** 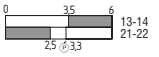	**EX-TR 235-11ZUE-3D** 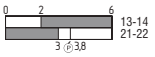	
2 NC	**EX-ZR 235-02Z-3D** 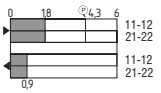	**EX-TR 235-02Z-3D** 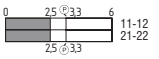		**EX-TR 235-02ZH-3D** 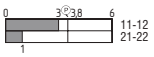
2 NO		**EX-TR 235-20Z-3D** 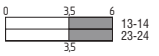		**EX-TR 235-20ZH-3D** 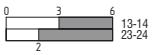

Dust zone 22

в Беларуси Заказ г.Минск viber и тел.+375447584780 email: minsk17@tut.by

Position switches with safety function

Plunger 4S

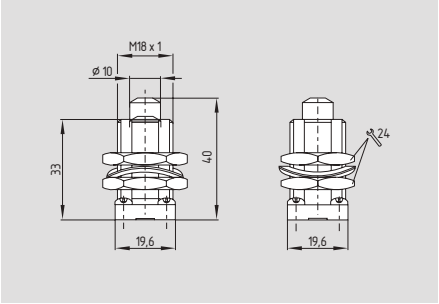

- Actuating force: Min. 9 N
- Positive break force: 19 N
- Actuating speed with actuating angle 0° to switch axis
  Snap action: Min. 10 mm/min, max. 1 m/s
  Slow action: Min. 60 mm/min, max. 1 m/s

Contact variants

Contacts/ Switch travel	Snap action	Slow action	Slow action with overlapping contacts	Slow action with staggered contacts
1 NO / 1 NC	**EX-Z4S 235-11Z-3D**	**EX-T4S 235-11Z-3D**	**EX-T4S 235-11ZUE-3D**	
2 NC	**EX-Z4S 235-02Z-3D**	**EX-T4S 235-02Z-3D**		**EX-T4S 235-02ZH-3D**
2 NO		**EX-T4S 235-20Z-3D**		**EX-T4S 235-20ZH-3D**

Roller plunger 4R

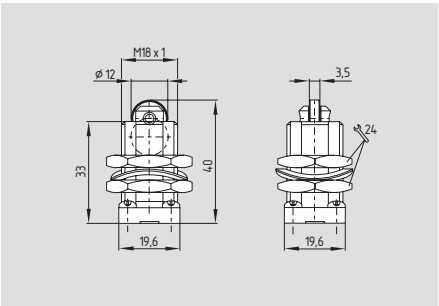

- Actuating force: Min. 9 N
- Positive break force: 19 N
- Actuating speed with actuating angle 30° to switch axis
  Snap action: Min. 20 mm/min, max. 1 m/s
  Slow action: Min. 120 mm/min, max. 1 m/s

Contact variants

Contacts/ Switch travel	Snap action	Slow action	Slow action with overlapping contacts	Slow action with staggered contacts
1 NO / 1 NC	**EX-Z4R 235-11Z-3D**	**EX-T4R 235-11Z-3D**	**EX-T4R 235-11ZUE-3D**	
2 NC	**EX-Z4R 235-02Z-3D**	**EX-T4R 235-02Z-3D**		**EX-T4R 235-02ZH-3D**
2 NO		**EX-T4R 235-20Z-3D**		**EX-T4R 235-20ZH-3D**

Dust zone 22

в Беларуси Заказ г.Минск viber и тел.+375447584780 email: minsk17@tut.by

Position switches with safety function

Offset roller lever 1R

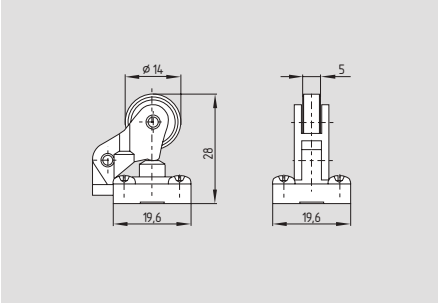

- Actuating force: Min. 9 N
- Positive break force: 19 N
- Actuating speed with actuating angle 30° to switch axis
  Snap action: Min. 27 mm/min, max. 1 m/s
  Slow action: Min. 160 mm/min, max. 1 m/s

Contact variants

Contacts/ Switch travel	Snap action	Slow action	Slow action with overlapping contacts
1 NO / 1 NC	**EX-Z1R 235-11Z-3D** 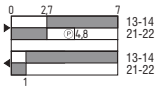	**EX-T1R 235-11Z-3D** 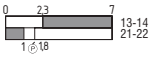	**EX-T1R 235-11ZUE-3D** 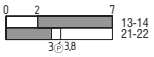
2 NC	**EX-Z1R 235-02z-3D** 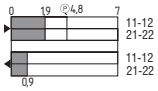	**EX-T1R 235-02Z-3D** 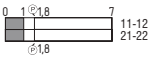	
2 NO		**EX-T1R 235-20Z-3D** 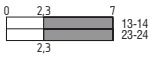	

Offset roller lever K

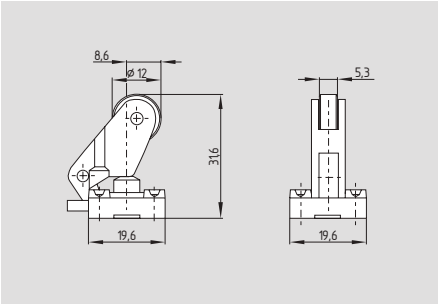

- Actuator type E to EN 50047
- Actuating force: Min. 9 N
- Positive break force: 19 N
- Actuating speed with actuating angle 30° to switch axis
  Snap action: Min. 24 mm/min, max. 1 m/s
  Slow action: Min. 240 mm/min, max. 1 m/s

Contact variants

Contacts/ Switch travel	Snap action	Slow action	Slow action with overlapping contacts	Slow action with staggered contacts
1 NO / 1 NC	**EX-ZK 235-11Z-3D** 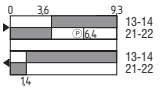	**EX-TK 235-11Z-3D** 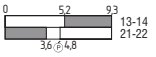	**EX-TK 235-11ZUE-3D** 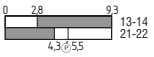	
2 NC	**EX-ZK 235-02Z-3D** 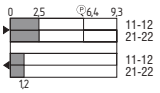	**EX-TK 235-02Z-3D**		**EX-TK 235-02ZH-3D**
2 NO		**EX-TK 235-20Z-3D** 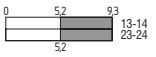		**EX-TK 235-20ZH-3D** 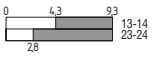

в Беларуси Заказ г.Минск viber и тел.+375447584780 email: minsk17@tut.by

Position switches with safety function

Angle roller lever 3K

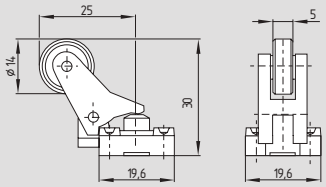

- Actuating force: Min. 9 N
- Positive break force: 19 N
- Actuating speed with actuating angle 30° to switch axis
  Snap action: Min. 27 mm/min, max. 1 m/s
  Slow action: Min. 160 mm/min, max. 1 m/s
- Actuation from bottom parallel to the switch, therefore only suitable for small housings (Z/T 235 and Z/T 236)

Contact variants

Contacts/ Switch travel	Snap action	Slow action	Slow action with overlapping contacts	Slow action with staggered contacts
1 NO / 1 NC	**EX-Z3K 235-11Z-3D** 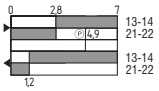	**EX-T3K 235-11Z-3D** 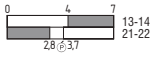	**EX-T3K 235-11ZUE-3D** 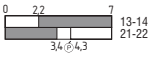	
2 NC	**EX-Z3K 235-02Z-3D** 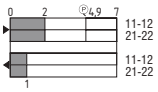	**EX-T3K 235-02Z-3D** 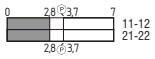		**EX-T3K 235-02ZH-3D**
2 NO		**EX-T3K 235-20Z-3D** 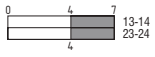		**EX-T3K 235-20ZH-3D** 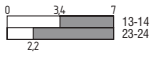

Dust zone 22

Angle roller lever 4K

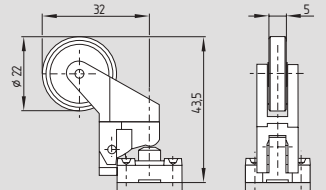

- Actuating force: Min. 6 N
- Positive break force: 16 N
- Actuating speed with actuating angle 30° to switch axis
  Snap action: Min. 44 mm/min, max. 1 m/s
  Slow action: Min. 264 mm/min, max. 1 m/s
- Actuation from bottom parallel to the switch, therefore only suitable for small housings (Z/T 235 and Z/T 236)

Contact variants

Contacts/ Switch travel	Snap action	Slow action	Slow action with overlapping contacts	Slow action with staggered contacts
1 NO / 1 NC	**EX-Z4K 235-11Z-3D** 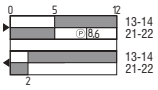	**EX-T4K 235-11Z-3D**	**EX-T4K 235-11ZUE-3D** 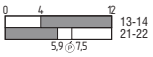	
2 NC	**EX-Z4K 235-02Z-3D** 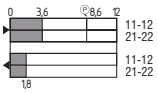	**EX-T4K 235-02Z-3D**		**EX-T4K 235-02ZH-3D**
2 NO		**EX-T4K 235-20Z-3D** 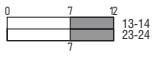		**EX-T4K 235-20ZH-3D** 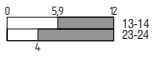

в Беларуси Заказ г.Минск viber и тел.+375447584780 email: minsk17@tut.by

Position switches with safety function

Angle roller lever K4

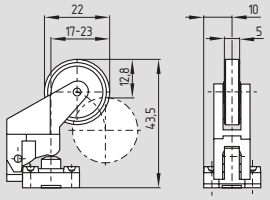

- Actuating force: Min. 6 N
- Positive break force: 16 N
- Actuating speed with actuating angle 30° to switch axis
  Snap action: Min. 56 mm/min, max. 1 m/s
  Slow action: Min. 336 mm/min, max. 1 m/s

Contact variants

Contacts/ Switch travel	Snap action	Slow action	Slow action with overlapping contacts	Slow action with staggered contacts
1 NO / 1 NC	**EX-ZK4 235-11Z-3D** 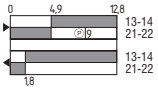	**EX-TK4 235-11Z-3D** 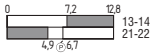	**EX-TK4 235-11ZUE-3D** 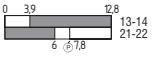	
2 NC	**EX-ZK4 235-02Z-3D** 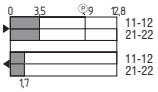	**EX-TK4 235-02Z-3D**		**EX-TK4 235-02ZH-3D** 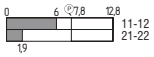
2 NO		**EX-TK4 235-20Z-3D** 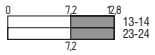		**EX-TK4 235-20ZH-3D** 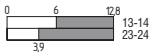

Roller lever 1H

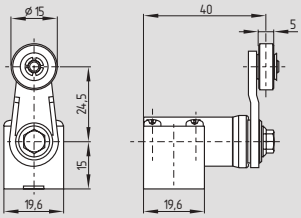

- Plastic lever
- Actuator type A to EN 50047
- Angle of roller lever adjustable in 10° steps
- Actuating torque: Min. 15 Ncm
- Positive break torque: 18.5 Ncm
- Actuating speed with actuating angle 30° to switch axis
  Snap action: Min. 92 mm/min, max. 1 m/s
  Slow action: Min. 492 mm/min, max. 1 m/s
- Actuator head gasket, ordering suffix -Z

Contact variants

Contacts/ Switch travel	Snap action	Slow action	Slow action with overlapping contacts	Slow action with staggered contacts
1 NO / 1 NC	**EX-ZV1H 235-11Z-3D** 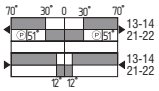	**EX-TV1H 235-11Z-3D** 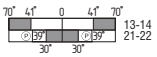	**EX-TV1H 235-11ZUE-3D** 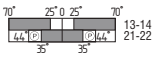	
2 NC	**EX-ZV1H 235-02Z-3D** 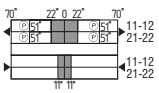	**EX-TV1H 235-02Z-3D** 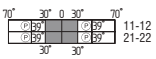		**EX-TV1H 235-02ZH-3D** 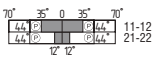
2 NO		**EX-TV1H 235-20Z-3D** 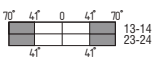		**EX-TV1H 235-20ZH-3D** 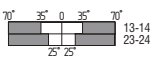

Dust zone 22

в Беларуси Заказ г.Минск viber и тел.+375447584780 email: minsk17@tut.by

Position switches with safety function

Roller lever 7H

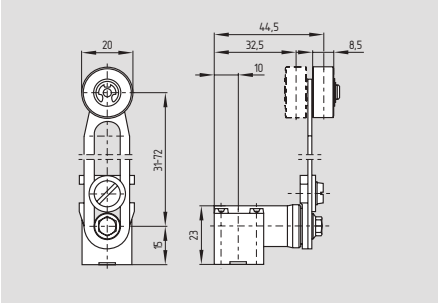

- **only for positioning tasks**
- Angle of roller lever adjustable in 10° steps
- Actuating torque: Min. 15 Ncm
- Actuating speed with actuating angle 30° to switch axis
  Snap action: Min. 240 mm/min, max. 1 m/s
  Slow action: Min. 1440 mm/min, max. 1 m/s
- Actuator head gasket, ordering suffix -Z

Contact variants

Contacts/ Switch travel	Snap action	Slow action	Slow action with overlapping contacts	Slow action with staggered contacts
1 NO / 1 NC	**EX-ZV7H 235-11Z-3D** 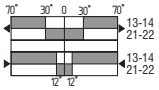	**EX-TV7H 235-11Z-3D** 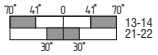	**EX-TV7H 235-11ZUE-3D** 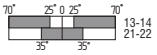	
2 NC	**EX-ZV7H 235-02Z-3D** 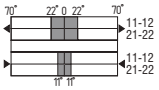	**EX-TV7H 235-02Z-3D** 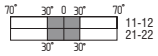		**EX-TV7H 235-02ZH-3D** 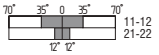
2 NO		**EX-TV7H 235-20Z-3D** 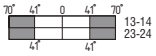		**EX-TV7H 235-20ZH-3D** 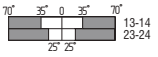

7H-2138

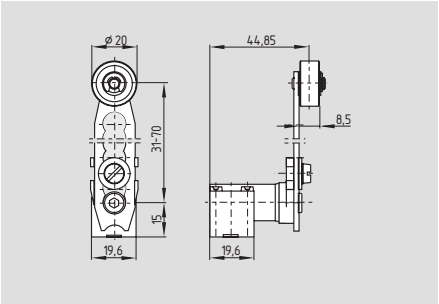

- Angle of roller lever adjustable in 10° steps
- Actuating torque: Min. 15 Ncm
- Positive break torque: 18.5 Ncm
- Actuating speed with actuating angle 30° to switch axis
  Snap action: Min. 240 mm/min, max. 1 m/s
  Slow action: Min. 1440 mm/min, max. 1 m/s
- Actuator head gasket, ordering suffix -Z

Contact variants

Contacts/ Switch travel	Snap action	Slow action	Slow action with overlapping contacts	Slow action with staggered contacts
1 NO / 1 NC	**EX-ZV7H 235-11Z -2138-3D** 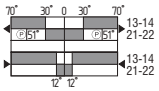	**EX-TV7H 235-11Z -2138-3D** 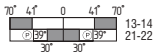	**EX-TV7H 235-11ZUE -2138-3D** 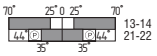	
2 NC	**EX-ZV7H 235-02Z -2138-3D** 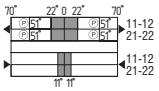	**EX-TV7H 235-02Z -2138-3D** 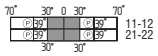		**EX-TV7H 235-02ZH -2138-3D** 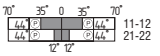
2 NO		**EX-TV7H 235-20Z -2138-3D** 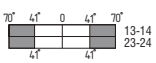		**EX-TV7H 235-20ZH -2138-3D** 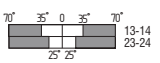

в Беларуси Заказ г.Минск viber и тел.+375447584780 email: minsk17@tut.by

Position switches with safety function

Rod lever 10H

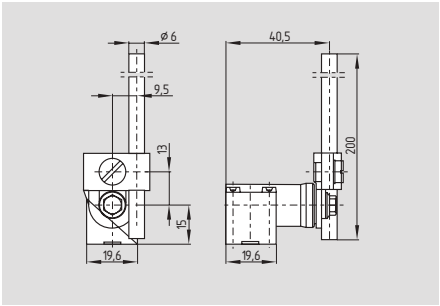

- **only for positioning tasks**
- Angle of roller lever adjustable in 10° steps
- Plastic rod
- Actuating torque: Min. 15 Ncm
- Actuating speed with actuating angle 30° to switch axis
  Snap action: Min. 687 mm/min, max. 1 m/s
  Slow action: Min. 4122 mm/min, max. 1 m/s
- Actuator head gasket, ordering suffix -Z
- Aluminium rod, ordering suffix -1183

Contact variants

Contacts/ Switch travel	Snap action	Slow action	Slow action with overlapping contacts	Slow action with staggered contacts
1 NO / 1 NC	**EX-ZV10H 235-11Z-3D**	**EX-TV10H 235-11Z-3D**	**EX-TV10H 235-11ZUE-3D**	
2 NC	**EX-ZV10H 235-02Z-3D**	**EX-TV10H 235-02Z-3D**		**EX-TV10H 235-02ZH-3D**
2 NO		**EX-TV10H 235-20Z-3D**		**EX-TV10H 235-20ZH-3D**

Roller lever 12H

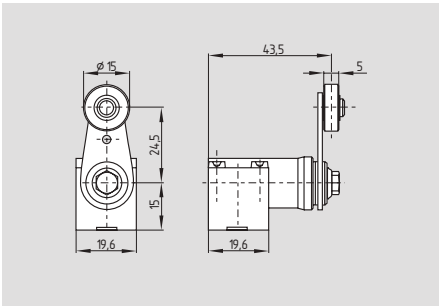

- Metal lever with plastic roller
- Actuator type A to EN 50047
- Angle of roller lever adjustable in 10° steps
- Actuating torque: Min. 15 Ncm
- Positive break torque: 18.5 Ncm
- Actuating speed with actuating angle 30° to switch axis
  Snap action: Min. 687 mm/min, max. 1 m/s
  Slow action: Min. 4122 mm/min, max. 1 m/s
- Actuator head gasket, ordering suffix -Z
- Available with metal roller, ordering suffix –RMS

Contact variants

Contacts/ Switch travel	Snap action	Slow action	Slow action with overlapping contacts	Slow action with staggered contacts
1 NO / 1 NC	**EX-ZV12H 235-11Z-3D**	**EX-TV12H 235-11Z-3D**	**EX-TV12H 235-11ZUE-3D**	
2 NC	**EX-ZV12H 235-02Z-3D**	**EX-TV12H 235-02Z-3D**		**EX-TV12H 235-02ZH-3D**
2 NO		**EX-TV12H 235-20Z-3D**		**EX-TV12H 235-20ZH-3D**

Dust zone 22

в Беларуси Заказ г.Минск viber и тел.+375447584780 email: minsk17@tut.by

Position switches with safety function

Roller lever 14H

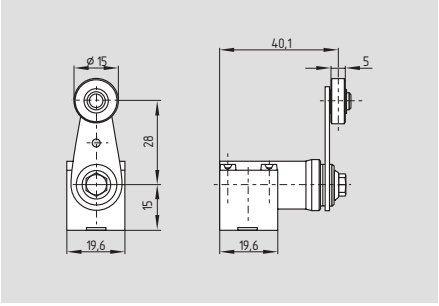

- Metal lever with plastic roller
- Angle of roller lever adjustable in 10° steps
- Actuating torque: Min. 15 Ncm
- Positive break torque: 18.5 Ncm
- Actuating speed with actuating angle 30° to switch axis
  Snap action: Min. 687 mm/min, max. 1 m/s
  Slow action: Min. 4122 mm/min, max. 1 m/s
- Actuator head gasket, ordering suffix -Z
- Available with metal roller, ordering suffix –RMS

Contact variants

Contacts/ Switch travel	Snap action	Slow action	Slow action with overlapping contacts	Slow action with staggered contacts
1 NO / 1 NC	**EX-ZV14H 235-11Z-3D** 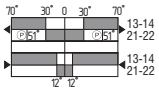	**EX-TV14H 235-11Z-3D** 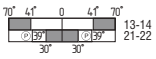	**EX-TV14H 235-11ZUE-3D** 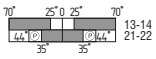	
2 NC	**EX-ZV14H 235-02Z-3D** 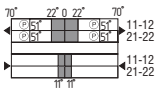	**EX-TV14H 235-02Z-3D** 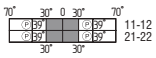		**EX-TV14H 235-02ZH-3D** 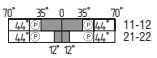
2 NO		**EX-TV14H 235-20Z-3D** 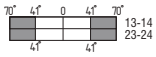		**EX-TV14H 235-20ZH-3D** 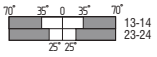

Dust zone 22

в Беларуси Заказ г.Минск viber и тел.+375447584780 email: minsk17@tut.by

More Details

Detailed technical information at:
www.schmersal.net

в Беларуси Заказ г.Минск viber и тел.+375447584780 email: minsk17@tut.by

Position switches with safety function

EX-Z/T 335-...-3G/D

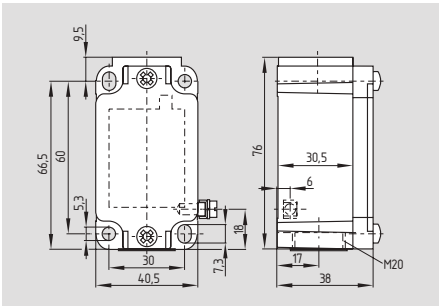

- Ex certified
- Mounting details to EN 50041
- Metal enclosure
- Snap action with constant contact pressure up to switching point
- Slow or snap action available with 2 positive break NC contacts to EN 60947-5-1
- Slow action available with overlapping or staggered contacts
- Wide range of alternative actuators
- Actuator heads can be repositioned by 4 x 90°
- Angle of roller lever adjustable in 10° steps
- Good resistance to oil and petroleum spirit
- 1 cable entry M20
- incl. Ex-certified cable gland

Approvals

Technical data

Equipment category:	⟨Ex⟩ II 3GD
Ex protection:	Ex nC IIC T5 X Ex tD A22 IP67 T90°C X
Standards:	EN 60947-5-1 EN 61241-0 EN 61241-1 EN 60079-0 EN 60079-15 BG-GS-ET-15
Design:	DIN EN 50041
Enclosure:	light-alloy diecast, paint finish
Max. impact energy:	4 J
Actuating speed:	max. 1 m/s
Protection class:	IP67 to EN 60529
Contact material:	Silver
Contact type:	Change-over contact with double break, type Zb or 2 NC contacts, with galvanically separated contact bridges
Switching system:	⊖ EN 60947-5-1, slow action or snap action, positive break NC contact
Connection:	screw terminals
Cable section:	max. 2.5 mm² (including conductor ferrules)
Cable entry:	M20
U_{imp}:	6 kV -03Z, -12Z: 4kV
U_i:	500 V -03Z, -12Z: 250 V
I_{the}:	10 A
Utilisation category:	AC-15, DC-13
I_e/U_e:	4 A / 230 VAC 4 A / 24VDC
Max. fuse rating:	6 A gG D-fuse
Ambient temperature:	– 20 °C ... + 60 °C
Mechanical life:	30 million operations
Switching frequency:	max. 5000/h
Bounce duration:	Snap action: in accordance with actuating speed; Slow action: < 2ms
Switchover time:	Snap action: < 2 ms; Slow action: in accordance with actuating speed
Cable cross-section of the cable glands:	min. Ø 7 mm max. Ø 12 mm
	⟨Ex⟩ II 2D

System components

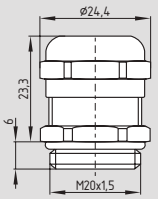

EX-certified screwed cable gland

Ordering details

EX-①② 335-③Z④-⑤-⑥-⑦-3G/D

No.	Option	Description
①	Z	Snap action ⊖
	T	Slow action ⊖
②	For the appropriate actuator: see page 58	
③	11	1 NO contact / 1 NC contact
	02	2 NC contacts
	20	2 NO contacts*
	01/01	1 NC contact to the left/ 1 NC contact to the right
	12	1 NO contact / 2 NC contacts
	03	3 NC contacts
④	H	Slow action with staggered contacts
	UE	with overlapping contacts

No.	Option	Description
⑤	1297	Enclosure with transverse slotted holes
⑥	2138	Roller lever 7H for safety duties
⑦	1637	Gold-plated contacts

* Switches with 2 NO contacts are only suitable for positioning tasks!

Ordering details

EX-certified screwed cable gland	**EX-KLE-M20x1.5**

в Беларуси Заказ г.Минск viber и тел.+375447584780 email: minsk17@tut.by

Position switches with safety function

EX-Z/T 355-...-3G/D

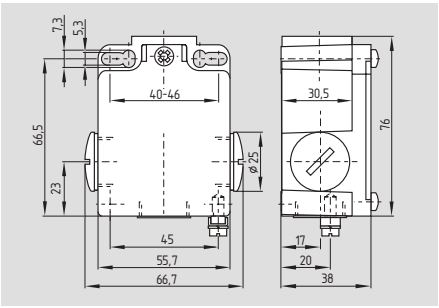

- Ex certified
- Mounting details to EN 50041
- Metal enclosure
- Snap action with constant contact pressure up to switching point
- Slow or snap action available with 2 positive break NC contacts to EN 60947-5-1
- Slow action available with overlapping or staggered contacts
- Wide range of alternative actuators
- Actuator heads can be repositioned by 4 x 90°
- Angle of roller lever adjustable in 10° steps
- Good resistance to oil and petroleum spirit
- 3 cable entries M20
- Including EX-certified screwed cable gland

Approvals

Technical data

Equipment category:	Ⓔx II 3GD
Ex protection:	Ex nC IIC T5 X Ex tD A22 IP67 T90°C X
Standards:	EN 60947-5-1 EN 61241-0 EN 61241-1 EN 60079-0 EN 60079-15 BG-GS-ET-15
Design:	DIN EN 50041
Enclosure:	light-alloy diecast, paint finish
Max. impact energy:	1 J
Actuating speed:	max. 1 m/s
Protection class:	IP67 to EN 60529
Contact material:	Silver
Contact type:	Change-over contact with double break, type Zb or 2 NC contacts, with galvanically separated contact bridges
Switching system:	⊖ EN 60947-5-1, slow action or snap action, positive break NC contact
Connection:	screw terminals
Cable section:	max. 2.5 mm² (including conductor ferrules)
Cable entry:	3 x M 20
U_{imp}:	6 kV -03z, -12z: 4kV
U_i:	500 V -03z, -12z: 250 V
I_{the}:	10 A
Utilisation category:	AC-15, DC-13
I_e/U_e:	4 A / 230 VAC 4 A / 24VDC
Max. fuse rating:	6 A gG D-fuse
Ambient temperature:	– 20 °C ... + 60 °C
Mechanical life:	30 million operations
Switching frequency:	max. 5000/h
Bounce duration:	
Bounce duration:	Snap action: in accordance with actuating speed; Slow action: < 2ms
Switchover time:	Snap action: < 2 ms; Slow action: in accordance with actuating speed
Cable cross-section of the cable glands:	min. Ø 7 mm max. Ø 12 mm
	Ⓔx II 2D

System components

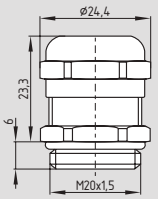

EX-certified screwed cable gland

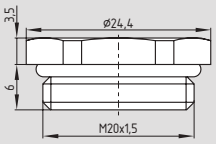

EX-certified screw plug M20

Ordering details

EX-①② 355-③Z④-⑤-⑥-⑦-3G/D

No.	Option	Description
①	Z	Snap action ⊖
	T	Slow action ⊖
②	For the appropriate actuator: see page 58	
③	11	1 NO contact / 1 NC contact
	02	2 NC contacts
	20	2 NO contacts*
	01/01	1 NC contact to the left/ 1 NC contact to the right
	12	1 NO contact / 2 NC contacts
	03	3 NC contacts
④	H	Slow action with staggered contacts
	UE	with overlapping contacts

No.	Option	Description
⑤	1297	Enclosure with transversely slotted mounting holes
⑥	2138	Roller lever 7H for safety duties
⑦	1637	Gold-plated contacts

* Switches with 2 NO contacts are only suitable for positioning tasks!

Ordering details

EX-certified screwed cable gland	**EX-KLE-M20x1.5**
EX-certified screw plug	**EX-VS-M20x1.5**

в Беларуси Заказ г.Минск viber и тел.+375447584780 email: minsk17@tut.by

Position switches with safety function

Plunger S

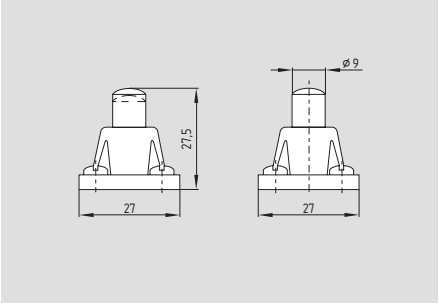

- Actuator type B to EN 50041
- Required actuating force
  Snap action: 12 N
  Slow action: 17 N
- Actuating speed with actuating angle 0° to switch axis: max. 0.5 m/s

Contact variants

Contacts/ Switch travel	Snap action	Slow action	Slow action with overlapping contacts	Slow action with staggered contacts
1 NO / 1 NC	EX-ZS 3..-11Z-3G/D	EX-TS 3..-11Z-3G/D	EX-TS 3..-11ZUE -3G/D	
2 NC	EX-ZS 3..-02Z-3G/D	EX-TS 3..-02Z-3G/D		EX-TS 3..-02ZH-3G/D
2 NO		EX-TS 3..-20Z-3G/D		EX-TS 3..-20ZH-3G/D
1 NO / 2 NC		EX-TS 3..-12Z-3G/D	EX-TS 3..-12ZUE -3G/D	
3 NC		EX-TS 3..-03Z-3G/D		EX-TS 3..-03ZH-3G/D

Roller plunger R

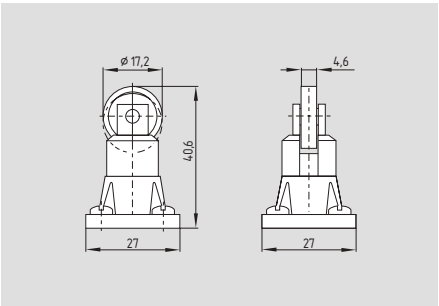

- Actuator type C to EN 50041
- Required actuating force
  Snap action: 12 N
  Slow action: 17 N
- Actuating speed with actuating angle 30° to switch axis: max. 0.5 m/s

Contact variants

Contacts/ Switch travel	Snap action	Slow action	Slow action with overlapping contacts	Slow action with staggered contacts
1 NO / 1 NC	EX-ZR 3..-11Z-3G/D	EX-TR 3..-11Z-3G/D	EX-TR 3..-11ZUE-3G/D	
2 NC	EX-ZR 3..-02Z-3G/D	EX-TR 3..-02Z-3G/D		EX-TR 3..-02ZH-3G/D
2 NO		EX-TR 3..-20Z-3G/D		EX-TR 3..-20ZH-3G/D
1 NO / 2 NC		EX-TR 3..-12Z-3G/D	EX-TR 3..-12ZUE-3G/D	
3 NC		EX-TR 3..-03Z-3G/D		EX-TR 3..-03ZH-3G/D

в Беларуси Заказ г.Минск viber и тел.+375447584780 email: minsk17@tut.by

Position switches with safety function

Roller lever H

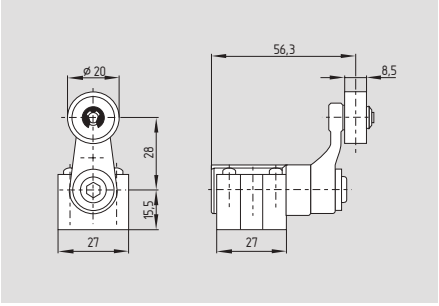

- Actuator type A to EN 50041
- Required actuating torque
  Snap action: 26 Ncm
  Slow action: 31 Ncm
- Actuating speed with actuating angle 30° to switch axis: max. 2.5 m/s
- also available with plastic roller, ordering suffix: 1H
- Available with metal roller, ordering suffix –RMS

On version EX-TVH …-01/01Z positive break only to one side.

Contact variants

Contacts/ Switch travel	Snap action	Slow action	Slow action with overlapping contacts	Slow action with staggered contacts
1 NO / 1 NC	EX-Z4VH 3..-11Z-3G/D	EX-T4VH 3..-11Z-3G/D	EX-T4VH 3..-11Z-3G/D	
2 NC	EX-Z4VH 3..-02Z-3G/D	EX-T4VH 3..-02Z-3G/D		EX-T4VH 3..-02ZH-3G/D
2 NO		EX-T4VH 3..-20Z-3G/D		EX-T4VH 3..-20ZH-3G/D
1 NC left 1 NC right		EX-T4VH3..-01701Z-3G/D		
1 NO / 2 NC		EX-T4VH 3..-12Z-3G/D	EX-T4VH 3..-12ZUE-3G/D	
3 NC		EX-T4VH 3..-03Z-3G/D		EX-T4VH 3..-03Z-3G/D

Rod lever 10H

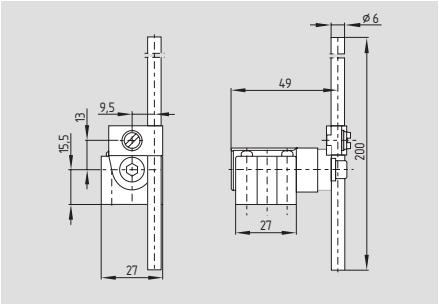

- **only for positioning tasks**
- Actuator type D to EN 50041
- Plastic rod
- Required actuating torque
  Snap action: 26 Ncm
  Slow action: 31 Ncm
- Actuating speed with actuating angle 30° to switch axis: max. 2.5 m/s
- Aluminium rod, ordering suffix -1183

Contact variants

Contacts/ Switch travel	Snap action	Slow action	Slow action with overlapping contacts	Slow action with staggered contacts
1 NO / 1 NC	EX-Z4V10H 3..-11Z-3G/D	EX-T4V10H 3..-11Z-3G/D	EX-T4V10H3..-11ZUE-3G/D	
2 NC	EX-Z4V10H 3..-02Z-3G/D	EX-T4V10H 3..-02Z-3G/D		EX-T4V10H 3..-02ZH-3G/D
2 NO		EX-T4V10H 3..-20Z-3G/D		EX-T4V10H 3..-20ZH-3G/D
1 NC left 1 NC right		EX-TV10H3..-01/01Z-3G/D		
1 NO / 2 NC		EX-T4V10H 3..-12Z-3G/D	EX-T4V10H3..-12ZUE-3G/D	
3 NC		EX-T4V10H 3..-03Z-3G/D		EX-T4V10H 3..-03ZH-3G/D

в Беларуси Заказ г.Минск viber и тел.+375447584780 email: minsk17@tut.by

Position switches with safety function

Roller lever 7H

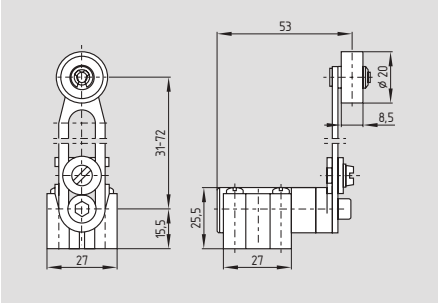

- **only for positioning tasks**
- Required actuating torque
  Snap action: 26 Ncm
  Slow action: 31 Ncm
- Actuating speed with actuating angle 30° to switch axis: max. 2.5 m/s

Contact variants

Contacts/ Switch travel	Snap action	Slow action	Slow action with overlapping contacts	Slow action with staggered contacts
1 NO / 1 NC	EX-Z4V7H 3..-11Z-3G/D	EX-T4V7H 3..-11Z-3G/D	EX-T4V7H 3..-11ZUE-3G/D	
2 NC	EX-Z4V7H 3..-02Z-3G/D	EX-T4V7H 3..-02Z-3G/D		EX-T4V7H 3..-02ZH-3G/D
2 NO		EX-T4V7H 3..-20Z-3G/D		EX-T4V7H 3..-20ZH-3G/D
1 NC left 1 NC right		EX-TV7H 3..-01/01Z-3G/D		
1 NO / 2 NC		EX-T4V7H 3..-12Z-3G/D	EX-T4V7H 3..-12ZUE-3G/D	
3 NC		EX-T4V7H 3..-03Z-3G/D		EX-T4V7H 3..-03ZH-3G/D

7H-2138

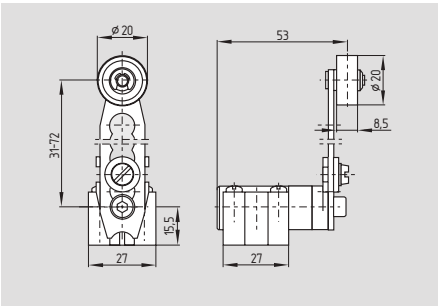

- for safety duties A
- Required actuating torque
  Snap action: 26 Ncm
  Slow action: 31 Ncm
- Actuating speed with actuating angle 30° to switch axis: max. 2.5 m/s

On version TVH ...-01/01Z positive break only to one side.

Contact variants

Contacts/ Switch travel	Snap action	Slow action	Slow action with overlapping contacts	Slow action with staggered contacts
1 NO / 1 NC	EX-Z4V7H 3..-11Z -2138-3G/D	EX-T4V7H 3..-11Z -2138-3G/D	EX-T4V7H 3..-11ZUE- -2138 -3G/D	
2 NC	EX-Z4V7H 3..-02Z -2138-3G/D	EX-T4V7H 3..-02Z -2138-3G/D		EX-T4V7H 3..-02ZH- -2138-3G/D
2 NO		EX-T4V7H 3..-20Z -2138-3G/D		EX-T4V7H 3..-20ZH- -2138-3G/D
1 NC left 1 NC right		EX-TV7H 3..-01/01Z -2138-3G/D		
1 NO / 2 NC		EX-T4V7H 3..-12Z -2138-3G/D	EX-T4V7H 3..-12ZUE -2138-3G/D	
3 NC		EX-T4V7H 3..-03Z -2138-3G/D		EX-T4V7H 3..-03ZH- -2138-3G/D

в Беларуси Заказ г.Минск viber и тел.+375447584780 email: minsk17@tut.by

Position switches with safety function

Offset roller lever 1K

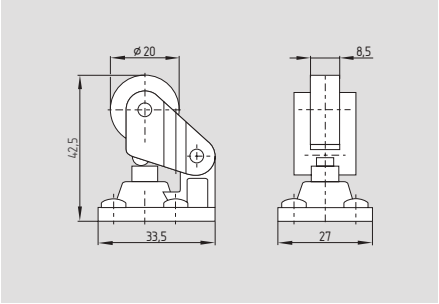

- Required actuating force
  Snap action: 12 N
  Slow action: 17 N
- Actuating speed with actuating angle 30° to switch axis: max. 0.5 m/s

Contact variants

Contacts/ Switch travel	Snap action	Slow action	Slow action with overlapping contacts	Slow action with staggered contacts
1 NO / 1 NC	EX-Z1K 3..-11Z-3G/D 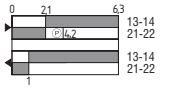	EX-T1K 3..-11Z-3G/D 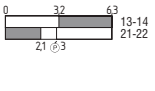	EX-T1K 3..-11ZUE-3G/D 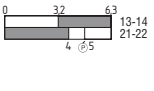	
2 NC	EX-Z1K 3..-02Z-3G/D 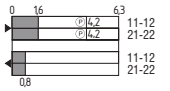	EX-T1K 3..-02Z-3G/D 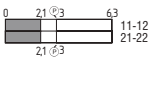		EX-T1K 3..-02ZH-3G/D 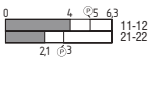
2 NO		EX-T1K 3..-20Z-3G/D 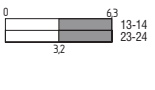		EX-T1K 3..-20ZH-3G/D 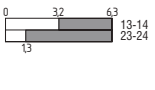
1 NO / 2 NC		EX-T1K 3..-12Z-3G/D 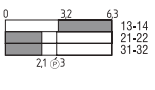	EX-T1K 3..-12ZUE-3G/D 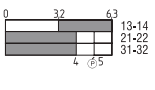	
3 NC		EX-T1K 3..-03Z-3G/D 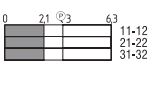		EX-T1K 3..-03ZH-3G/D 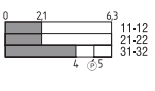

Angle roller lever 3K

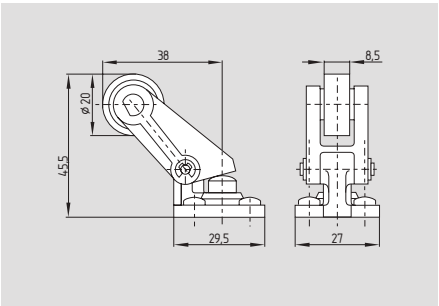

- Required actuating force
  Snap action: 12 N
  Slow action: 17 N
- Actuating speed with actuating angle 30° to switch axis: max. 0.5 m/s
- Actuation parallel to axis of switch from below

Contact variants

Contacts/ Switch travel	Snap action	Slow action	Slow action with overlapping contacts	Slow action with staggered contacts
1 NO / 1 NC	EX-Z3K 3..-11Z-3G/D 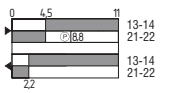	EX-T3K 3..-11Z-3G/D 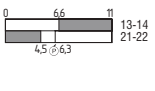	EX-T3K 3..-11ZUE-3G/D 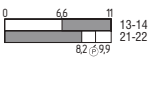	
2 NC	EX-Z3K 3..-02Z-3G/D 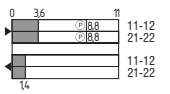	EX-T3K 3..-02Z-3G/D 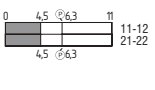		EX-T3K 3..-02ZH-3G/D 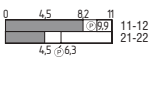
2 NO		EX-T3K 3..-20Z-3G/D 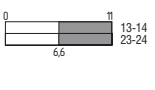		EX-T3K 3..-20ZH-3G/D 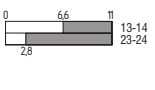
1 NO / 2 NC		EX-T3K 3..-12Z-3G/D 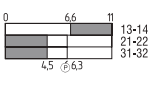	EX-T3K 3..-12ZUE-3G/D 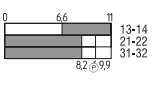	
3 NC		EX-T3K 3..-03Z-3G/D 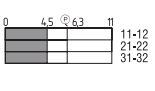		EX-T3K 3..-03ZH-3G/D 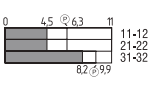

в Беларуси Заказ г.Минск viber и тел.+375447584780 email: minsk17@tut.by

EX-MAF 330-...-3D

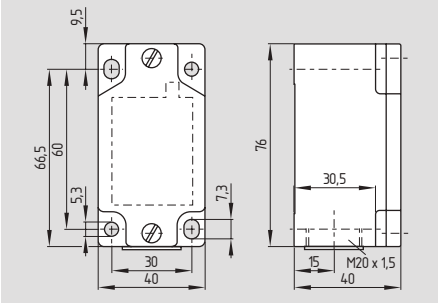

- Ex certified
- Metal enclosure
- Snap action with self-cleaning contacts, change-over contact with double break, silver contacts
- type Zb, with galvanically separated contact bridges
- Suitable for low actuating speeds
- 3 contacts
- Long life
- High level of contact reliability with low voltages and currents
- Mounting details to EN 50041
- Actuator heads can be repositioned in steps 4 x 90°
- Can be mounted on a flat surface
- Slotted holes for adjustment, circular holes for location
- 1 cable entry M20
- Including Ex-certified screwed cable gland
- Actuating speed min. 10 mm/min related to the plunger

Approvals

Technical data

Equipment category:	⟨Ex⟩ II 3D
Ex protection:	Ex tD A22 IP65 T100°C X
Standards:	EN 60947-5-1 EN 61241-0 EN 61241-1 BG-GS-ET-15
Enclosure:	light-alloy diecast, paint finish
Actuator:	stainless steel 1.4301
Max. impact energy:	4 J
Actuating speed:	max. 1 m/s
Protection class:	IP65 to EN 60529
Contact material:	Silver
Contact type:	Change-over contact with double break type Zb, 3 NC contacts with galvanically separated contact bridges
Switching system:	⊖ EN 60947-5-1, slow action, positive break NC contact
Connection:	screw terminals
Cable section:	max. 2.5 mm² min. 0.75 mm² (including conductor ferrules)
Cable entry:	M20
U_{imp}:	4 kV
U_i:	250 V
I_{the}:	10 A
Utilisation category:	AC-15, DC-13
I_e/U_e:	4 A / 230 VAC 4 A / 24 VDC
Max. fuse rating:	6 A gG D-fuse
Positive break travel:	10.7 mm
Positive break force:	each NC contact 5 N
Ambient temperature:	– 15 °C ... + 80 °C
Mechanical life:	10 million operations
Latching force:	30 N for ordering suffix R
Cable cross-section of the cable glands:	min. Ø 7 mm max. Ø 12 mm ⟨Ex⟩ II 2D

System components

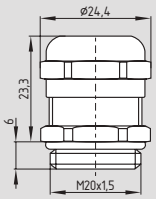

EX-certified screwed cable gland

Ordering details

EX-MAF 330-11Y-①-②

No.	Option	Description
①		without LED
②	AuNi	Gold-nickel alloy contacts

Ordering details

EX-certified screwed cable gland	**EX-KLE-M20x1.5**

Dust zone 22

в Беларуси Заказ г.Минск viber и тел.+375447584780 email: minsk17@tut.by

Position switches

Spring rod lever AF

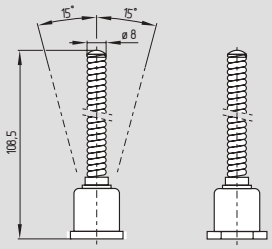

- Required actuating force 9.0 N
- can be deflected in any direction
- Elasticity of the spring allows for deflection above the max. switching angle of 15°

Contact variants

Contacts/ Switch travel	Snap action
1 NO / 1 NC	**MAF 330-11y** 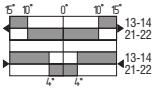

в Беларуси Заказ г.Минск viber и тел.+375447584780 email: minsk17@tut.by

EX-T 335-...

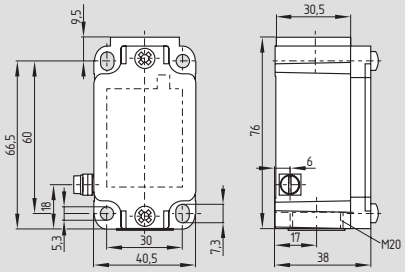

- Ex certified
- Mounting details to EN 50041
- Metal enclosure
- Slow action with 2 positive-break NC contacts to EN 60947-5-1 available
- Slow action available with overlapping contacts
- Wide range of alternative actuators
- Actuator heads can be repositioned by 4 x 90°
- Angle of roller lever adjustable in 10° steps
- Good resistance to oil and petroleum spirit
- 1 cable entry M20
- Including Ex-certified screwed cable gland

Approvals

Technical data

Equipment category:	⟨Ex⟩ II 2GD
Ex protection:	Ex de IIC T6 Ex tD A21 IP65 T80°C
Standards:	EN 60947-5-1 EN 61241-0 EN 61241-1 EN 60079-0 EN 60079-1 BG-GS-ET-15
Design:	DIN EN 50041
Enclosure:	zinc die-cast, paint finish
Max. impact energy:	7 J
Actuating speed:	max. 1 m/s
Protection class:	IP65, IP67 to EN 60529
Contact material:	Silver
Contact type:	Change-over contact with double break, type Zb or 2 NC contacts, with galvanically separated contact bridges
Switching system:	⊖ EN 60947-5-1, slow action, positive break NC contact
Connection:	screw terminals
Cable section:	1 mm² ... 2.5 mm² (including conductor ferrules)
Cable entry:	M20
U_{imp}:	4 kV
U_i:	250 V
I_{the}:	5 A
Utilisation category:	AC-1
Max. fuse rating:	6 A gG D-fuse
Ambient temperature:	
- cable section 2.5 mm²	– 20 °C ... + 55 °C
- cable section 1 mm²	– 20 °C ... + 50 °C
Mechanical life:	> 1 million operations
Switching frequency:	max. 1800/h
Bounce duration:	< 3 ms
Switchover time:	in accordance with actuating speed
Cable cross-section of the cable glands:	min. Ø 7 mm max. Ø 12 mm
	⟨Ex⟩ II 2D

System components

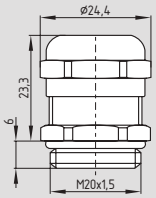

EX-certified screwed cable gland

Ordering details

EX-T① 335-②Y③-④

No.	Option	Description
①		For the appropriate actuator: see page 65
②	11	1 NO contact / 1 NC contact
	02	2 NC contacts
	20	2 NO contacts*
③	UE	with overlapping contacts with staggered contacts
④	2138	Roller lever 7H for safety duties

* Switches with 2 NO contacts are only suitable for positioning tasks!

Ordering details

EX-certified screwed cable gland	**EX-KLE-M20x1.5**

в Беларуси Заказ г.Минск viber и тел.+375447584780 email: minsk17@tut.by

Plunger S

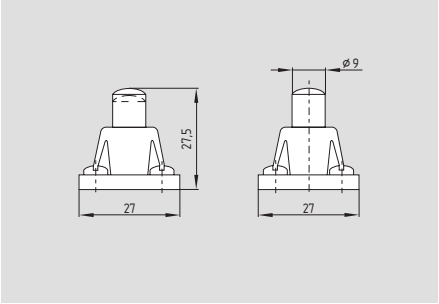

- Actuator type B to EN 50041
- Required actuating force
  Slow action: 17 N
- Actuating speed with actuating angle 0° to switch axis: max. 0.5 m/s

Contact variants

Contacts/ Switch travel	Slow action	Slow action with overlapping contacts
1 NO / 1 NC	**EX-TS 335-11Y** 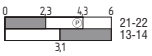	**EX-TS 335-11YUE**
2 NC	**EX-TS 335-02Y** 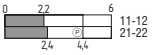	
2 NO	**EX-TS 335-20Y** 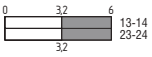	

Roller plunger R

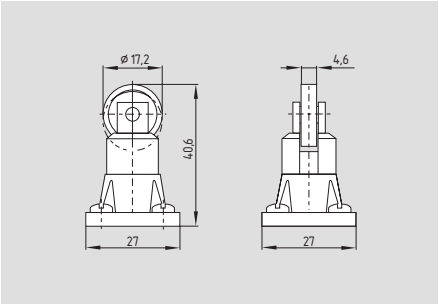

- Actuator type C to EN 50041
- Required actuating force
  Slow action: 17 N
- Actuating speed with actuating angle 30° to switch axis: max. 0.5 m/s

Contact variants

Contacts/ Switch travel	Slow action	Slow action with overlapping contacts
1 NO / 1 NC	**EX-TR 335-11Y** 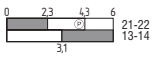	**EX-TR 335-11YUE** 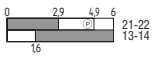
2 NC	**EX-TR 335-02Y** 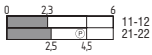	
2 NO	**EX-TR 335-20Y**	

в Беларуси Заказ г.Минск viber и тел.+375447584780 email: minsk17@tut.by

Roller lever H

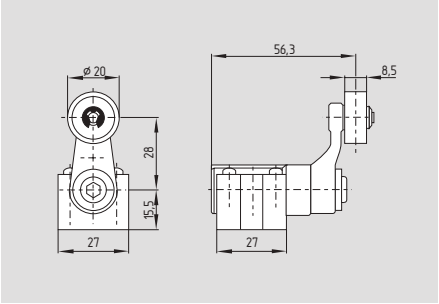

- Actuator type A to EN 50041
- Required actuating torque
  Slow action: 31 Ncm
- Actuating speed with actuating angle 30° to switch axis: max. 2.5 m/s

Contact variants

Contacts/ Switch travel	Slow action	Slow action with overlapping contacts
1 NO / 1 NC	**EX-T4VH 335-11Y** 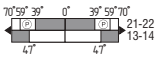	**EX-T4VH 335-11YUE** 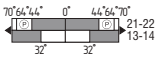
2 NC	**EX-T4VH 335-02Y** 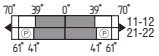	
2 NO	**EX-T4VH 335-20Y** 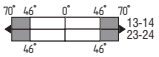	

Rod lever 10H

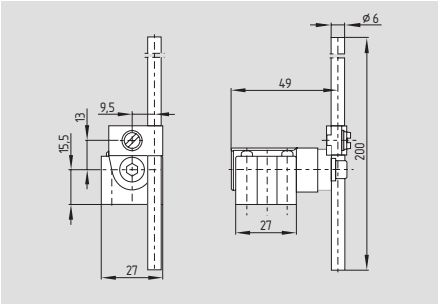

- **only for positioning tasks**
- Actuator type D to EN 50041
- Plastic rod
- Required actuating torque
  Slow action: 31 Ncm
- Actuating speed with actuating angle 30° to switch axis: max. 2.5 m/s

Contact variants

Contacts/ Switch travel	Slow action	Slow action with overlapping contacts
1 NO / 1 NC	**EX-T4V10H 335-11Y** 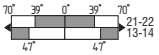	**EX-T4V10H 335-11YUE** 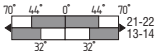
2 NC	**EX-T4V10H 335-02Y** 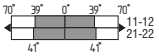	
2 NO	**EX-T4V10H 335-20Y** 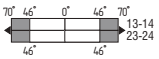	

в Беларуси Заказ г.Минск viber и тел.+375447584780 email: minsk17@tut.by

Roller lever 7H

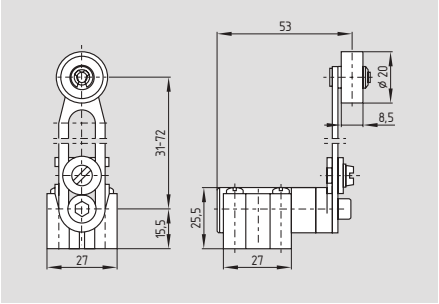

- **only for positioning tasks**
- Required actuating torque
- Slow action: 31 Ncm
- Actuating speed with actuating angle 30° to switch axis: max. 2.5 m/s

Contact variants

Contacts/ Switch travel	Slow action	Slow action with overlapping contacts
1 NO / 1 NC	**EX-T4V7H 335-11Y** 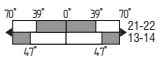	**EX-T4V7H 335-11YUE** 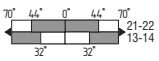
2 NC	**EX-T4V7H 335-02Y** 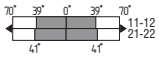	
2 NO	**EX-T4V7H 335-20Y** 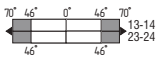	

7H-2138

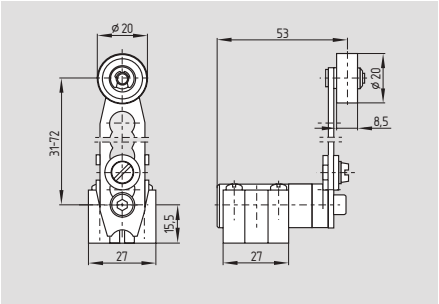

- for safety duties ⊖
- Required actuating torque Slow action: 31 Ncm
- Actuating speed with actuating angle 30° to switch axis: max. 2.5 m/s

Contact variants

Contacts/ Switch travel	Slow action	Slow action with overlapping contacts
1 NO / 1 NC	**EX-T4V7H 335-11Y -2138** 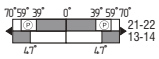	**EX-T4V7H 335-11YUE-2138** 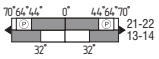
2 NC	**EX-T4V7H 335-02Y -2138** 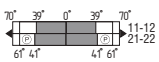	
2 NO	**EX-T4V7H 335-20Y -2138** 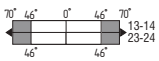	

в Беларуси Заказ г.Минск viber и тел.+375447584780 email: minsk17@tut.by

Offset roller lever 1K

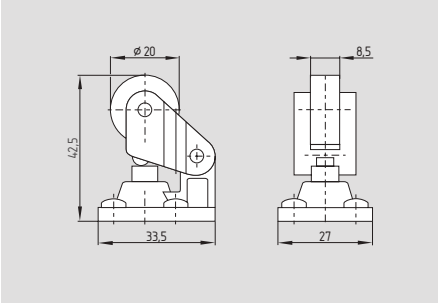

- Required actuating force
  Slow action: 17 N
- Actuating speed with actuating angle 30° to switch axis: max. 0.5 m/s

Contact variants

Contacts/ Switch travel	Slow action	Slow action with overlapping contacts
1 NO / 1 NC	**EX-T1K 335-11Y** 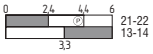	**EX-T1K 335-11YUE** 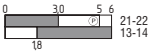
2 NC	**EX-T1K 335-02Y**	
2 NO	**EX-T1K 335-20Y** 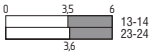	

Angle roller lever 3K

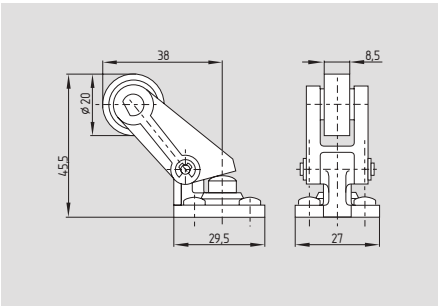

- Required actuating force
  Slow action: 17 N
- Actuating speed with actuating angle 30° to switch axis: max. 0.5 m/s
- Actuation parallel to axis of switch from below

Contact variants

Contacts/ Switch travel	Slow action	Slow action with overlapping contacts
1 NO / 1 NC	**EX-T3K 335-11Y** 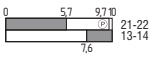	**EX-T3K 335-11YUE** 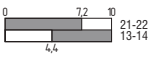
2 NC	**EX-T3K 335-02Y** 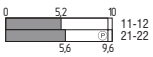	
2 NO	**EX-T3K 335-20Y** 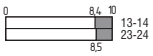	

в Беларуси Заказ г.Минск viber и тел.+375447584780 email: minsk17@tut.by

More Details

Detailed technical information at:
www.schmersal.net

в Беларуси Заказ г.Минск viber и тел.+375447584780 email: minsk17@tut.by

EX-T/M 441-...

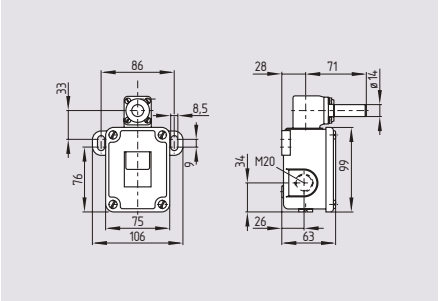

- Ex certified
- Metal enclosure
- Slow action, change-over contact with double break
- Snap action, change-over contact with double break
- 2 cable entries M20
- Protection class IP65, IP66 and IP67
- Suitable for heavy duty

Approvals

Technical data

Equipment category:	⟨Ex⟩ II 2D
Ex protection:	Ex tD A21 IP65 T90°C X
Standards:	EN 60947-5-1; EN 61241-0, EN 61241-1
Enclosure:	Grey cast iron, galvanized and painted
Protection class:	IP65, IP66 and IP67 to EN 60529
Contact material:	silver, gold-flashed
Switching system:	Snap- and slow action with double break
Contact type:	Slow action: positive break NC contact ⊖ double break of 2 separated contact bridges
Connection:	screw terminals M 4
Cable section:	max. 2.5 mm² (incl. conductor ferrules)
U_{imp}:	Snap action: 4 kV; Slow action: 6 kV
U_i:	Slow action: 250 V; Snap action: 400 V
I_{the}:	16 A
I_e/U_e:	Snap action: 4 A / 230 V; Slow action: 4 A / 400 V
Utilisation category:	AC-15
Max. fuse rating:	16 A gG D-fuse
Contact break:	Snap action: max. 2 × 2.5 mm Slow action: max. 2 × 6.0 mm
Switchover time:	Snap action: 35 ms
Bounce duration:	Snap action: 5 ms
Ambient temperature:	– 20 °C … + 60 °C
Mechanical life:	10 million operations
Switching frequency:	max. 3000/h
Cable cross-section of the cable glands:	min. Ø 7 mm max. Ø 12 mm
	⟨Ex⟩ II 2D

Contact variants

1 NO / 1 NC contacts

Snap action

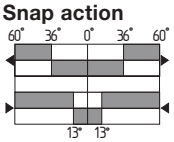

Slow action

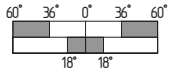

Ordering details

EX-①441-11Y-②-1276-2

N°	Option	Description
①	M.	Snap action
	T.	Slow action
②	UE	Slow action with overlapping contacts

Ordering details

see page 84

EX-certified screwed cable gland	**EX-KLE-M20x1.5**
EX-certified screwed cable gland	**EX-KLE-M25x1.5**
EX-certified screw plug	**EX-VS-M20x1.5**
EX-certified screw plug	**EX-VS-M25x1.5**

see page 76
Actuator selection (actuators must be ordered separatedly)

в Беларуси Заказ г.Минск viber и тел.+375447584780 email: minsk17@tut.by

EX-T/M 250-...

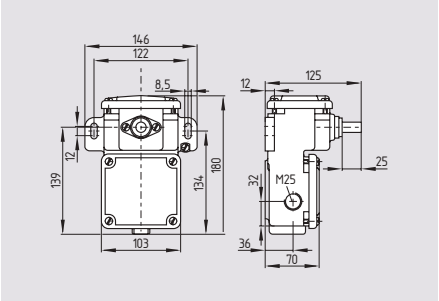

- Ex certified
- Metal enclosure
- Slow action, change-over contact with double break
- Snap action, change-over contact with double break
- 2 cable entries M25
- Protection class IP65, IP66 and IP67
- Suitable for heavy duty

Technical data

Equipment category:	Ⓔx II 2D
Ex protection:	Ex tD A21 IP67 T90°C
Standards:	EN 60947-5-1; EN 61241-0, EN 61241-1
Enclosure:	Grey cast iron, galvanized and painted
Protection class:	IP65, IP66 and IP67 to EN 60529
Contact material:	silver, gold-flashed
Contact type:	snap action, change-over contact, slow action positive break NC contact ⊖ double break with 2 separate contact bridges
Switching system:	Snap- and slow action
Connection:	screw terminals M 4
Cable section:	max. 2.5 mm² (incl. conductor ferrules)
U_{imp}:	6 kV
U_i:	500 V
I_{the}:	16 A
I_e/U_e:	4 A / 400 VAC
Utilisation category:	AC-15
Max. fuse rating:	16 A gG D-fuse
Contact break:	Snap action: max. 2 × 2.5 mm Slow action: max. 2 × 2 mm
Switchover time:	35 ms
Bounce duration:	5 ms
Ambient temperature:	– 20 °C … + 60 °C
Mechanical life:	10 million operations
Switching frequency:	max. 3000/h
Cable cross-section of the cable glands:	min. Ø 14 mm max. Ø 18 mm Ⓔx II 2D

Contact variants

1 NO / 1 NC contacts

Snap action

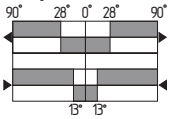

Slow action

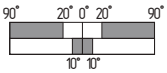

2 NO / 2 NC contacts

Snap action

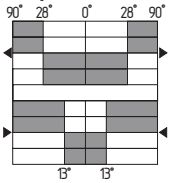

Slow action

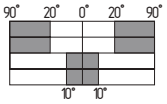

Approvals

Ⓔx IECEx CE

Ordering details

EX-①250-②Z-1276-2

No.	Option	Description
①	M.	Snap action
	T.	Slow action
②	11	1 NO/1 NC contacts
	22	2 NO/2 NC

Ordering details

see page 84

EX-certified screwed cable gland	**EX-KLE-M20x1.5**
EX-certified screwed cable gland	**EX-KLE-M25x1.5**
EX-certified screw plug	**EX-VS-M20x1.5**
EX-certified screw plug	**EX-VS-M25x1.5**

see page 76
Actuator selection (actuators must be ordered separatedly)

в Беларуси Заказ г.Минск viber и тел.+375447584780 email: minsk17@tut.by

EX-TS 064-...

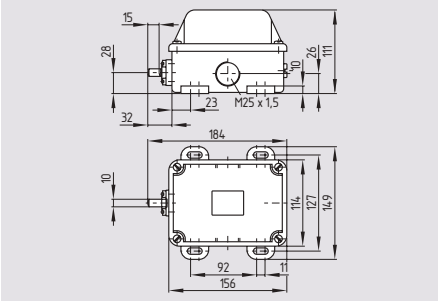

- Ex certified
- Metal enclosure
- 3 or 4 contact, slow action ⊖
- Roller levers J and X can be subsequently fitted at plunger S
- Actuator head can be repositioned in steps 4 x 90°
- 2 cable entries M25
- Protection class IP65, IP66 and IP67

Actuation from the side of the plunger should be avoided, since this reduces the mechanical life of the position switch. Recommendation: use roller lever

Technical data

Equipment category:	⟨Ex⟩ II 2D
Ex protection:	Ex tD A21 IP65 T90°C X
Standards:	EN 60947-5-1, EN 61241-0, EN 61241-1
Enclosure:	Grey cast iron, galvanized and painted
Actuating speed:	max. 1 m/s, min. 0.01 m/s at the plunger
Protection class:	IP65, IP66 and IP67 to EN 60529
Contact material:	silver, gold-flashed
Switching system:	slow action with double break
Contact type:	NC contact positive break ⊖
Connection:	screw terminals M 5
Cable section:	max. 4 mm² (incl. conductor ferrules)
U_{imp}:	6 kV
U_i:	500 V
I_{the}:	25 A
I_e/U_e:	25 A / 400 VAC
Utilisation category:	AC-15
Max. fuse rating:	16 A gG D-fuse
Allowed horsepower:	at 400 V 3-phase 5.5 kW (squirrel-cage rotor n = 1500 rpm)
Contact break:	max. 2 x 4 mm
Ambient temperature:	– 20 °C ... + 60 °C
Mechanical life:	1 million operations
Switching frequency:	max. 1000/h
Actuating angle:	max. 20°
Weight:	approx. 3.2 kg
Cable cross-section of the cable glands:	min. Ø 14 mm max. Ø 18 mm
	⟨Ex⟩ II 2D

Contact variants

Plunger S
1 NO contact / 1 NC contact

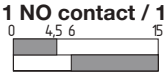

Offset roller lever J
1 NO contact / 1 NC contact

Offset roller lever X
1 NO contact / 1 NC contact

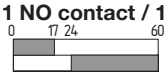

Approvals

Ordering details

EX-T① 064-②Y-③-1276-2

N°	Option	Description
①		For the appropriate actuator: see page 72
②	03	3 NC contacts
	12	1 NO/2 NC
	21	2 NO/1 NC
	30	3 NO contacts
	04	4 NC contacts
	13	1 NO/3 NC
	22	2 NO/2 NC
	31	3 NO/1 NC
	40	4 NO contacts
③	UE	Slow action with overlapping contacts
	H	with staggered contacts

Force-travel diagram

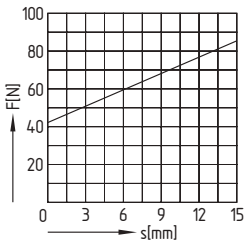

Ordering details

EX-certified screwed cable gland	**EX-KLE-M25x1.5**
EX-certified screw plug	**EX-VS-M25x1.5**

в Беларуси Заказ г.Минск viber и тел.+375447584780 email: minsk17@tut.by

EX-MS 064-...

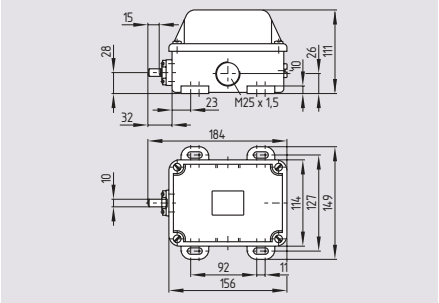

- Ex certified
- Metal enclosure
- 3 or 4 contact, snap action with double break
- Roller levers J and X can be subsequently fitted at plunger S
- Actuator head can be repositioned in steps 4 x 90°
- 2 cable entries M25
- Protection class IP65, IP66 and IP67

Actuation from the side of the plunger should be avoided, since this reduces the mechanical life of the position switch. Recommendation: use roller lever

Technical data

Equipment category:	⟨Ex⟩ II 2D
Ex protection:	Ex tD A21 IP65 T90°C X
Standards:	EN 60947-5-1, EN 61241-0, EN 61241-1
Enclosure:	Grey cast iron, galvanized and painted
Protection class:	IP65, IP66 and IP67 to EN 60529
Contact material:	silver, gold-flashed
Switching system:	snap action with double break
Contact type:	change-over contact, galvanically separated contact bridges
Connection:	screw terminals M 5
Cable section:	max. 4 mm² (incl. conductor ferrules)
U_{imp}:	6 kV
U_i:	500 V
I_{the}:	25 A
I_e/U_e:	25 A / 400 VAC
Utilisation category:	AC-15
Max. fuse rating:	25 A gG D-fuse
Allowed horsepower:	at 400 V 3-phase 5.5 kW (squirrel-cage rotor n = 1500 rpm)
Contact break:	max. 2 x 4 mm
Ambient temperature:	– 20 °C ... + 60 °C
Mechanical life:	30000 operations
Switching frequency:	max. 1000/h
Actuating speed:	max. 1 m/s, min. 0.01 m/s at the plunger
Actuating angle:	max. 20°
Weight:	approx. 3.6 kg
Cable cross-section of the cable glands:	min. Ø 14 mm max. Ø 18 mm
	⟨Ex⟩ II 2D

Contact variants

Plunger S

1 NC contact

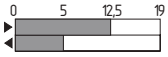

1 NO contact

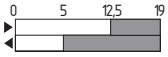

Offset roller lever J

1 NC contact

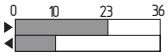

1 NO contact

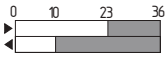

Offset roller lever X

1 NC contact

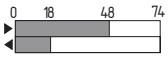

1 NO contact

Approvals

⟨Ex⟩ IECEx CE

Ordering details

EX-M① 064-②Y-1276-2

No.	Option	Description
①	For the appropriate actuator: see page 72	
②	03	3 NC contacts
	12	1 NO/2 NC
	21	2 NO/1 NC
	30	3 NO contacts
	04	4 NC contacts
	13	1 NO/3 NC
	22	2 NO/2 NC
	31	3 NO/1 NC
	40	4 NO contacts

Force-travel diagram

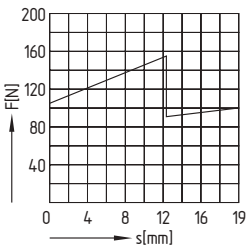

Ordering details

EX-certified screwed cable gland	**EX-KLE-M25x1.5**
EX-certified screw plug	**EX-VS-M25x1.5**

в Беларуси Заказ г.Минск viber и тел.+375447584780 email: minsk17@tut.by

Position switches

System components

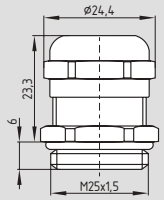

EX-certified screwed cable gland

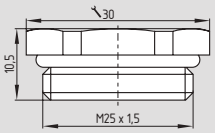

EX-certified screw plug

Plunger S

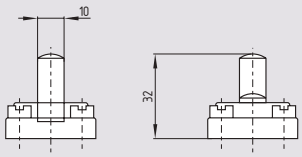

- Actuating speed 1 m/s with an actuating angle of max. 20°
- Roller levers J and X can be subsequently fitted at plunger S

Actuation from the side of the plunger should be avoided, since this reduces the mechanical life of the position switch.
Recommendation: use roller lever

Offset roller lever J

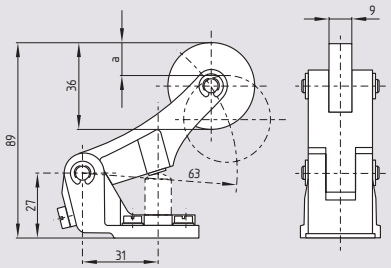

- Actuating speed max. 0.5 m/s with an actuating angle of a = 45° and b = 30°
- Plastic roller (metal roller on request)
- Actuator head can be repositioned in steps 4 x 90°
- Available with rubber roller, ordering suffix -1

Actuation from the right side of the plunger should be avoided, since this reduces the mechanical life of the position switch.

Offset roller lever X

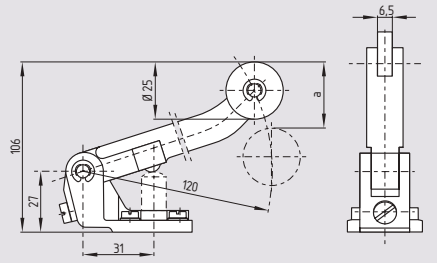

- Actuating speed max. 0.5 m/s with an actuating angle of α = 45° and β = 30°
- Plastic roller (metal roller on request)
- Actuator head can be repositioned in steps 4 x 90°

Actuation from the right side of the plunger should be avoided, since this reduces the mechanical life of the position switch.

Note

Legend
α: Actuating angle from right of switch axis
β: Actuating angle from left of switch axis

Ordering details

EX-certified screwed cable gland	**EX-KLE-M25x1.5**
EX-certified screw plug	**EX-VS-M25x1.5**

в Беларуси Заказ г.Минск viber и тел.+375447584780 email: minsk17@tut.by

EX-T. 064-...

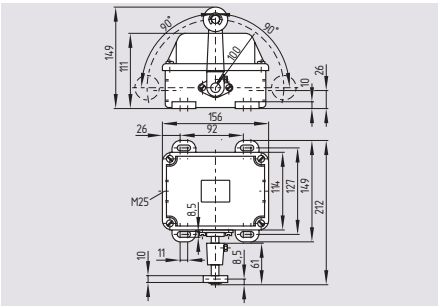

- Ex certified
- Metal enclosure
- 3 contact, slow action ⊖
- Actuating direction, each time 90° right-hand side and left-hand side rotation
- 2 cable entries M25
- Protection class IP65, IP66 and IP67
- Splined shaft and lever available with 10° toothing

Technical data

Equipment category:	⟨Ex⟩ II 2D
Ex protection:	Ex tD A21 IP65 T90°C X
Standards:	EN 60947-5-1, EN 61241-0, EN 61241-1
Enclosure:	Grey cast iron, galvanized and painted
Protection class:	IP65, IP66 and IP67 to EN 60529
Contact material:	silver, gold-flashed
Switching system:	slow action with double break
Contact type:	NC contact positive break ⊖
Connection:	screw terminals M 5
Cable section:	max. 4 mm² (incl. conductor ferrules)
U_{imp}:	6 kV
U_i:	500 V
I_{the}:	25 A
I_e/U_e:	25 A / 400 VAC
Utilisation category:	AC-15
Max. fuse rating:	16 A gG D-fuse
Allowed horsepower:	at 400 V 3-phase 5.5 kW (squirrel-cage rotor n = 1500 rpm)
Contact break:	max. 2 x 4 mm
Ambient temperature:	– 20 °C ... + 60 °C
Mechanical life:	1 million operations
Switching frequency:	max. 1000/h
Actuating speed:	max. 3 m/s, min. 0.05 m/s
Actuating angle:	max. 30°
Weight:	approx. 3.5 kg
Cable cross-section of the cable glands:	min. Ø 14 mm max. Ø 18 mm
	⟨Ex⟩ II 2D

Contact variants

Roller lever
1 NO contact
1 NC contacts

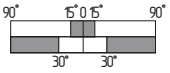

only NO contacts

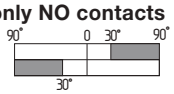

only NC contacts

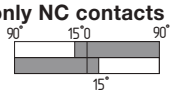

Approvals

⟨Ex⟩ IECEx CE

Ordering details

EX-T. 064-①Y-②-1276-2③

No.	Option	Description
①	03	3 NC contacts
	12	1 NO/2 NC
	21	2 NO/1 NC
	30	3 NO contacts
	01/02	1 NC to the left/2 NC to the right
	02/01	2 NC to the left/1 NC to the right
	10/20	1 NC to the left/2 NC to the right
	20/10	2 NC to the left/1 NC to the right
②	H	with staggered contacts
	R	Latching 2 x 45°
③	1877	Toothed shaft

Force-travel diagram

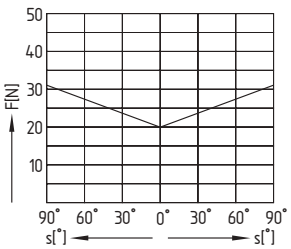

Ordering details

see page 72
EX-certified screwed cable gland **EX-KLE-M25x1.5**
EX-certified screw plug **EX-VS-M25x1.5**

see page 76
Actuator selection (actuators must be ordered separatedly)

в Беларуси Заказ г.Минск viber и тел.+375447584780 email: minsk17@tut.by

EX-M. 064 R

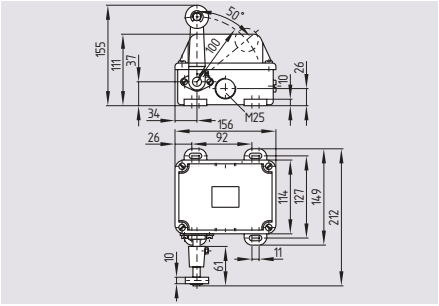

- Ex certified
- Metal enclosure
- 3 or 4 contact, snap action with double break
- Actuating direction always 50° right-hand side rotation
- 2 cable entries M25
- Protection class IP65, IP66 and IP67
- Splined shaft and lever available with 10° toothing

Technical data

Equipment category:	Ⓔx II 2D
Ex protection:	Ex tD A21 IP65 T90°C X
Standards:	EN 60947-5-1, EN 61241-0, EN 61241-1
Enclosure:	Grey cast iron, galvanized and painted
Protection class:	IP65, IP66 and IP67 to EN 60529
Contact material:	silver, gold-flashed
Switching system:	snap action with double break
Contact type:	change-over contact, galvanically separated contact bridges
Connection:	screw terminals M 5
Cable section:	max. 4 mm² (incl. conductor ferrules)
U_{imp}:	6 kV
U_i:	500 V
I_{the}:	25 A
I_e/U_e:	25 A / 400 VAC
Utilisation category:	AC-15
Max. fuse rating:	25 A gG D-fuse
Allowed horsepower:	bei 400 V 3-phase 5.5 kW (squirrel-cage rotor n = 1500 rpm)
Contact break:	max. 2 x 4 mm
Ambient temperature:	– 20 °C … + 60 °C
Mechanical life:	30000 operations
Switching frequency:	max. 1000/h
Actuating speed:	max. 3 m/s, min. 0.05 m/s
Actuating angle:	max. 30°
Weight:	approx. 3.7 kg
Cable cross-section of the cable glands:	min. Ø 14 mm max. Ø 18 mm
	Ⓔx II 2D

Contact variants

Roller lever
1 NC contacts

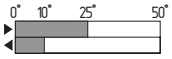

1 NO contact

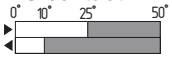

Approvals

Ⓔx IECEx CE

Ordering details

EX-M. 064-①-Y-R-1276-2②

No.	Option	Description
①	12	1 NO/2 NC
	21	2 NO/1 NC
	30	3 NO contacts
	22	2 NO/2 NC contacts
	31	3 NO/1 NC
	40	4 NO contacts
②	1877	Toothed shaft

Force-travel diagram

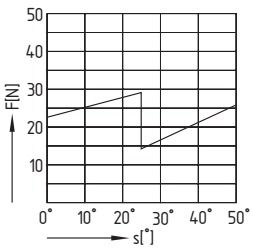

Ordering details

see page 72
EX-certified screwed cable gland **EX-KLE-M25x1.5**
EX-certified screw plug **EX-VS-M25x1.5**

see page 76
Actuator selection (actuators must be ordered separatedly)

в Беларуси Заказ г.Минск viber и тел.+375447584780 email: minsk17@tut.by

EX-M. 064 L

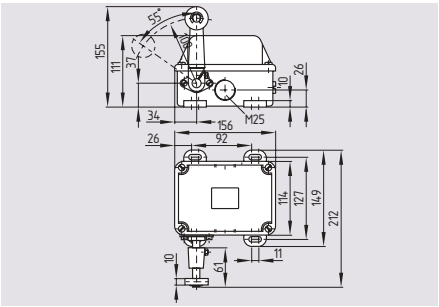

- Ex certified
- Metal enclosure
- 3 or 4 contact, snap action with double break
- Actuating direction always 55° left-hand side rotation
- 2 cable entries M25
- Protection class IP65, IP66 and IP67
- Splined shaft and lever available with 10° toothing

Technical data

Equipment category:	Ⓔx II 2D
Ex protection:	Ex tD A21 IP65 T90°C X
Standards:	EN 60947-5-1, EN 61241-0, EN 61241-1
Enclosure:	Grey cast iron, galvanized and painted
Protection class:	IP65, IP66 and IP67 to EN 60529
Contact material:	silver, gold-flashed
Switching system:	snap action with double break
Contact type:	change-over contact, galvanically separated contact bridges
Connection:	screw terminals M 5
Cable section:	max. 4 mm² (incl. conductor ferrules)
U_{imp}:	6 kV
U_i:	500 V
I_{the}:	25 A
I_e/U_e:	25 A / 400 VAC
Utilisation category:	AC-15
Max. fuse rating:	25 A gG D-fuse
Allowed horsepower:	at 400 V 3-phase 5.5 kW (squirrel-cage rotor n = 1500 rpm)
Contact break:	max. 2 x 4 mm
Ambient temperature:	– 20 °C … + 60 °C
Mechanical life:	30000 operations
Switching frequency:	max. 1000/h
Actuating speed:	max. 3 m/s, min. 0.05 m/s
Actuating angle:	max. 30°
Weight:	approx. 3.7 kg
Cable cross-section of the cable glands:	min. Ø 14 mm max. Ø 18 mm
	Ⓔx II 2D

Contact variants

Roller lever
1 NC contacts

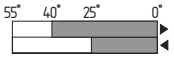

1 NO contact

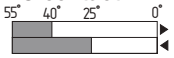

Approvals

Ⓔx IECEx CE

Ordering details

EX-M. 064-①Y-L-1276-2②

No.	Option	Description
①	03	3 NC contacts
	12	1 NO/2 NC
	21	2 NO/1 NC
	04	4 NC contacts
	13	1 NO/3 NC
	22	2 NO/2 NC contacts
②	1877	Toothed shaft

Force-travel diagram

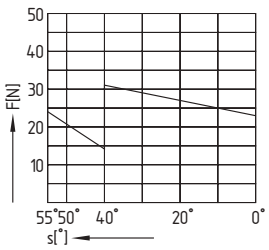

Ordering details

see page 72
EX-certified screwed cable gland **EX-KLE-M25x1.5**
EX-certified screw plug **EX-VS-M25x1.5**

see page 76
Actuator selection (actuators must be ordered separatedly)

в Беларуси Заказ г.Минск viber и тел.+375447584780 email: minsk17@tut.by

Position switches

Roller lever L

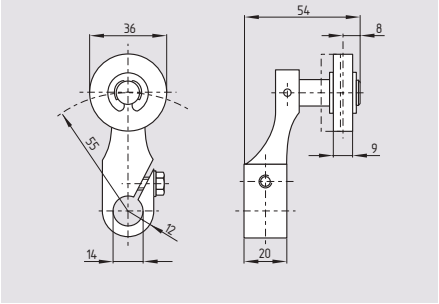

- Actuating speed max. 3 m/s with an actuating angle of a and b = 30°
- Plastic roller
- Continuous adjustment of lever position 360°
- Splined shaft and lever available with 10° toothing
- Available with metal roller
- Available with rubber roller, ordering suffix -1

Roller lever V

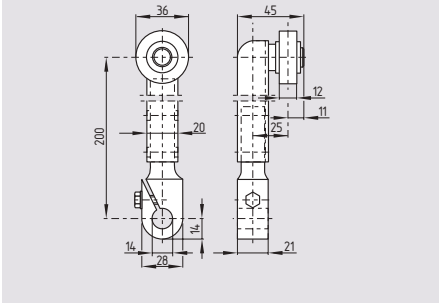

- Actuating speed max. 3 m/s with an actuating angle of a and b = 30°
- Plastic roller
- Continuous adjustment of lever position 360°
- Splined shaft and lever available with 10° toothing
- Available with metal roller
- Available with rubber roller, ordering suffix -1

Fork lever C

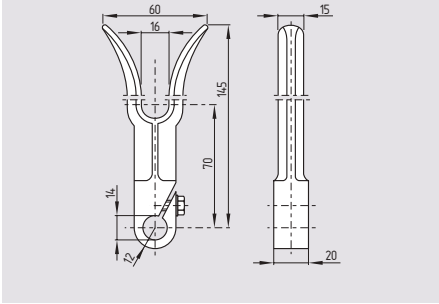

- Continuous adjustment of lever position 360°
- Splined shaft and lever available with 10° toothing

Roller lever A

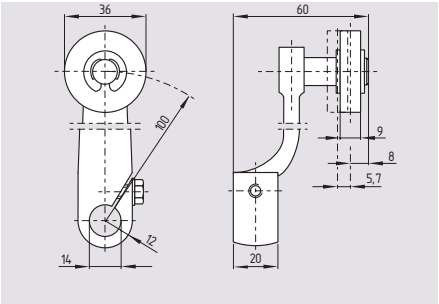

- Actuating speed max. 3 m/s with an actuating angle of a and b = 30°
- Plastic roller
- Continuous adjustment of lever position 360°
- Splined shaft and lever available with 10° toothing
- Available with metal roller
- Available with rubber roller, ordering suffix -1

Pull lever Z

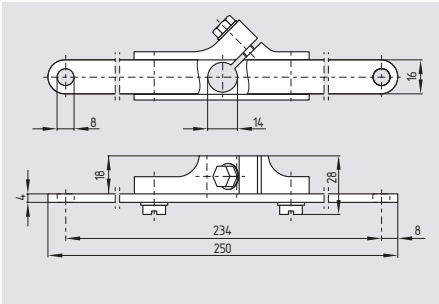

- Continuous adjustment of lever position 360°
- Splined shaft and lever available with 10° toothing

Offset roller lever 4D

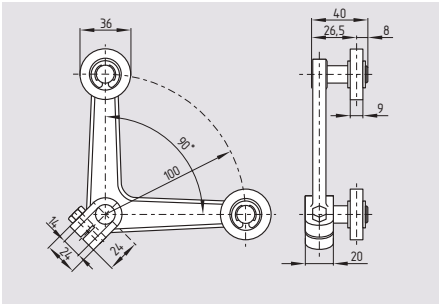

- Continuous adjustment of lever position 360°
- Splined shaft and lever available with 10° toothing

Roller lever 2A

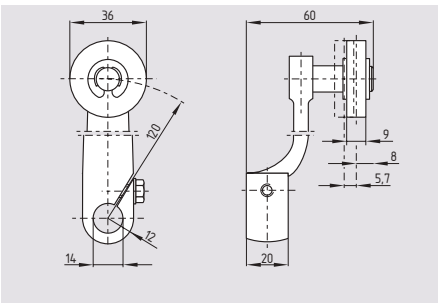

- Actuating speed max. 3 m/s with an actuating angle of a and b = 30°
- Plastic roller
- Continuous adjustment of lever position 360°
- Splined shaft and lever available with 10° toothing
- Available with metal roller
- Available with rubber roller, ordering suffix -1

Pull lever 2Z

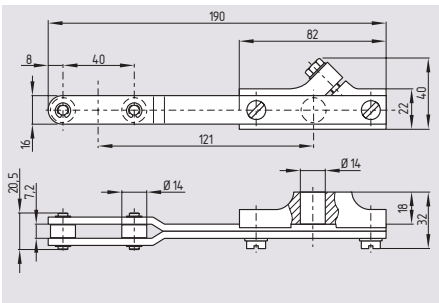

- Continuous adjustment of lever position 360°
- Splined shaft and lever available with 10° toothing

Legend

α: Actuating angle from right of switch axis

β: Actuating angle from left of switch axis

в Беларуси Заказ г.Минск viber и тел.+375447584780 email: minsk17@tut.by

Safety switch for hinged guards

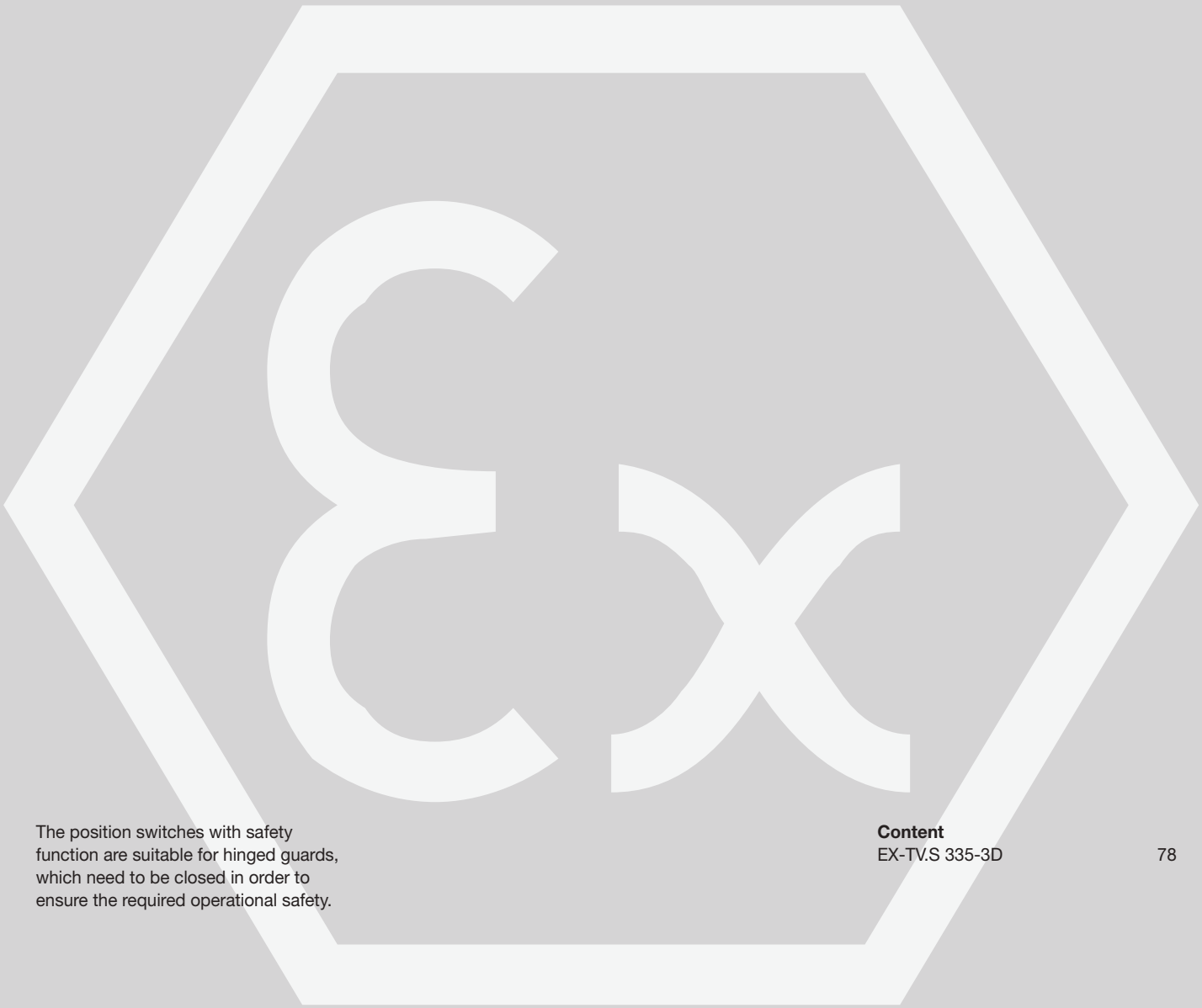

The position switches with safety function are suitable for hinged guards, which need to be closed in order to ensure the required operational safety.

Content

EX-TV.S 335-3D 78

в Беларуси Заказ г.Минск viber и тел.+375447584780 email: minsk17@tut.by

Safety switch for hinged guards

EX-TV.S 335-3D

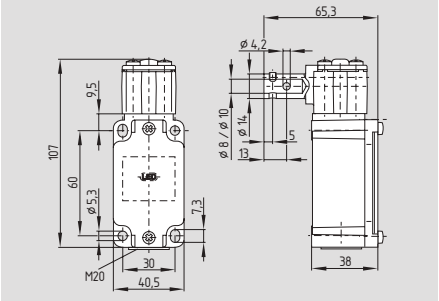

- Metal enclosure
- Good resistance to oil and petroleum spirit
- The actuator can be turned by 4 x 90° using Torx T 20 screwdriver with pin
- Actuator shaft can be turned 360°
- 1 Cable entry M20
- Shaft bore Ø 8 and 10 mm

Approvals

Technical data

Equipment category:	⟨Ex⟩ II 3D
Ex protection:	Ex tD A22 IP67 T90°C X
Standards:	EN 60947-5-1; EN 61241-0; EN 61241-1; BG-GS-ET-15
Enclosure:	light-alloy diecast, paint finish
Actuator:	stainless steel 1.4301
Max. impact energy:	4 J
Actuating speed:	max. 1 m/s
Protection class:	IP67 to EN 60529
Contact material:	Silver
Contact types:	Change-over contact with double break type Zb, 3 NC contacts with galvanically separated contact bridges
Switching system:	⊖ EN 60947-5-1, slow action, positive break NC contact
Connection:	screw terminals
Cable section:	max. 2.5 mm², min. 0.75 mm² (incl. conductor ferrules)
Cable entry:	M20
U_{imp}:	6 kV
U_i:	500 V
I_{the}:	10 A
Utilisation category:	AC-15; DC-13
I_e/U_e:	4 A / 230 VAC 4 A / 24 VDC
Max. fuse rating:	6 A gG D-fuse
Positive break travel:	10.7 mm
Positive break force:	each NC contact 5 N
Ambient temperature:	– 20 °C … + 60 °C
Mechanical life:	> 1 million operations
Switching frequency:	max. 1000/h
Shaft bore:	Ø 8 mm / 10 mm
Positive break angle:	7°
Positive break torque:	0.6 Nm
B_{10d} value to EN ISO 13849-1:	20 million
Cable cross-section of the cable glands:	min. Ø 7 mm max. Ø 12 mm
	⟨Ex⟩ II 2D

Classification:

Standards:	EN ISO 13849-1
B_{10d} Opener (NC):	20,000,000
Service life:	20 years

$$MTTF_d = \frac{B_{10d}}{0{,}1 \times n_{op}} \qquad n_{op} = \frac{d_{op} \times h_{op} \times 3600\ s/h}{t_{cycle}}$$

Contact variants

1 NO contact
1 NC contacts

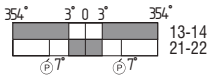

2 NC contacts

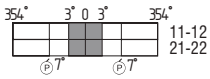

1 NO contact
2 NC contacts

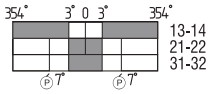

3 NC contacts

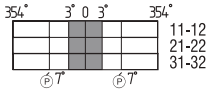

Ordering details

Ex-TV①S 335-②Z-③

No.	Option	Description
①	8	Shaft bore Ø 8 mm
	10	Shaft bore Ø 10 mm
②	02	2 NC contacts
	03	3 NC contacts
	11	1NO/1NC contact
	12	1NO/2NC contacts
③		Cable entry M20

Note

Closed guard device = 0° in contact switch travel diagrams.
The switch is in resting position.

- Adjustment tool: locking screw to fix, shaft pre-drilled to pin
- Universal joint available to compensate for axial displacement only for Ø 10 mm

в Беларуси Заказ г.Минск viber и тел.+375447584780 email: minsk17@tut.by

Safety switch for hinged guards

System components

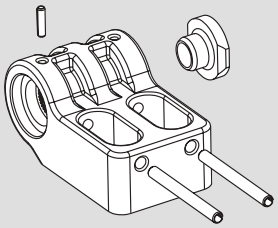

Fixed hinge F

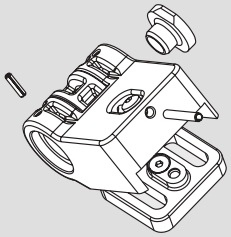

Adjustable hinge L

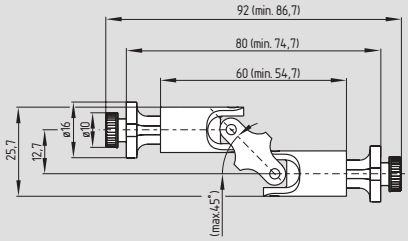

Universal joint K1

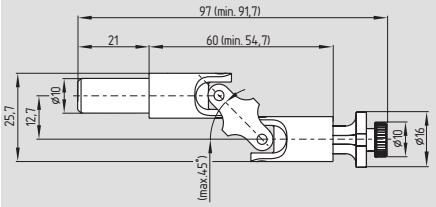

Universal joint K2

System components

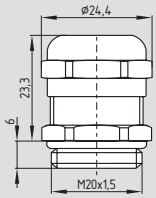

EX-certified screwed cable gland

Ordering details

Fixed hinge F	**101138414**
Adjustable hinge L	**101138413**
Universal joint K1 (in combination with hinge F or L) only for TV8S 521	**101138412**
Universal joint K2 for ES 13 SB, ES 95 SB-10mm, TV 10S 335 and TV10S 355	**101147448**

Ordering details

EX-certified screwed cable gland	**EX-KLE-M20x1.5**

в Беларуси Заказ г.Минск viber и тел.+375447584780 email: minsk17@tut.by

Ordering details

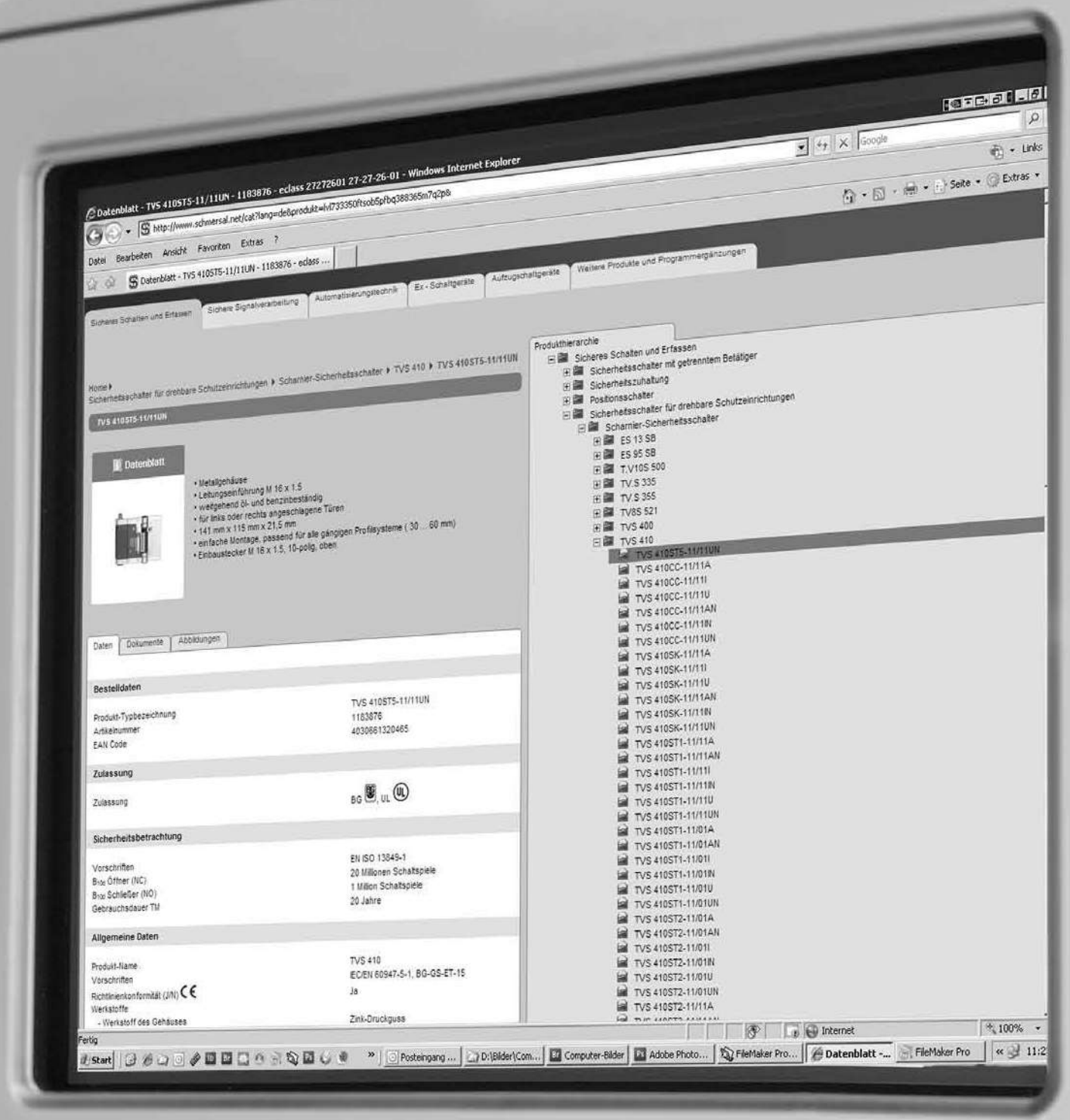

Detailed technical information at:
www.schmersal.com

в Беларуси Заказ г.Минск viber и тел.+375447584780 email: minsk17@tut.by

Belt alignment switch / Slack-wire switch

Belt alignment switches and slack-wire switches are suitable for use on material handling equipment. The belt alignment switch is actuated, when the conveyor belt becomes misaligned. Depending on the plant set-up, this signal can be used to switch off the machinery or plant either to provide an automatic correction of the belt alignment.

Content

EX-T/M 441-... 82
EX-T/M 250-... 83

в Беларуси Заказ г.Минск viber и тел.+375447584780 email: minsk17@tut.by

Belt alignment switch / Slack-wire switch

EX-T/M 441-...

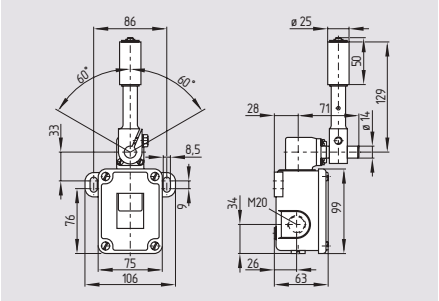

- Ex certified
- Metal enclosure
- Slow action, change-over contact with double break
- Snap action, change-over contact with double break
- 2 cable entries M20
- Belt alignment lever available with different roller lengths
- Protection class IP65, IP66 and IP67
- Suitable for heavy duty

Technical data

Equipment category:	Ⓔx II 2D
Ex protection:	Ex tD A21 IP65 T90°C X
Standards:	EN 60947-5-1; EN 61241-0, EN 61241-1
Enclosure:	Grey cast iron, galvanized and painted
Protection class:	IP65, IP66 and IP67 to EN 60529
Contact material:	silver, gold-flashed
Switching system:	Snap- and slow action with double break
Contact types:	Slow action: positive break NC contact ⊖; double break of 2 separated contact bridges
Connection:	screw terminals M 4
Cable section:	max. 2.5 mm² (incl. conductor ferrules)
U_{imp}:	snap action: 4 kV; slow action: 6 kV
U_i:	slow action: 250 V; snap action: 400 V
I_{the}:	16 A
I_e/U_e:	Snap action: 4 A / 230 V; Slow action: 4 A / 400 V
Utilisation category:	AC-15
Max. fuse rating:	16 A gG D-fuse
Contact break:	Snap action: max. 2 × 2.5 mm Slow action: max. 2 x 6.0 mm
Switchover time:	Snap action: 35 ms
Bounce duration:	Snap action: 5 ms
Ambient temperature:	– 20 °C … + 60 °C
Mechanical life:	10 million operations
Switching frequency:	max. 3000/h
Cable cross-section of the cable glands:	min. Ø 7 mm max. Ø 12 mm Ⓔx II 2D

Contact variants

1 NO contact
1 NC contacts

Snap action

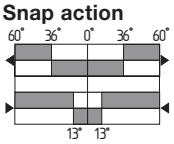

Slow action

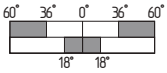

Approvals

Ⓔx IECEx CE

Ordering details

EX-①441-11Y-②-③-1276-2

No.	Option	Description
①	M.	Snap action
	T.	Slow action
②	UE	Slow action with overlapping contacts
③	Actuator selection, see page 84	

в Беларуси Заказ г.Минск viber и тел.+375447584780 email: minsk17@tut.by

Belt alignment switch / Slack-wire switch

EX-T/M 250-...

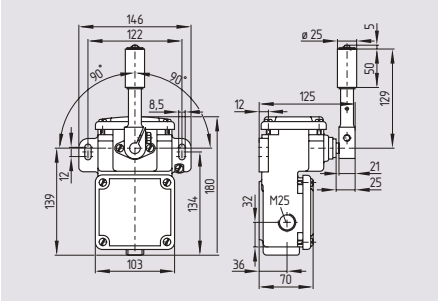

- Ex certified
- Metal enclosure
- Slow action, change-over contact with double break
- Snap action, change-over contact with double break
- 2 cable entries M25
- Belt alignment lever available with different roller lengths
- Protection class IP65, IP66 and IP67
- Suitable for heavy duty

Technical data

Equipment category:	Ⓔx II 2D
Ex protection:	Ex tD A21 IP67 T90°C X
Standards:	EN 60947-5-1; EN 61241-0, EN 61241-1
Enclosure:	Grey cast iron, galvanized and painted
Protection class:	IP65, IP66 and IP67 to EN 60529
Contact material:	silver, gold-flashed
Contact types:	snap action, change-over contact, slow action positive break NC contact ⊖ double break with 2 separate contact bridges
Switching system:	Snap- and slow action
Connection:	screw terminals M 4
Cable section:	max. 2.5 mm² (incl. conductor ferrules)
U_{imp}:	6 kV
U_i:	500 V
I_{the}:	16 A
I_e/U_e:	4 A / 400 VAC
Utilisation category:	AC-15
Max. fuse rating:	16 A gG D-fuse
Contact break:	Snap action: max. 2 × 2.5 mm Slow action: max. 2 x 2 mm
Switchover time:	35 ms
Bounce duration:	5 ms
Ambient temperature:	– 20 °C … + 60 °C
Mechanical life:	10 million operations
Switching frequency:	max. 3000/h
Cable cross-section of the cable glands:	min. Ø 14 mm max. Ø 18 mm
	Ⓔx II 2D

Contact variants

1 NO contact
1 NC contacts

Snap action

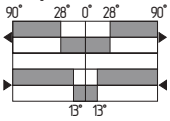

Slow action

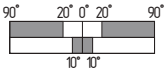

2 NO contact
2 NC contacts

Snap action

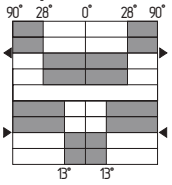

Slow action

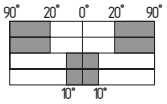

Approvals

Ⓔx IECEx CE

Ordering details

EX-①250-②Z-③-1276-2

No.	Option	Description
①	M.	Snap action
	T.	Slow action
②	11	1 NO/1 NC contact
	22	2 NO/2 NC contacts
③	Actuator selection, see page 84	

в Беларуси Заказ г.Минск viber и тел.+375447584780 email: minsk17@tut.by

Belt alignment switch / Slack-wire switch

System components

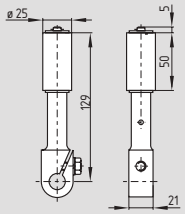

Belt alignment lever 243

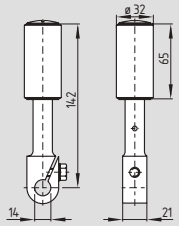

Belt alignment lever 966

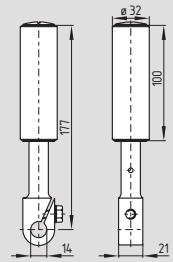

Belt alignment lever 1224

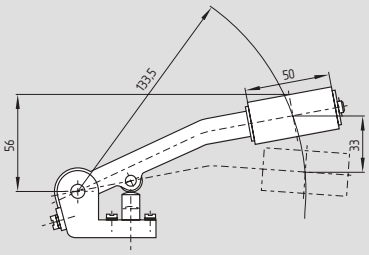

Slack-wire lever type 14

System components

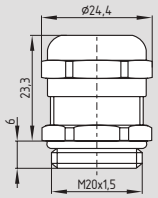

EX-certified screwed cable gland M20

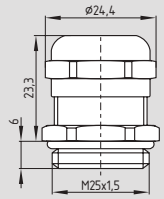

EX-certified screwed cable gland M25

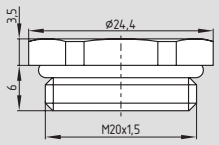

EX-certified screw plug M20

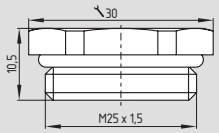

EX-certified screw plug M25

Ordering details

Belt alignment lever	
243	**Ordering suffix -243**
966	**Ordering suffix -966**
1224	**Ordering suffix -1224**
Slack-wire lever (only in combination with EX-T/M 441) type 14	**suffix -type 14**

Ordering details

EX-certified screwed cable gland	**EX-KLE-M20x1.5**
EX-certified screwed cable gland	**EX-KLE-M25x1.5**
EX-certified screw plug	**EX-VS-M20x1.5**
EX-certified screw plug	**EX-VS-M25x1.5**

в Беларуси Заказ г.Минск viber и тел.+375447584780 email: minsk17@tut.by

Pull-wire emergency-stop switches

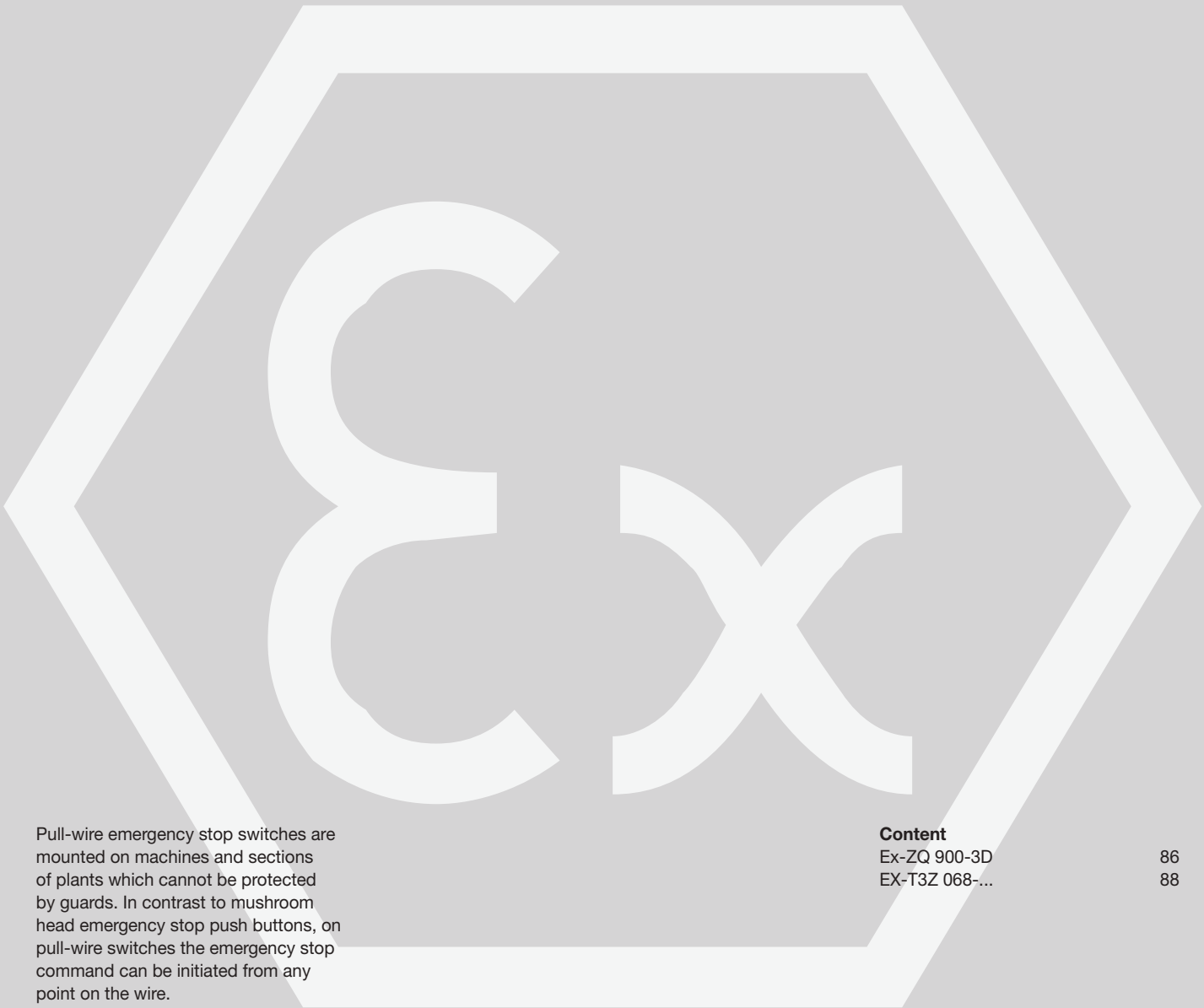

Pull-wire emergency stop switches are mounted on machines and sections of plants which cannot be protected by guards. In contrast to mushroom head emergency stop push buttons, on pull-wire switches the emergency stop command can be initiated from any point on the wire.

Content

Ex-ZQ 900-3D	86
EX-T3Z 068-...	88

в Беларуси Заказ г.Минск viber и тел.+375447584780 email: minsk17@tut.by

Pull-wire emergency-stop switches

Ex-ZQ 900-3D

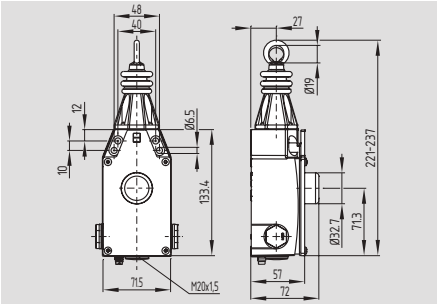

- to EN ISO 13850 / IEC 60947-5-5
- Metal enclosure
- 4 contacts
- position indication
- Robust design
- Large wiring compartment
- 3 cable entries M20
- One tension force for wire lengths from 5 to 50 m
- Wire up to 50 m long
- Reset pushbutton
- Twisting of towing eye not possible
- External watertight collar
- Wire pull and breakage detection
- Stainless
- Including Ex-certified screwed cable gland
- Including Ex-certified screw plug

Approvals

Technical data

Equipment category:	Ⓔx II 3D
Ex protection:	Ex tD A22 IP67 T100°C
Standards:	IEC/EN 60947-5-1; IEC/EN 60947-5-5; EN 61241-0 EN 61241-1; EN ISO 13850
Enclosure:	zinc die-cast, enamel finish
Cover:	Steel
Max. impact energy:	7 J
Protection class:	IP67 to IEC/EN 60529
Contact material:	Silver
Contact types:	1 NC / 1 NO or 2 NC / 2 NO or 3 NC / 1 NO or 2 NC or 4 NC
Switching system:	⊖ IEC 60947-5-1 snap action, NC contacts with positive break
Connection:	Screw terminals
Cable section:	max. 2.5 mm² (incl. conductor ferrules)
Cable entry:	3x M20
U_{imp}:	6 kV
U_i:	500 V
I_{the}:	4 A
Utilisation category:	AC-15, DC-13
I_e/U_e:	4 A / 230 VAC; 1 A / 24 VDC
Max. fuse rating:	6 A gG D-fuse
Ambient temperature:	– 20 °C … + 55 °C
Mechanical life:	> 1 million operations
Max. wire length:	50 m (Please observe the ambient temperature range and the wire supports)
Features:	wire pull and breakage detection
Cable cross-section of the cable glands:	min. Ø 7 mm max. Ø 12 mm Ⓔx II 2D

Classification:

Standards:	EN ISO 13849-1
B_{10d} Opener (NC):	100.000
Service life:	20 years

$$MTTF_d = \frac{B_{10d}}{0{,}1 \times n_{op}} \qquad n_{op} = \frac{d_{op} \times h_{op} \times 3600\ s/h}{t_{cycle}}$$

Contact variants

1 NO/1 NC contact

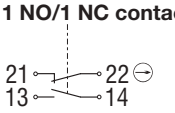

2 NC contacts

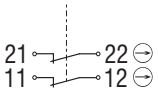

1 NO/3 NC contacts

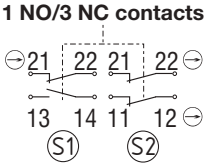

2 NO/2 NC contacts

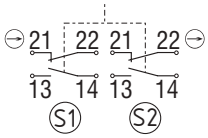

4 NC contacts

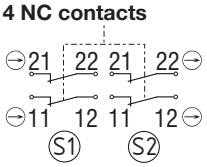

Ordering details

EX-ZQ 900-①-3D

No.	Option	Description
①	11	1 NO/1 NC contact
	13	1 NO/3 NC contacts
	22	2 NO/2 NC contacts
	02	2 NC contacts
	04	4 NC contacts

Note

Recommended cable lengths for pull-wire Emergency-Stop switches in relation to the range of ambient temperature.
At 5 m distance intermediate wire supports are required, see accessories

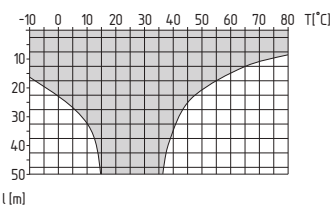

Ordering details

EX-certified screwed cable gland	**EX-KLE-M20x1.5**
EX-certified screw plug (not represented)	**EX-VS-M20x1.5**

в Беларуси Заказ г.Минск viber и тел.+375447584780 email: minsk17@tut.by

Pull-wire emergency-stop switches

Mode of operation

Wire pull and breakage detection

Not actuated

Wire pull detection

Wire breakage detection

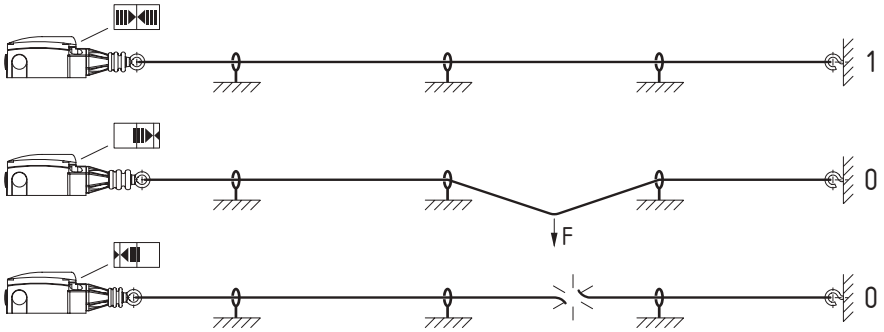

Mounting instructions

One-side operation

1 = Wire rope
2 = eyebolt
3 = nut
4 = Wire clamp
5 = tensioner
6 = wire thimble
7 = shackle
8 = wire tensioner

A = position indication
B = emergency-stop button

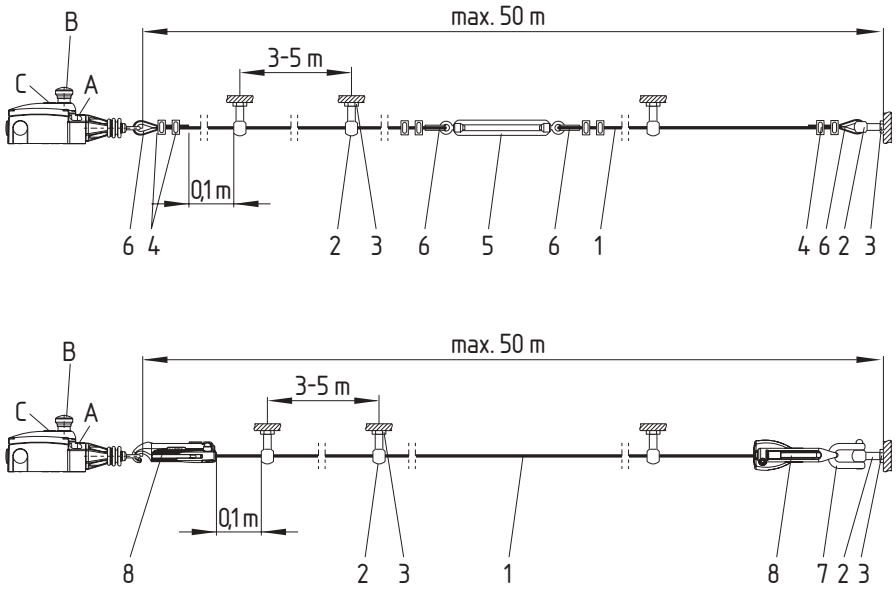

Mounting instructions

Thimble deformation

Note:
As the thimbles are subject to deformation in case of wire pull, the wire should be pulled several times after fitting.
After that, the wire must be re-tensioned using the eyebolt or the tensioner.

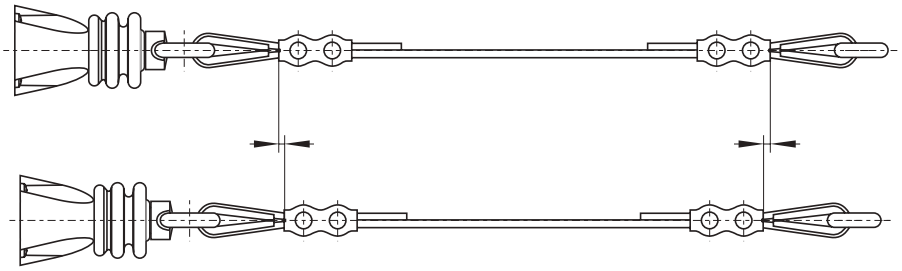

в Беларуси Заказ г.Минск viber и тел.+375447584780 email: minsk17@tut.by

Pull-wire emergency-stop switches

EX-T3Z 068-...

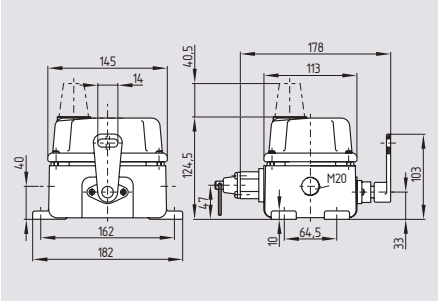

- Ex certified
- to EN ISO 13850 / EN 60947-5-5
- Metal enclosure
- Up to 6 contacts
- Robust design
- 2 cable entries M20
- Low actuating force
- Wire up to 2 x 50 m long
- Reset by pull ring

Approvals

Technical data

Equipment category:	⟨Ex⟩ II 2D
Ex protection:	Ex tD A21 IP65 T90°C X
Standards:	EN 60947-5-1; EN 60947-5-5; EN ISO 13850; EN 61241-0, EN 61241-1
Enclosure:	Grey cast iron, painted
Cover:	Grey cast iron, painted
Protection class:	IP65 and IP66 to EN 60529
Contact material:	silver, gold-flashed
Contact types:	Change-over contact with double break, max. 3 NO and 3 NC contacts
Switching system:	⊖ IEC 60947-5-1 snap action, NC contacts with positive break
Connection:	Screw terminals
Cable section:	max. 1.5 mm², min. 0.75 mm² solid and stranded wire with conductor ferrules
Cable entry:	2 x M 20
U_{imp}:	4 kV
U_i:	250 VAC
I_{the}:	10 A
Utilisation category:	AC-15, DC-13
I_e/U_e:	2.5 A / 230 VAC 6 A / 24 VDC
Max. fuse rating:	6 A gG D-fuse
Positive break torque:	1.8 Nm
Angle for positive break travel:	32°
Positive break force:	50 N
Actuating force:	max. 50 N, (30 N in wire direction)
Ambient temperature:	– 20 °C ... + 60 °C
Mechanical life:	50000 operations
Max. wire length:	2 x 50 m
Features:	wire pull and breakage detection
Cable cross-section of the cable glands:	min. Ø 7 mm max. Ø 12 mm ⟨Ex⟩ II 2D

Classification:

Standards:	EN ISO 13849-1
B_{10d} Opener (NC):	100,000
Service life:	20 years

$$MTTF_d = \frac{B_{10d}}{0{,}1 \times n_{op}} \qquad n_{op} = \frac{d_{op} \times h_{op} \times 3600\ s/h}{t_{cycle}}$$

Contact variants

1 NO contact
1 NC contacts

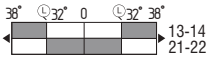

2 NO contact
2 NC contacts

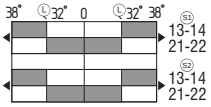

3 NO contact
3 NC contacts

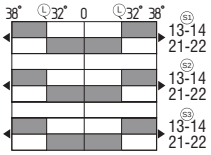

Ordering details

EX-T3Z 068-①YR-1637

No.	Option	Description
①	11	1NO/1NC contact
	22	2NO/2NC contacts
	33	3NO/3NC contacts

Note

At 3 m distance intermediate wire supports are required, see accessories

Ordering details

EX-certified screwed cable gland	**EX-KLE-M20x1.5**
EX-certified screw plug	**EX-VS-M20x1.5**

в Беларуси Заказ г.Минск viber и тел.+375447584780 email: minsk17@tut.by

Pull-wire emergency-stop switches

System components

Eyebolt

System components

Pulley

System components

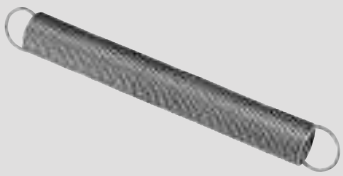

Tension spring

Wire clamp

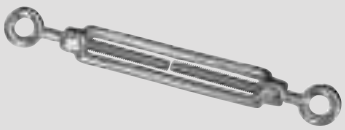

Tensioner

S 900 wire tensioner

Duplex wire clamp

Wire rope

Shackle

Wire thimble

Wire unit complete

Ordering details

Eyebolt	
BM 10 x 40	**101084928**
BM 8 x 70 (stainless steel)	**101192471**
Wire clamp 3 mm (stainless steel)	**101203477**
Duplex wire clamp 3 mm (stainless steel)	**101190917**
Wire thimble 4 mm (stainless steel)	**101203475**
Egg-shaped wire clamp (without Images)	**101077072**

Ordering details

Pulley (stainless steel)	**101192433**
Tensioner M6	**101087930**
Wire rope per m	**on request**
Wire unit complete	**on request**

Ordering details

Tension spring	**101186696**
S 900 wire tensioner	**101186704**
Shackle (stainless steel)	**101186490**

в Беларуси Заказ г.Минск viber и тел.+375447584780 email: minsk17@tut.by

Ordering details

Detailed technical information at:
www.schmersal.com

в Беларуси Заказ г.Минск viber и тел.+375447584780 email: minsk17@tut.by

Safety sensors

The use of magnetic safety sensors is of particular advantage, in cases where extremely dirty conditions can occur. This is provided by the simplicity of cleaning of the devices.
Another advantage is the possibility of concealed mounting behind non-magnetic materials. Working surfaces and storage areas can be designed without dust-collecting edges or other functional cut-outs and structures.
In applications, where a precise approach is not possible and larger tolerances are required, the magnetic safety sensors of the BNS series can also be used.

Content

EX-BNS 250-…-3G/D	92
EX-BNS 33-…-3G/D	94
EX-BNS 120-…-3G/D	96
EX-BNS 180-…-3G/D	98
EX-BNS 303-…-3G/D	100
EX-CSS 180-…-3G/D	102

в Беларуси Заказ г.Минск viber и тел.+375447584780 email: minsk17@tut.by

EX-BNS 250-...-3G/D

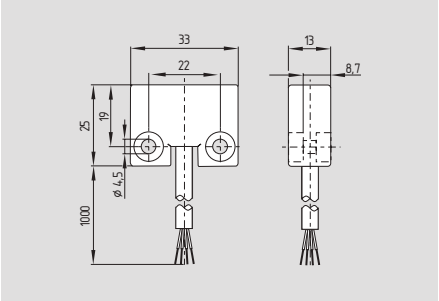

- Ex certified
- Thermoplastic enclosure
- with coding
- Smallest design
- long life, no mechanical wear
- Protection class IP67
- Actuation only possible with EX-BPS 250
- Intensitive to transverse misalignment
- Concealed mounting possible
- Intensitive to soiling

Approvals

Technical data

Equipment category:	II 3GD
Explosion protection:	
EX-BNS 250:	Ex nC IIC T6 X Ex tD A22 IP67 T80°C X
EX-BPS 250:	c 80°C
Standards:	EN 60947-5-3, EN 61241-0, EN 61241-1, EN 60079-0, EN 60079-15, BG-GS-ET-14
Design:	rectangular
Enclosure:	glass-fibre reinforced thermoplastic
Max. impact energy:	1 J
Protection class:	IP67 to EN 60529
Connection:	Boflex cable
Cable section:	4 x 0.25 mm²
	Ordering suffix -2187: 6 x 0.25 mm²
Operating principle:	magnetic
Actuating magnet:	EX-BPS 250, coded
S_{ao}:	4 mm
S_{ar}:	14 mm
Switching condition indication:	LED only with ordering suffix G
Max. switching voltage	
without LED:	24 VDC
with LED:	24 VDC
Max. switching current	
without LED:	100 mA
with LED:	10 mA
Max. switching capacity	
without LED:	1 W
with LED:	240 mW
Ambient temperature:	– 25 °C ... + 70 °C
Storage and transport temperature:	– 25 °C ... + 70 °C
Max. switching frequency:	5 Hz
Resistance to shock:	30 g / 11 ms
Resistance to vibration:	10 ... 55Hz, Amplitude 1 mm

Classification:

Standards:	EN ISO 13849-1
B_{10d} NC/NO contact:	25.000.000 at 20% contact load
Service life:	20 years

$$MTTF_d = \frac{B_{10d}}{0{,}1 \times n_{op}} \qquad n_{op} = \frac{d_{op} \times h_{op} \times 3600\ s/h}{t_{cycle}}$$

Contact variants

1 NO / 1 NC contacts

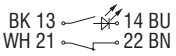

1 NO / 2 NC contacts

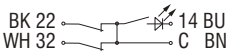

1 NO / 2 NC
(Ordering suffix -2187 without LED)

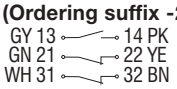

Ordering details

EX-BNS 250-①z②-③-3G/D

N°	Option	Description
①	11	1 NO / 1 NC contacts
	12	1 NO / 2 NC contacts
②		without LED
	G	with LED
③	2187	Individual contact outlet (only with 1 NO / 2 NC)

Note

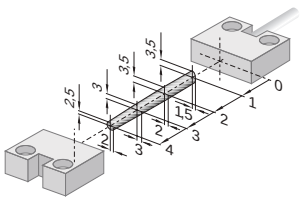

Enabling zone

The actuators for the magnetic safety sensors must be ordered separately.

Note

Contact symbols shown for the closed condition of the guard device.

The contact configuration for versions with or without LED is identical.

The LED is illuminated when the guard door is open.

в Беларуси Заказ г.Минск viber и тел.+375447584780 email: minsk17@tut.by

Safety sensors

System components

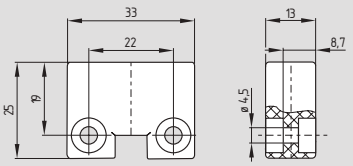

Actuating magnet EX-BPS 250

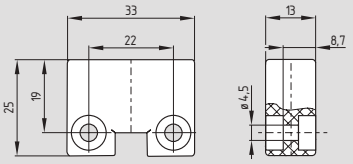

Spacer BNS 250

Ordering details

Actuating magnet	**EX-BPS 250**
Spacer	**BNS 250**

в Беларуси Заказ г.Минск viber и тел.+375447584780 email: minsk17@tut.by

EX-BNS 33-…-3G/D

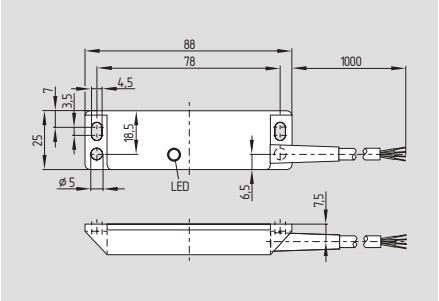

- Ex certified
- Thermoplastic enclosure
- with coding
- long life, no mechanical wear
- Protection class IP67
- Actuation only possible with EX-BPS 33
- Intensitive to transverse misalignment
- Concealed mounting possible
- Intensitive to soiling

Approvals

Technical data

Equipment category:	Ⓔx II 3GD
Explosion protection:	
EX-BNS 33:	Ex nC IIC T6 X
	Ex tD A22 IP67 T80°C X
EX-BPS 33:	c 80°C
Standards:	EN 60947-5-3, EN 61241-0, EN 61241-1, EN 60079-0, EN 60079-15, BG-GS-ET-14
Design:	rectangular
Enclosure:	glass-fibre reinforced thermoplastic
Max. impact energy:	1 J
Protection class:	IP67 to EN 60529
Connection:	Boflex cable
Cable section:	4 x 0.25 mm²
Ordering suffix ..-12-2187:	6 x 0.25 mm²
Operating principle:	magnetic
Actuating magnet:	EX-BPS 33, coded
S_{ao}:	5 mm
S_{ar}:	15 mm
Switching condition indication:	LED only with ordering suffix G
Max. switching voltage	
without LED:	100 VAC/DC
with LED:	24 VDC
Max. switching current	
without LED:	max. 400 mA
Ordering suffix -2187:	250 mA
with LED:	10 mA
Max. switching capacity	
without LED:	10 W
Ordering suffix ...-2187:	3 W
with LED:	240 mW
Ambient temperature:	– 25 °C … + 70 °C
Storage and transport temperature:	– 25 °C … + 70 °C
Repeat accuracy R:	≤ 0.1 x s_{ao}
Max. switching frequency:	ca. 5 Hz
Resistance to shock:	30 g / 11 ms
Resistance to vibration:	10 ... 55Hz, Amplitude 1 mm

Classification:

Standards:	EN ISO 13849-1
B_{10d} NC/NO contact:	25.000.000 at 20% contact load
Service life:	20 years

$$MTTF_d = \frac{B_{10d}}{0{,}1 \times n_{op}} \qquad n_{op} = \frac{d_{op} \times h_{op} \times 3600\ s/h}{t_{cycle}}$$

Contact variants

1 NO / 1 NC contacts

1 NO / 2 NC contacts

1 NO / 2 NC (Ordering suffix -2187)

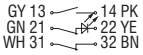

2 NC (Ordering suffix -2187)

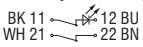

Ordering details

EX-BNS 33-①z②-③-3G/D

N°	Option	Description
①	11	1 NO / 1 NC contacts
	12	1 NO / 2 NC contacts
	02	2 NC contacts
②		without LED
	G	with LED
③	2187	Individual contact outlet (not possible for 1 NO/1 NC)

Note

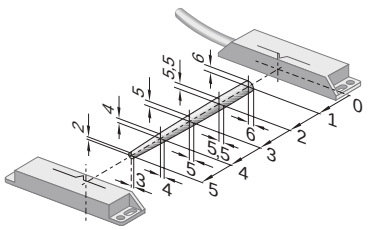

Enabling zone

The actuators for the magnetic safety sensors must be ordered separately.

Note

Contact symbols shown for the closed condition of the guard device.

The contact configuration for versions with or without LED is identical.

в Беларуси Заказ г.Минск viber и тел.+375447584780 email: minsk17@tut.by

Safety sensors

System components

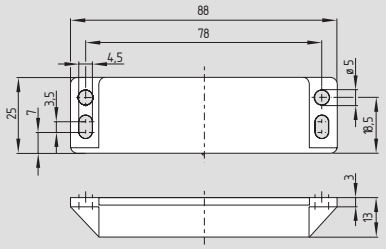

Actuating magnet EX-BPS 33

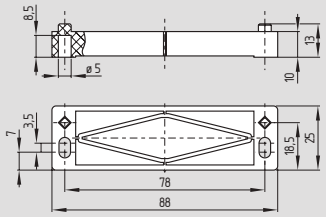

Spacer BN 31/BNS 33

Ordering details

Actuating magnet	**EX-BPS 33**
Spacer	**BN 31/BNS 33**

в Беларуси Заказ г.Минск viber и тел.+375447584780 email: minsk17@tut.by

EX-BNS 120-...-3G/D

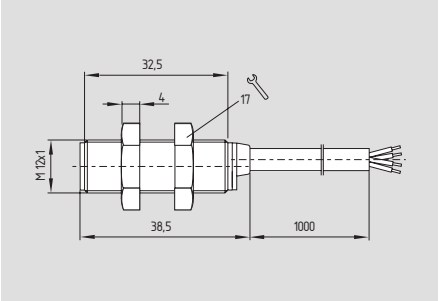

- Ex certified
- Thermoplastic enclosure
- long life, no mechanical wear
- Protection class IP67
- Intensitive to transverse misalignment
- Intensitive to soiling
- Particularly large switching distance
- Suitable for food processing industry

Technical data

Equipment category:	Ⓔx II 3GD
Ex protection:	Ex nC IIC T6 X Ex tD A22 IP67 T80°C X
Standards:	EN 60947-5-3, EN 61241-0, EN 61241-1, EN 60079-0, EN 60079-15, BG-GS-ET-14
Design:	cylindrical
Enclosure:	glass-fibre reinforced thermoplastic, tightening torque A/F 17 max. 90 Ncm
Max. impact energy:	1 J
Protection class:	IP67 to EN 60529
Connection:	Boflex cable
Cable section:	4 x 0.25 mm²
Operating principle:	magnetic
Actuating magnet:	BP 6, BP 8, BP 10, BP 15 SS, not coded
S_{ao}:	10 mm (BP 6 / BP 8) 20 mm (BP 10 / BP 15 SS)
S_{ar}:	22 mm (BP 6 / BP 8) 32 mm (BP 10 / BP 15 SS)
Switching condition indication:	–
Switching voltage max. :	100 VAC/DC
Switching current max. :	250 mA
Switching capacity max. :	02z: 3 W -11z, -12z: 5 W
Ambient temperature:	– 25 °C ... + 70 °C
Storage and transport temperature:	– 25 °C ... + 70 °C
Max. switching frequency:	5 Hz
Resistance to shock:	30 g / 11 ms
Resistance to vibration:	10 ... 55Hz, Amplitude 1 mm

Classification:

Standards:	EN ISO 13849-1
B_{10d} NC/NO contact:	25.000.000 at 20% contact load
Service life:	20 years

$$MTTF_d = \frac{B_{10d}}{0{,}1 \times n_{op}} \qquad n_{op} = \frac{d_{op} \times h_{op} \times 3600\ s/h}{t_{cycle}}$$

Contact variants

1 NO / 1 NC contacts

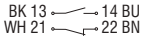

1 NO / 2 NC contacts

2 NC contacts

Approvals

Ⓔx CE

Ordering details

EX-BNS 120-①z-3G/D

N°	Option	Description
①	11	1 NO / 1 NC contacts
	12	1 NO / 2 NC contacts
	02	2 NC contacts

Note

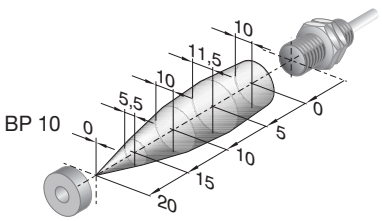

Enabling zone

The actuators for the magnetic safety sensors must be ordered separately.

Note

Contact symbols shown for the closed condition of the guard device.

The safety sensor is to be installed in such a way that operation with a magnet is not possible (covered installation in accordance with EN 1088).

в Беларуси Заказ г.Минск viber и тел.+375447584780 email: minsk17@tut.by

Safety sensors

System components

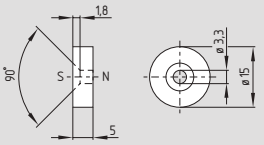

BP 6

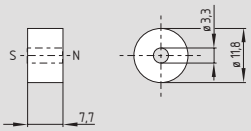

BP 8

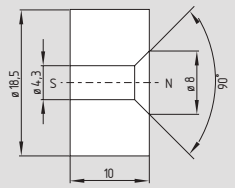

BP 10

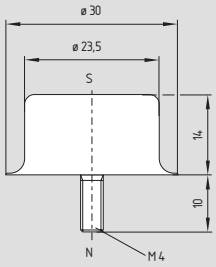

BP 15 SS

Ordering details

Actuating magnets:

unenclosed	**BP 6**
unenclosed	**BP 8**
unenclosed	**BP 10**
stainless steel	**BP 15 SS**

в Беларуси Заказ г.Минск viber и тел.+375447584780 email: minsk17@tut.by

EX-BNS 180-...-3G/D

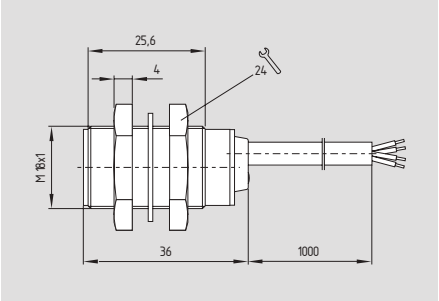

- Ex certified
- Thermoplastic enclosure
- long life, no mechanical wear
- Protection class IP67
- Intensitive to transverse misalignment
- Intensitive to soiling
- Particularly large switching distance
- Suitable for food processing industry

Approvals

Technical data

Equipment category:	II 3GD
Ex protection:	Ex nC IIC T6 X Ex tD A22 IP67 T80°C X
Standards:	EN 60947-5-3, EN 61241-0, EN 61241-1, EN 60079-0, EN 60079-15, BG-GS-ET-14
Design:	cylindrical
Enclosure:	glass-fibre reinforced thermoplastic, tightening torque A/F 24 max. 500 Ncm
Max. impact energy:	1 J
Protection class:	IP67 to EN 60529
Connection:	Boflex cable
Cable section:	6 x 0.25 mm²
Operating principle:	magnetic
Actuating magnet:	BP 6, BP 8, BP 10, BP 15 SS, not coded
S_{ao}:	8 mm (BP 6 / BP 8) 18 mm (BP 10 / BP 15 SS)
S_{ar}:	20 mm (BP 6 / BP 8) 28 mm (BP 10 / BP 15 SS)
Switching voltage max. without LED:	120 VAC/DC
Switching current:	max. 250 mA
Switching capacity:	max. 5 W
Ambient temperature:	– 25 °C ... + 70 °C
Storage and transport temperature:	– 25 °C ... + 70 °C
Max. switching frequency:	5 Hz
Resistance to shock:	30 g / 11 ms
Resistance to vibration:	10 ... 55Hz, Amplitude 1 mm

Classification:

Standards:	EN ISO 13849-1
B_{10d} NC/NO contact:	25.000.000 at 20% contact load
Service life:	20 years

$$MTTF_d = \frac{B_{10d}}{0{,}1 \times n_{op}} \qquad n_{op} = \frac{d_{op} \times h_{op} \times 3600\ s/h}{t_{cycle}}$$

Contact variants

1 NO / 2 NC contacts

GY 13 — 14 PK
GN 21 — 22 YE
WH 31 — 32 BN

Ordering details

EX-BNS 180-12z-2187-2-3G/D

Note

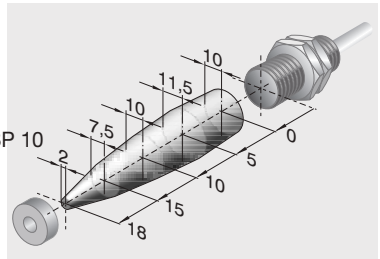

Enabling zone

The actuators for the magnetic safety sensors must be ordered separately.

Note

Contact symbols shown for the closed condition of the guard device.

The safety sensor is to be installed in such a way that operation with a magnet is not possible (covered installation in accordance with EN 1088).

в Беларуси Заказ г.Минск viber и тел.+375447584780 email: minsk17@tut.by

Safety sensors

System components

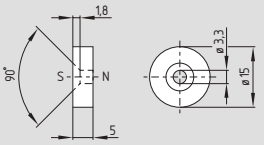

BP 6

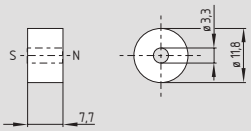

BP 8

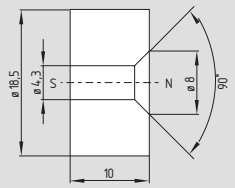

BP 10

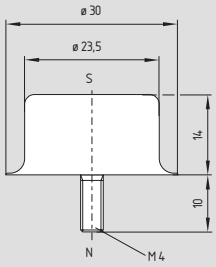

BP 15 SS

Ordering details

Actuating magnets:

unenclosed	**BP 6**
unenclosed	**BP 8**
unenclosed	**BP 10**
stainless steel	**BP 15 SS**

в Беларуси Заказ г.Минск viber и тел.+375447584780 email: minsk17@tut.by

EX-BNS 303-...-3G/D

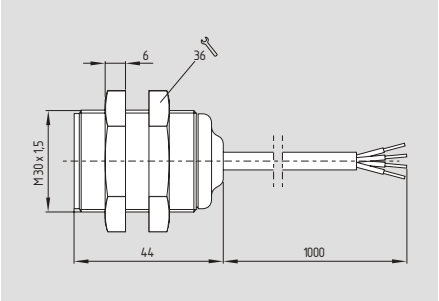

- Ex certified
- Thermoplastic enclosure
- with coding
- long life, no mechanical wear
- Protection class IP67
- Intensitive to transverse misalignment
- Intensitive to soiling
- Suitable for food processing industry
- LED version available

Approvals

Technical data

Equipment category:	II 3GD
Ex protection:	Ex nC IIC T6 X Ex tD A22 IP67 T80°C X
Standards:	EN 60947-5-3, EN 61241-0, EN 61241-1, EN 60079-0, EN 60079-15, BG-GS-ET-14
Design:	cylindrical
Enclosure:	glass-fibre reinforced thermoplastic, tightening force A/F 36 mm max. 300 Ncm
Max. impact energy:	1 J
Protection class:	IP67 to EN 60529
Connection:	Boflex cable
Cable section:	6 x 0.25 mm²
Operating principle:	magnetic
Actuating magnet:	BPS 300, BPS 303, BPS 303 SS, coded
S_{ao}:	5 mm
S_{ar}:	15 mm
Switching condition indication:	LED only with ordering suffix G
Max. switching voltage	
without LED:	max. 100 VAC/DC
with LED:	max. 24 VDC
Max. switching current	
without LED:	max. 400 mA
with LED:	10 mA
Max. switching capacity	
without LED:	10 W
with LED:	240 mW
Ambient temperature:	– 25 °C ... + 70 °C
Storage and transport temperature:	– 25 °C ... + 70 °C
Max. switching frequency:	5 Hz
Resistance to shock:	30 g / 11 ms
Resistance to vibration:	10 ... 55Hz, Amplitude 1 mm

Classification:

Standards:	EN ISO 13849-1
B_{10d} NC/NO contact:	25.000.000 at 20% contact load
Service life:	20 years

$$MTTF_d = \frac{B_{10d}}{0{,}1 \times n_{op}} \qquad n_{op} = \frac{d_{op} \times h_{op} \times 3600\ s/h}{t_{cycle}}$$

Contact variants

1 NO contacts
2 NC contacts

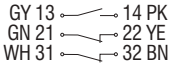

1 NO contacts
2 NC contacts with LED

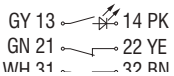

Ordering details

EX-BNS 303-12z①-2187-3G/D

N°	Option	Description
①		without LED
	G	with LED

Note

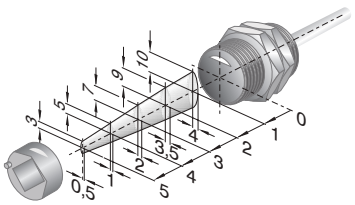

Enabling zone

The actuators for the magnetic safety sensors must be ordered separately.

Note

Contact symbols shown for the closed condition of the guard device.

The contact configuration for versions with or without LED is identical.

The LED is illuminated when the guard door is open.

в Беларуси Заказ г.Минск viber и тел.+375447584780 email: minsk17@tut.by

Safety sensors

System components

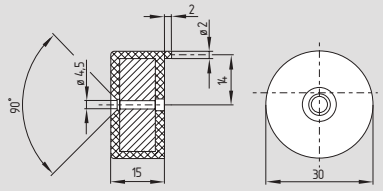

BPS 300

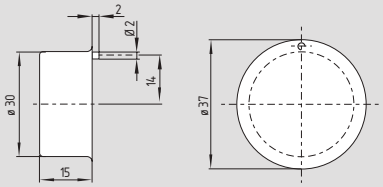

BPS 303

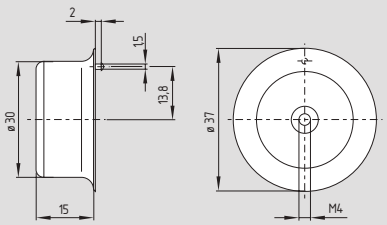

BPS 303 SS

Ordering details

Actuating magnet:	
with plastic enclosure	**BPS 300**
with plastic enclosure for food-processing industry	**BPS 303**
Stainless steel for food-processing industry	**BPS 303 SS**

в Беларуси Заказ г.Минск viber и тел.+375447584780 email: minsk17@tut.by

EX-CSS 180-...-3G/D

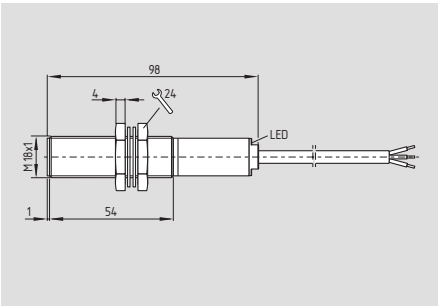

- Ex certified
- Thermoplastic enclosure
- Category 4 to EN 954-1
- Classification PDF-M to EN 60947-5-3
- Fit for SIL 3 applications to IEC 61508, PFH value < 6.1 x 10^{-9}
- Electronic contact-free, coded system
- Large switching distance
- Misaligned actuation possible
- High repeat accuracy of the switching points
- Self-monitored series-wiring of max. 16 sensors
- Max. length of the sensor chain 200 m
- Comfortable diagnostics through sensor LED and electronic signalling output
- Early warning when operating near the limit of the sensor's hysteris range
- 2 short-circuit proof PNP safety outputs (24 VDC per 500 mA)

Approvals

Technical data

Equipment category:	Ex II 3GD
Ex protection:	Ex nA IIC T6 X Ex tD A22 IP67 T70°C X
Standards:	EN 60947-5-3, EN 954-1, IEC 61508, EN 61241-0, EN 61241-1, EN 60079-0, EN 60079-15
Design:	cylindrical
Enclosure:	glass-fibre reinforced thermoplastic
Max. impact energy:	1 J
Protection class:	IP65 and IP67
Termination:	Cable
Cable section:	7 x 0.25 mm^2
Cable length:	max. 200 m
Operating principle:	inductive
Actuator:	CST-180-1, CST-180-2
Category:	4 to EN 954-1
Classification:	up to PDF-M to IEC 60947-5-3
SIL classification:	suitable for SIL 3 applications to IEC 61508, PFH < 6.1 x 10^{-9}
Rated switching distance S_n:	8 mm
S_{ao}:	7 mm
S_{ar}:	10 mm
Hysteresis:	≤ 0.7 mm
Repeat accuracy R:	≤ 0.2 mm
Response time:	< 30 ms
Duration of risk:	≤ 30 ms
U_e:	24 VDC – 15 % / + 10 %
I_e:	1.0 A
I_o:	0.05 A
Leakage current I_r:	≤ 0.5 mA
Protection class:	II
Overvoltage category:	III
Degree of pollution:	3
U_{imp}:	0.8 kV
U_i:	32 VAC/DC
Safety outputs:	short-circuit proof, p-type
Output current:	max. 0.5 A each output
U_d:	max. 0.5 V
I_e/U_e:	0.5 A / 24 VDC
Signalling output:	short-circuit proof, p-type
I_e/U_e:	0.05 A / 24 VDC
Utilisation category:	AC-12, DC-13
Ambient temperature:	– 20 °C ... + 40 °C
Storage and transport temperature:	– 25 °C ... + 85 °C
Switching frequency f:	ca. 3 Hz
Resistance to shock:	30 g / 11 ms
Resistance to vibration:	10 ... 55Hz, Amplitude 1 mm

System components

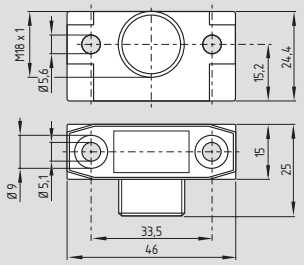

CST -180-1 actuator

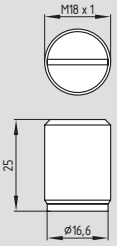

CST -180-2 actuator

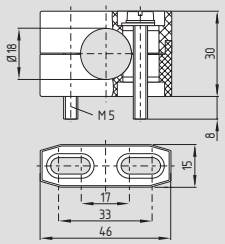

H 18 clamp

Ordering details

EX-CSS 8-180-2P+D-M-L-3G/D

Note

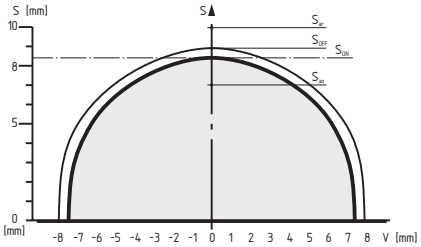

Legend

S	switching distance
V	axial misalignment
s_{on}	switch-on point
s_{off}	switch-off point
S_h	hysteresis range
S_{ao}	assured switch-on point
S_{ar}	Assured release point to EN 60947-5-3

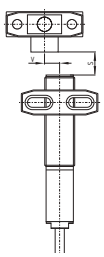

Ordering details

Actuator	**CST 180-1**
Actuator	**CST 180-2**
Clamp	**H 18**

Actuators must be ordered separately.

в Беларуси Заказ г.Минск viber и тел.+375447584780 email: minsk17@tut.by

Safety sensors

Connection

Sensor with multifunctional connection:
EX-CSS 8-180-2P+D-M-L-3G/D

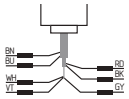

Connecting cable:
2 m length;
cable section 7 poles: 7 x 0.25 mm^2

Wiring

Lead colours Connecting cable	Wiring
BN (brown)	A1 Ue
BU (blue)	A2 GND
VT (violet)	X1 Safety input 1
WH (white)	X2 Safety input 2
BK (black)	Y1 Safety output 1
RD (red)	Y2 Safety output 2
GY (grey)	Signalling output

Safety-monitoring module

Requirements for the safety monitoring module
2-channel p-type safety input. The safety monitoring module must tolerate internal functional tests of the sensors in milliseconds (max. 2 ms).

A range of suitable **safety monitoring modules** for these applications can be found in the „Electronic Safety Sensors and Solenoid Interlocks“ brochure.

Note

- Series-wiring of sensors:
  16 self-monitoring CSS 180 safety sensors can be wired in series without loss of control category 4 to EN 954-1. The redundant output of the first sensor is wired into the input of the next sensor.
- The voltage drop over a long sensor chain should be taken into account when planning cable routing. It depends on several factors which are operating voltage, cable length, ambient temperature, number of sensors series connected, and input load of the safety control monitor.

в Беларуси Заказ г.Минск viber и тел.+375447584780 email: minsk17@tut.by

Ordering details

Detailed technical information at:
www.schmersal.com

в Беларуси Заказ г.Минск viber и тел.+375447584780 email: minsk17@tut.by

Magnetic reed switches

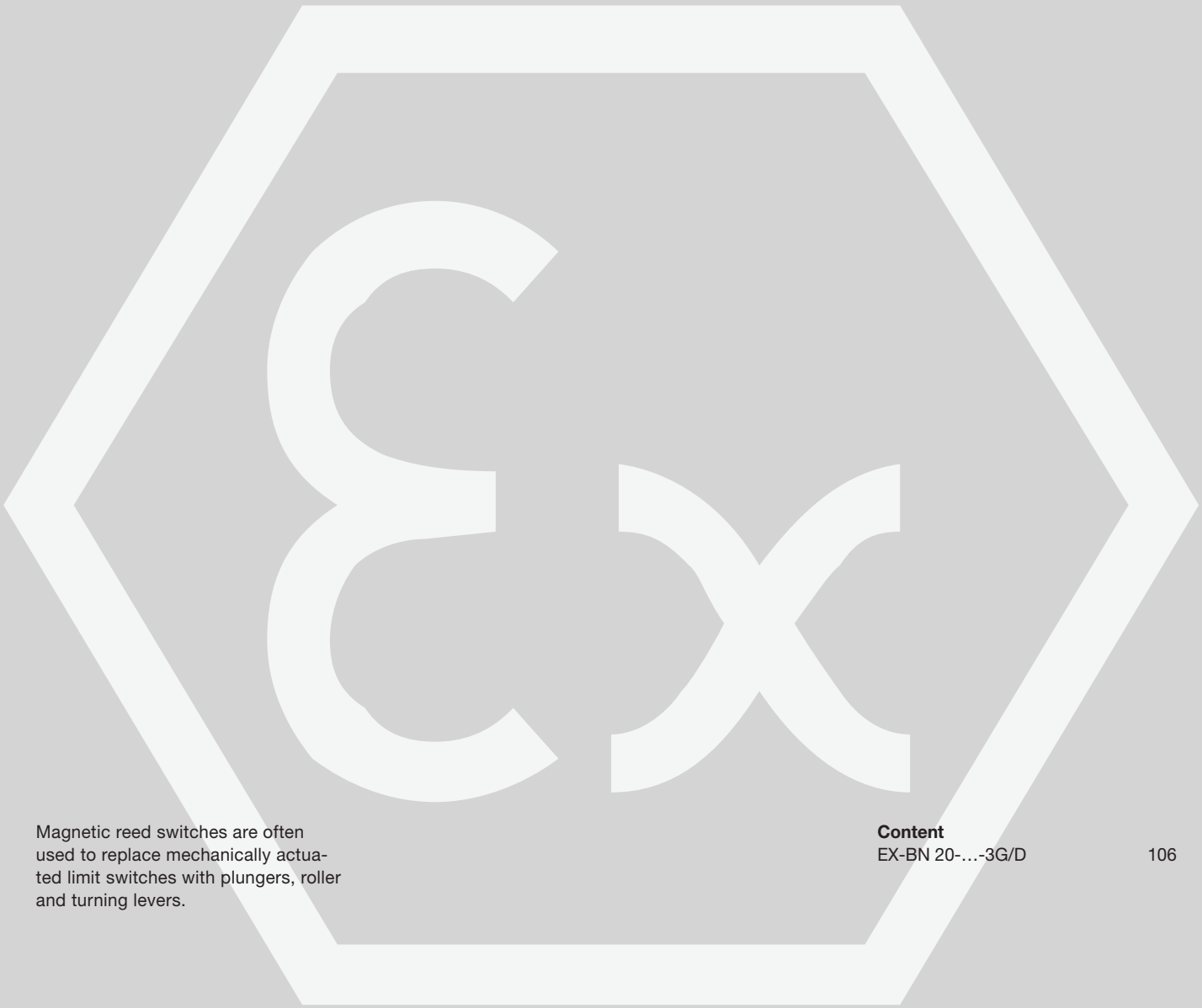

Magnetic reed switches are often used to replace mechanically actuated limit switches with plungers, roller and turning levers.

Content

EX-BN 20-…-3G/D 106

в Беларуси Заказ г.Минск viber и тел.+375447584780 email: minsk17@tut.by

Magnetic reed switches

EX-BN 20-...-3G/D

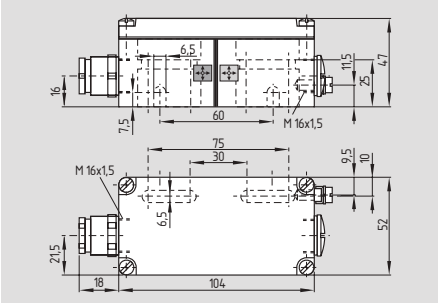

- Ex certified
- Aluminium enlosure
- Long life
- Non-contact principle
- 1 Reed contact
- Particularly resistant to vibration
- Available for actuation from front or side
- Actuating distance up to 50 mm depending on actuating magnet and version
- Screw connection
- Protection class IP67
- 2 cable entries M 16
- Including Ex-certified screwed cable gland

Technical data

Equipment category:	⟨Ex⟩ II 3GD
Ex protection:	Ex nC IIC T5 X Ex tD A22 IP67 T90°C X
Standards:	EN 61241-0, EN 61241-1, EN 60079-0, EN 60079-15
Enclosure:	Al Si12 die-casting, painted
Max. impact energy:	4 J
Protection class:	IP67 to EN 60529
Connection:	screw terminals
cable entry:	2x M16
Operating principle:	magnetic
Switching voltage:	max. 250 VAC/DC
Switching current:	max. 3 A
Switching capacity:	max. 120 VA/W
Dielectric strength:	> 600 VAC (50 Hz)
Switching speed:	max. 18 m/s
Switching frequency:	max. 300 S/s
Switching time	
"Close":	0.3 ms ... 1.5 ms
"Open":	max. 0.5 ms
Bounce duration:	0.3 ms ... 0.6 ms
Ambient temperature:	– 15 °C ... + 70 °C
Storage temperature:	– 25 °C ... + 70 °C
Mechanical life:	10^8 operations
Electrical life:	1 million - 1 billion operations, depending on load
Resistance to vibration:	50 g on sine wave oscillation
Switching point accuracy:	± 0.25 mm, T = constant
Resistance to shock:	30 g / 11 ms
Resistance to vibration:	10 ... 55 Hz Amplitude 1 mm
Cable cross-section of the cable glands:	min. Ø 6 mm max. Ø 10 mm

Switching distances, refer to next page.

Contact variants

1 NO contact EX -BN 20 - 10 z
1 NC contact EX - BN 20-01z
with N -S actuating magnet BP 2

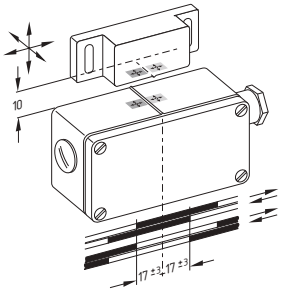

1 bistable contact EX-BN 20-rz
with N actuating magnet BP 20N

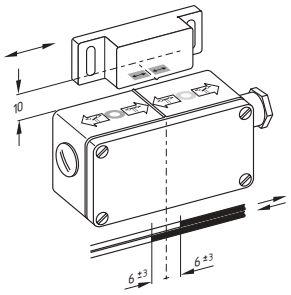

1 bistable contact EX-BN 20-rz
with S actuating magnet BP 20S

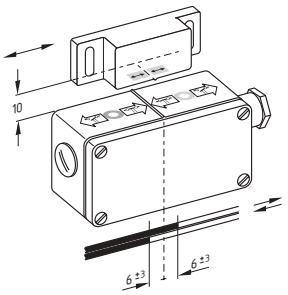

Approvals

⟨Ex⟩ CE

Ordering details

EX-BN 20-①Z-3G/D

N°	Insert	Description
①	01	1 NC contacts
	02	2 NC contacts
	10	1 NO contacts
	20	2 NO contacts
	11	1 NC / 1 NO contact
	R	1 bistable contact
	2R	2 bistable contact
	11R	2 bistable contact 1 NC / 1 NO

Note

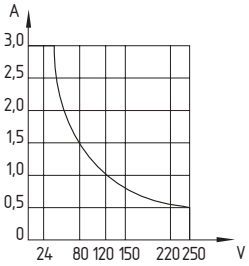

Switching capacity

Note

In version -10 and -01: When the switches and actuators come together, the colours must coincide: Red (S) to red (S) and green (N) to green (N).

The actuators for the magnetic safety sensors must be ordered separately.

On the next pages, a range of suitable actuating magnets is presented.

в Беларуси Заказ г.Минск viber и тел.+375447584780 email: minsk17@tut.by

Magnetic reed switches

Switch distances

Actuating magnet	EX-BN 20-10z EX-BN 20-20z EX-BN 20-01z EX-BN 20-02z EX-BN 20-11z	EX-BN 20-rz EX-BN 20-2rz EX-BN 20-11rz
BP 10 N		5
BP 10 S		5
2 x BP 10	12	
2 x BP 10 N		10
2 x BP 10 S		10
BP 15 N		7
BP 15 S		7
2 x BP 15/2	12	
2 x BP 15/2 N		15
2 x BP 15/2 S		15
BP 34 N		10-25
BP 34 S		10-25
BP 20	15	
BP 20 N		15
BP 20 S		15
BP 31	15	
BP 31 N		15
BP 31 S		15
BP 11	15	
BP 11 N		5
BP 11 S		5
2 x BP 11 N		15
2 x BP 11 S		15
BP 12	25	
BP 12 N		10
BP 12 S		10
2 x BP 12 N		5-20
2 x BP 12 S		5-20
BP 21	20-45	
BP 21 N		10-35
BP 21 S		10-35
2 x BP 21 N		15-50
2 x BP 21 S		15-50

System components

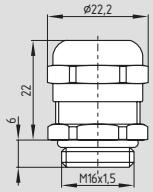

EX-certified screwed cable gland

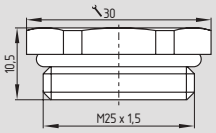

EX-certified screw plug

Ordering details

EX-certified screwed cable gland	**EX-KLE-M16x1.5**
EX-certified screw plug	**EX-VS-M16x1.5**

в Беларуси Заказ г.Минск viber и тел.+375447584780 email: minsk17@tut.by

Magnetic reed switches

System components

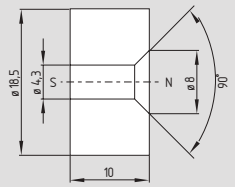

BP 10

System components

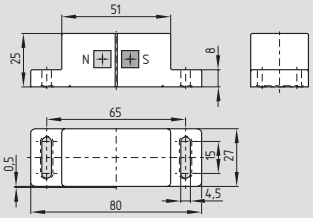

BP 20

System components

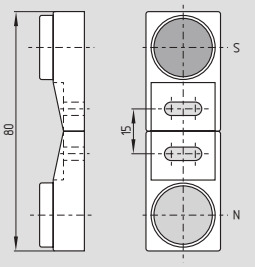

BP 11

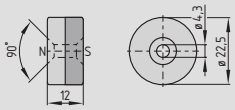

BP 15

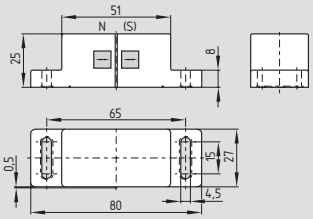

BP 20 N / BP 20 S

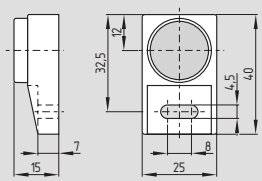

BP 11 N / BP 11 S

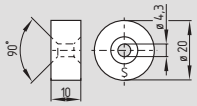

BP 15/2

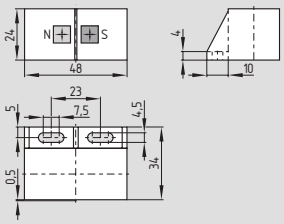

BP 31

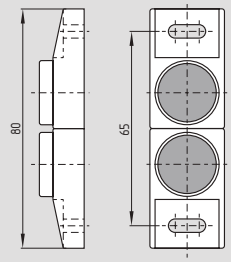

2x BP 11 N / 2x BP 11 S

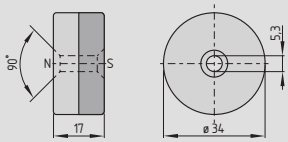

BP 34

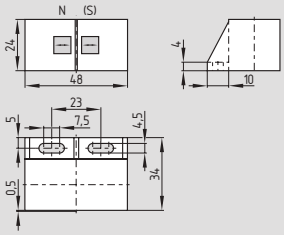

BP 31 N / BP 31 S

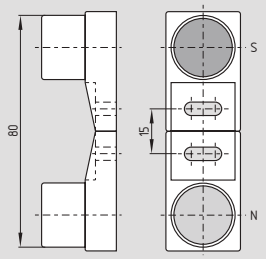

BP 12

Ordering details

Actuating magnet	
Unenclosed, N-S	**BP 10**
Thermoplastic enclosure, N-S	**BP 15**
Unenclosed, N-S	**BP 15/2**
Thermoplastic enclosure, N-S	**BP 34**

Ordering details

Actuating magnet	
metal enclosure Al, N-S	**BP 20**
metal enclosure Al, N	**BP 20 N**
metal enclosure Al, S	**BP 20 S**
Thermoplastic enclosure, N-S	**BP 31**
Thermoplastic enclosure, N-S	**BP 31 N**
Thermoplastic enclosure, N-S	**BP 31 S**

Ordering details

Actuating magnet	
metal enclosure Al, N-S	**BP 11**
metal enclosure Al, N	**BP 11 N**
metal enclosure Al, S	**BP 11 S**
metal enclosure Al, 2x N	**2x BP 11 N**
metal enclosure Al, 2x S	**2x BP 11 S**
metal enclosure Al, N-S	**BP 12**

в Беларуси Заказ г.Минск viber и тел.+375447584780 email: minsk17@tut.by

Magnetic reed switches

System components

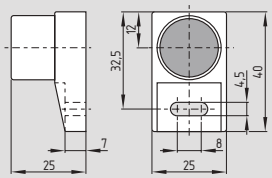

BP 12 N / BP 12 S

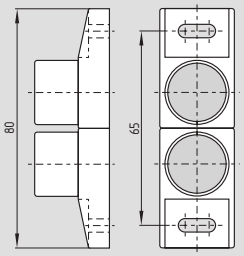

2x BP 12 N / 2x BP 12 S

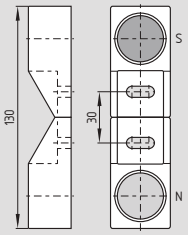

BP 21

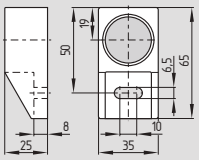

BP 21 N / BP 21 S

System components

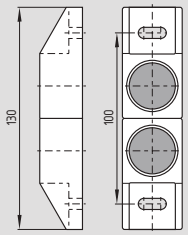

2x BP 21 N / 2x BP 21 S

Ordering details

Actuating magnet	
metal enclosure Al, N	**BP 12 N**
metal enclosure Al, S	**BP 12 S**
metal enclosure Al, 2x N	**2x BP 12 N**
metal enclosure Al, 2x S	**2x BP 12 S**
metal enclosure Al, N-S	**BP 21**
metal enclosure Al, N	**BP 21 N**
metal enclosure Al, S	**BP 21 S**

Ordering details

Actuating magnet	
metal enclosure Al, 2x N	**2x BP 21 N**
metal enclosure Al, 2x S	**2x BP 21 S**

в Беларуси Заказ г.Минск viber и тел.+375447584780 email: minsk17@tut.by

Ordering details

Detailed technical information at:
www.schmersal.com

в Беларуси Заказ г.Минск viber и тел.+375447584780 email: minsk17@tut.by

Control devices and indicator lights

The entire EX-R programme has a modular structure. Each control device \and allows a great diversity of variants: various versions of push-buttons and illuminated buttons, indicator lights, emergency-stop buttons, selector switches and key-operated selector switches are available.

Content

EX-RDT...	114
EX-RDM...	114
EX-RDL...	115
EX-RDLM...	115
EX-RMLH...	116
EX-RDP40...	117
EX-RDRZ45...	118
EX-RDRZ45rt	119
EX-RW...21/32	120
EX-RW...21.1/32.1	120
EX-RS...	122
EX-RF 10...	124
EX-RF 03...	124
EX-RLDE ws 24	125
EX-EBG 311.O	126
EX-EBG 633.O	126
EX-EBG 665.O	126

в Беларуси Заказ г.Минск viber и тел.+375447584780 email: minsk17@tut.by

Control devices and indicator lights

General description

Concept
With the development of the new programme of 22 mm Ex control devices and indicator lights, Elan provides the user with a state-of-the-art switchgear concept that is compliant to EN 61241 and EN 60 079, featuring additional device functionality, reliability and spatial use beyond the usual standard. The EX-RF/RLDE contact and light element system makes a special contribution here.
Well-tried and proven features and material from earlier Elan designs (metal front parts, caps in high-quality shock-proof thermoplastic) have been retained and improved.

The equipment is suitable for the Ex category II 2GD. The explosion protection or the type of protection of the devices is:
• Ex ib IIC T4 X
• Ex tD A21 IP65 T110°C X

Control devices and indicator light heads
A large diversity of fully insulated pushbuttons/impact buttons/illuminated buttons/pivoting pushbuttons etc. is offered. The front part of the actuating head is in chrome-plated brass. The programme is characterised by large actuating surfaces of at least 28 mm. The material of the button is brass-coated. The caps or lens covers of the illuminated pushbuttons and indicator lights are in shock-proof thermoplastic. In addition to the high mechanical strength, this material selection permits a more than average degree of resistance to heat and chemical effects.

Protection class
The front seal of these devices corresponds to protection class IP65 to EN DIN 60 529. The design features of the device sealing guarantee the maximum of protection over a long period of time, even in extreme conditions.

Mechanical protection
Mechanical tests are carried out in accordance with EN 60079-0. The enclosures or the exterior part of the enclosure, pushbuttons must withstand a high impact energy.

Programme structure
A control and indicator device consists of an actuator, a mounting flange and a contact or light element. The type designation of this type series starts with EX-R..., e. g. EX-RDT for a pushbutton. The mounting flange (divided into two, type EX-RLM) is included in the delivery of the device heads, both for the operating and the display elements.

Per control device, a maximum of 2 contact elements is provided.

One-hole fixing
The devices are designed for mounting holes of 22.3 mm + 0.4 mm according to DIN EN 60 947-5-1 Pt. 6.3.1. An additional cut-out to prevent rotation is not required.

Spacing
It is possible to install several devices with minimum dimensions in the following way:

Minimum distance between the mounting holes to DIN EN 60 947-5-1:
• horizontal: 40 mm
• vertical: 50 mm

Exceptions:
Selector switches/pushbuttons with long knob, emergency stop buttons EX-RDRZ45...:
• horizontal: 50 mm
• vertical: 60 mm

Mechanical protection to EN 60 079-0

Risk of mechanical hazard	High		Low	
Group	**I**	**II**	**I**	**II**
Enclosure and external accessible parts of the enclosure	20 Nm	7 Nm	7 Nm	4 Nm
Translucent parts without safety guard	7 Nm	4 Nm	4 Nm	2 Nm
	No further protective measures required		Mechanical protected fitting	

в Беларуси Заказ г.Минск viber и тел.+375447584780 email: minsk17@tut.by

Assembly schematic

Pushbutton

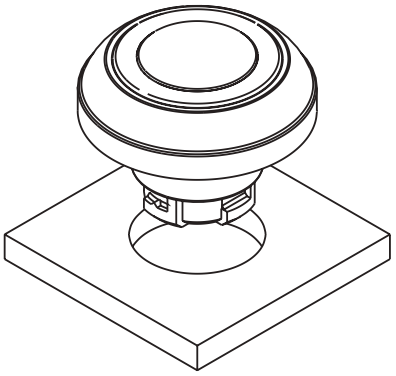

Fixing flange

Mounting flange

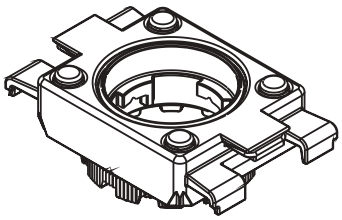

Contact carrier with contact lugs and 2 plunger elements

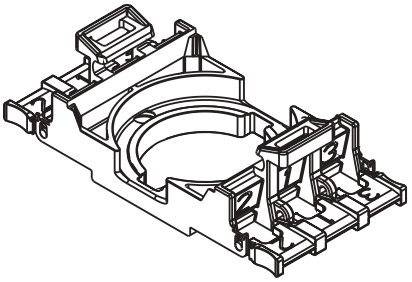

Light element with integrated multi-LED

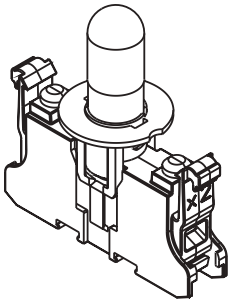

Contact elements

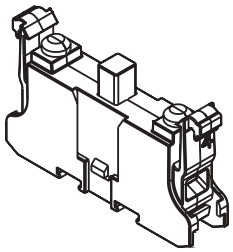

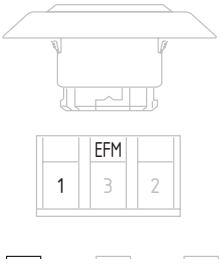

в Беларуси Заказ г.Минск viber и тел.+375447584780 email: minsk17@tut.by

EX-RDT...

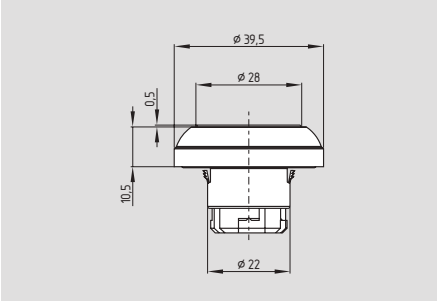

• Pushbutton

EX-RDM...

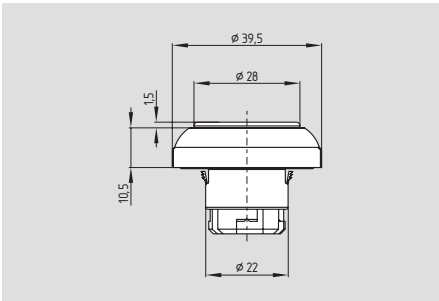

• Pushbutton with membrane

Technical data

Equipment category:	Ⓔx II 2GD
Ex protection:	Ex ib IIC T4 X Ex tD A21 IP65 T110°C X
Standards:	EN 60947-5-1, EN 60947-1, EN 61241-0, EN 61241-1, EN 60079-0, EN 60079-11
Max. impact energy (EN 60079-0):	7 J
Design:	round
Installation-ø:	22.3 mm
Grid dimensions:	40 × 50 mm
Front plate thickness:	1 … 6 mm
Mounting position:	random
Designation:	identification plates, symbols
Climatic resistance to DIN EN 60068:	Part 2-30
Ambient temperature:	–20 °C … + 55 °C
Switching frequency:	1,000 s/h
Protection class to EN 60529:	IP65
Full insulation	yes
Materials:	
Membranes:	PC (good resistance to chemical agents)
Front ring/buttons:	chrome-plated brass, powder-coated brass
Fixing:	with mounting flange
Max. tightening torque:	2 Nm
Resistance to shocks to EN 60068-2-27:	< 50 g
Resistance to vibrations to EN 60068-2-6:	5 g
Actuating stroke:	4 mm
Actuating force:	without membrane approx. 1.5 N with membrane approx. 2 N
Mechanical life:	1×10^6 operations
Rohs conformity:	yes

Approvals

Ⓔx CE

Ordering details

Ex-RDT ① ②

N°	Option	Description
①	bk	black
	ye	yellow
	rd	red
	gn	green
	wh	white
	bu	blue
②	Identification plate, symbols: refer to page 128	

Approvals

Ⓔx CE

Ordering details

Ex-RDM ① ②

N°	Option	Description
①	bk	black
	ye	yellow
	rd	red
	gn	green
	wh	white
	bu	blue
②	Identification plate, symbols: refer to page 128	

Note

The EX-RLM fixing flange, consisting of mounting flange, contact carrier with contact lugs and 2 plunger elements, is not included in the delivery of the device heads
(refer to page127)

в Беларуси Заказ г.Минск viber и тел.+375447584780 email: minsk17@tut.by

Control devices and indicator lights – Illuminated pushbuttons

EX-RDL...

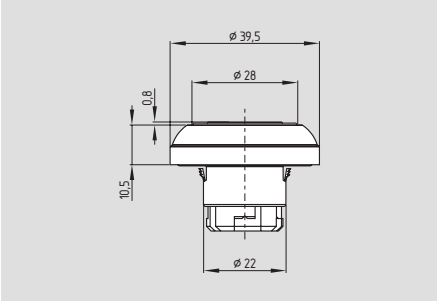

• Illuminated pushbutton

EX-RDLM...

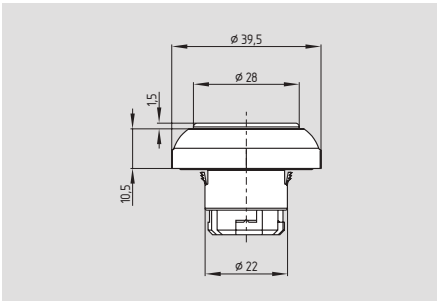

• Illuminated pushbutton with membrane

Technical data

Equipment category:	Ⓔx II 2GD
Ex protection:	Ex ib IIC T4 X Ex tD A21 IP65 T110°C X
Standards:	EN 60947-5-1, EN 60947-1, EN 61241-0, EN 61241-1, EN 60079-0, EN 60079-11
Max. impact energy:	4 J
Design:	round
Installation-ø:	22.3 mm
Grid dimensions:	40 × 50 mm
Front plate thickness:	1 … 6 mm
Mounting position:	random
Designation:	identification plates, symbols
Climatic resistance to DIN EN 60068:	Part 2-30
Ambient temperature:	–20 °C … + 55 °C
Switching frequency:	1,000 s/h
Protection class to EN 60529:	IP65
Full insulation	yes
Materials:	
Membranes:	PC (good resistance to chemical agents)
Front ring/buttons:	chrome-plated brass, powder-coated brass
Fixing:	with mounting flange
Max. tightening torque:	2 Nm
Resistance to shocks to EN 60068-2-27:	< 50 g
Resistance to vibrations to EN 60068-2-6:	5 g
Actuating stroke:	4 mm
Actuating force:	ca. 1.5 N
Mechanical life:	1×10^6 operations
Rohs conformity:	yes

Approvals

Ⓔx CE

Ordering details

Ex-RDL ① ②

N°	Option	Description
①	bk	black
	ye	yellow
	rd	red
	gn	green
	wh	white
	bu	blue
②	Identification plate, symbols: refer to page 128	

Approvals

Ⓔx CE

Ordering details

Ex-RDLM ① ②

N°	Option	Description
①	bk	black
	ye	yellow
	rd	red
	gn	green
	wh	white
	bu	blue
②	Identification plate, symbols: refer to page 128	

Note

The EX-RLM fixing flange, consisting of mounting flange, contact carrier with contact lugs and 2 plunger elements, is not included in the delivery of the device heads
(refer to page127)

в Беларуси Заказ г.Минск viber и тел.+375447584780 email: minsk17@tut.by

EX-RMLH...

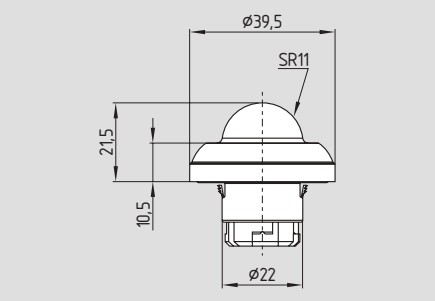

• Indicator light with domed cap

Technical data

Equipment category:	⟨Ex⟩ II 2GD
Ex protection:	Ex ib IIC T4 X Ex tD A21 IP65 T110°C X
Standards:	EN 60947-5-1, EN 60947-1, EN 61241-0, EN 61241-1, EN 60079-0, EN 60079-11
Max. impact energy:	4 J
Design:	round
Installation-ø:	22.3 mm
Grid dimensions:	40 × 50 mm
Front plate thickness:	1 ... 6 mm
Mounting position:	random
Designation:	identification plates, symbols
Climatic resistance to DIN EN 60068:	Part 2-30
Ambient temperature:	–20 °C ... + 55 °C
Protection class to EN 60529:	IP65
Full insulation	yes
Materials:	
Lens covers	PC (good resistance to chemical agents)
Front ring/buttons:	chrome-plated brass, powder-coated brass
Fixing:	with mounting flange
Max. tightening torque:	2 Nm
Resistance to shocks to EN 60068-2-27:	< 50 g
Resistance to vibrations to EN 60068-2-6:	5 g
Rohs conformity:	yes

Approvals

⟨Ex⟩ CE

Ordering details

Ex-RMLH ① ②

N°	Option	Description
①	ye	yellow
	rd	red
	gn	green
	wh	white
	bu	blue
②	Identification plate, symbols: refer to page 128	

Note

The EX-RLM fixing flange, consisting of mounting flange, contact carrier with contact lugs and 2 plunger elements, is not included in the delivery of the device heads
(refer to page127)

в Беларуси Заказ г.Минск viber и тел.+375447584780 email: minsk17@tut.by

EX-RDP40...

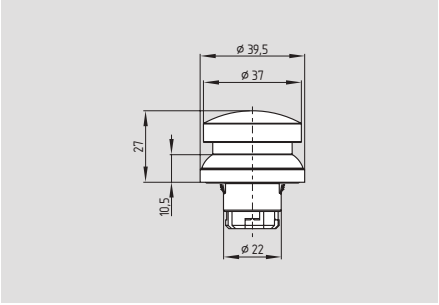

• Mushroom button without latching function

Technical data

Equipment category:	⟨Ex⟩ II 2GD
Ex protection:	Ex ib IIC T4 X Ex tD A21 IP65 T110°C X
Standards:	EN 60947-5-1, EN 60947-1, EN 61241-0, EN 61241-1, EN 60079-0, EN 60079-11
Max. impact energy:	4 J
Design:	round
Installation-ø:	22.3 mm
Grid dimensions:	50 × 60 mm
Front plate thickness:	1 … 6 mm
Mounting position:	random
Designation:	identification plates, symbols
Climatic resistance to DIN EN 60068:	Part 2-30
Ambient temperature:	–20 °C … + 55 °C
Switching frequency:	1,000 s/h
Protection class to EN 60529:	IP65
Full insulation	yes
Materials:	
Front ring/buttons:	chrome-plated brass, powder-coated brass
Fixing:	with mounting flange
Max. tightening torque:	2 Nm
Resistance to shocks to EN 60068-2-27:	< 50 g
Resistance to vibrations to EN 60068-2-6:	5 g
Actuating stroke:	4 mm
Actuating force:	approx. 2 N
Mechanical life:	1×10^6 operations
Rohs conformity:	yes

Approvals

⟨Ex⟩ CE

Ordering details

Ex-RDP40 ① ②

N°	Option	Description
①	bk	black
	ye	yellow
	rd	red
	gn	green
	wh	white
	bu	blue
②	Identification plate, symbols: refer to page 128	

Note

The EX-RLM fixing flange, consisting of mounting flange, contact carrier with contact lugs and 2 plunger elements, is not included in the delivery of the device heads
(refer to page127)

в Беларуси Заказ г.Минск viber и тел.+375447584780 email: minsk17@tut.by

EX-RDRZ45...

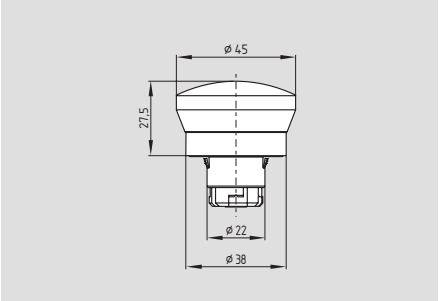

• Mushroom button with latching function

Technical data

Equipment category:	⟨Ex⟩ II 2GD
Ex protection:	Ex ib IIC T4 X Ex tD A21 IP65 T110°C X
Standards:	EN 60947-5-1, EN 60947-1, EN 61241-0, EN 61241-1, EN 60079-0, EN 60079-11
Max. impact energy:	4 J
Design:	round
Installation-ø:	22.3 mm
Grid dimensions:	50 × 60 mm
Front plate thickness:	1 ... 6 mm
Mounting position:	random
Climatic resistance to DIN EN 60068:	Part 2-30
Ambient temperature:	–20 °C ... + 55 °C
Switching frequency:	600 s/h
Protection class to EN 60529:	IP65
Full insulation	yes
Materials:	
Front ring/buttons:	chrome-plated brass, powder-coated brass
Fixing:	with mounting flange
Max. tightening torque:	2 Nm
Resistance to shocks to EN 60068-2-27:	< 50 g
Resistance to vibrations to EN 60068-2-6:	5 g
Actuating stroke:	5 mm
Actuating force:	approx. 2 N
Mechanical life:	1 × 10^5 operations
Rohs conformity:	yes

Approvals

⟨Ex⟩ CE

Ordering details

Ex-RDRZ45 ① ②

N°	Option	Description
①	bk	black
	ye	yellow
	gn	green
②	Identification plate, symbols: refer to page 128	

Note

The EX-RLM fixing flange, consisting of mounting flange, contact carrier with contact lugs and 2 plunger elements, is not included in the delivery of the device heads
(refer to page127)

в Беларуси Заказ г.Минск viber и тел.+375447584780 email: minsk17@tut.by

EX-RDRZ45rt

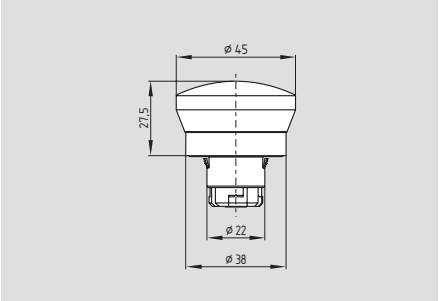

• Emergency stop button to ISO 13850, 2006

Technical data

Equipment category:	⟨Ex⟩ II 2GD
Ex protection:	Ex ib IIC T4 X
	Ex tD A21 IP65 T110°C X
Standards:	EN 60947-5-1; EN 60947-5-5
	EN 60947-1; EN 61241-1
	EN 60079-0; EN 60079-11
Max. impact energy:	4 J
Design:	round
Installation-ø:	22.3 mm
Grid dimensions:	50 × 60 mm
Front plate thickness:	1 ... 6 mm
Mounting position:	random
Climatic resistance to DIN EN 60068:	Part 2-30
Ambient temperature:	–20 °C ... + 55 °C
Switching frequency:	600 s/h
Protection class to EN 60529:	IP65
Full insulation	yes
Materials:	
Front ring/buttons:	chrome-plated brass, powder-coated brass
Fixing:	with mounting flange
Max. tightening torque:	2 Nm
Resistance to shocks to EN 60068-2-27:	< 50 g
Resistance to vibrations to EN 60068-2-6:	5 g
Actuating stroke:	5 mm
Actuating force:	approx. 2 N
Mechanical life:	1×10^5 operations
Rohs conformity:	yes

Approvals

⟨Ex⟩ CE

Ordering details

Ex-RDRZ45 rt

Note

The EX-RLM fixing flange, consisting of mounting flange, contact carrier with contact lugs and 2 plunger elements, is not included in the delivery of the device heads
(refer to page127)

в Беларуси Заказ г.Минск viber и тел.+375447584780 email: minsk17@tut.by

EX-RW...21/32

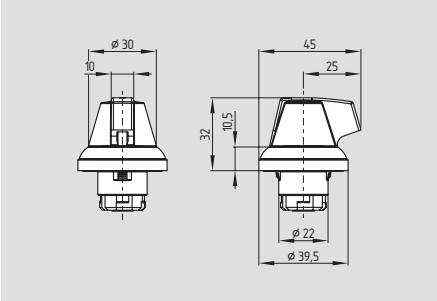

- Maintained selector switch, spring return selector switch with short knob
- 2 or 3 positions

EX-RW...21.1/32.1

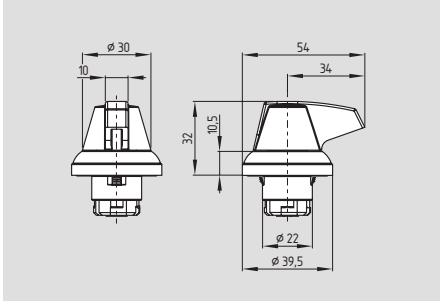

- Maintained selector switch, spring return selector switch with long knob
- 2 or 3 positions

Technical data

Equipment category:	⟨Ex⟩ II 2GD
Ex protection:	Ex ib IIC T4 X Ex tD A21 IP65 T110°C X
Standards:	EN 60947-5-1, EN 60947-1, EN 61241-0, EN 61241-1, EN 60079-0, EN 60079-11
Max. impact energy:	4 J
Design:	round
Installation-ø:	22.3 mm
Grid dimensions:	50 × 60 mm
Front plate thickness:	1 … 6 mm
Mounting position:	random
Designation:	identification plates, symbols
Climatic resistance to DIN EN 60068:	Part 2-30
Ambient temperature:	0 °C … + 55 °C
Switching frequency:	1,000 s/h
Protection class to EN 60529:	IP65
Full insulation	yes
Materials:	
Knob:	PC (good resistance to chemical agents)
Front ring/buttons:	chrome-plated brass, powder-coated brass
Fixing:	with mounting flange
Max. tightening torque:	2 Nm
Resistance to shocks to EN 60068-2-27:	< 50 g
Resistance to vibrations to EN 60068-2-6:	5 g
Actuating stroke:	6 mm
Actuating force:	approx. 0.2 N
Mechanical life:	3×10^5 operations
Rohs conformity:	yes

Approvals

⟨Ex⟩ CE

Ordering details

Ex-RW① ②

N°	Option	Description
①	T	Selector switch
	S	Selector switch
	ST	Spring-return rotary selector switch
	TS	Maintained spring-return rotary selector switch
②	21	2 positions
	32	3 positions

Approvals

⟨Ex⟩ CE

Ordering details

Ex-RW① ②.1

N°	Option	Description
①	T	Selector switch
	S	Selector switch
	ST	Spring-return rotary selector switch
	TS	Maintained spring-return rotary selector switch
②	21	2 positions
	32	3 positions

Note

The EX-RLM fixing flange, consisting of mounting flange, contact carrier with contact lugs and 2 plunger elements, is not included in the delivery of the device heads
(refer to page127)

в Беларуси Заказ г.Минск viber и тел.+375447584780 email: minsk17@tut.by

Control devices and indicator lights

Brief description	Switching angle		Type
Spring-return rotary selector switch with 2 positions	1 × 55°	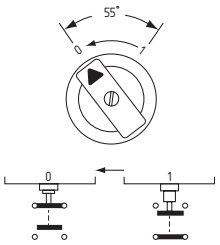	Ex-RWT 21 Ex-RWT 21.1
Selector switch with 2 latched positions	1 × 70°	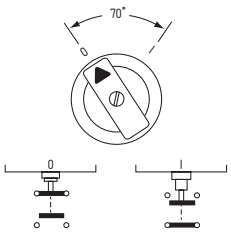	Ex-RWS 21 Ex-RWS 21.1
Maintained spring-return rotary selector switch with 3 positions	2 × 35°	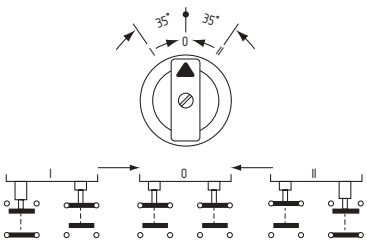	Ex-RWT 32 Ex-RWT 32.1
Selector switch with 3 positions; right: latching, left: switching	right 35 left 55°	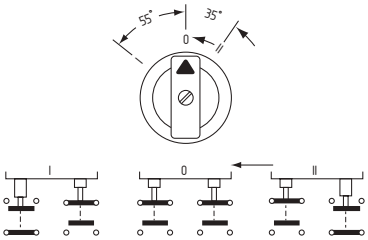	Ex-RWST 32 Ex-RWST 32.1
Maintained spring-return rotary selector switch with 3 positions	2 × 55°	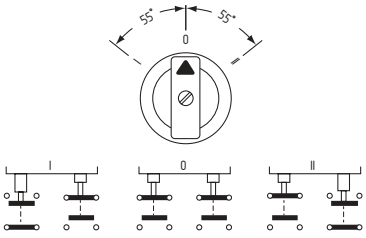	Ex-RWS 32 Ex-RWS 32.1
Maintained spring-return rotary selector switch with 3 positions, right: switching, left: latching	right 55 left 35°	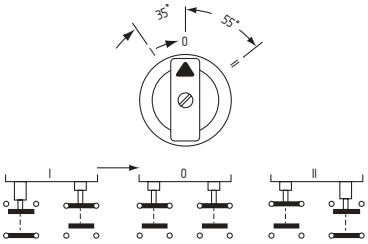	Ex-RWTS 32 Ex-RWTS 32.1

в Беларуси Заказ г.Минск viber и тел.+375447584780 email: minsk17@tut.by

EX-RS...

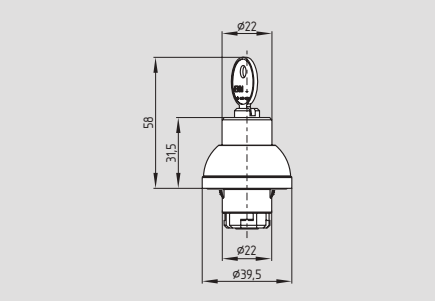

- Key-operated selector switch
- 1, 2 or 3 positions

Technical data

Equipment category:	⟨Ex⟩ II 2GD
Ex protection:	Ex ib IIC T4 X Ex tD A21 IP65 T110°C X
Standards:	EN 60947-5-1, EN 60947-1, EN 61241-0, EN 61241-1, EN 60079-0, EN 60079-11
Max. impact energy:	4 J
Design:	round
Installation-ø:	22.3 mm
Grid dimensions:	40 × 50 mm
Front plate thickness:	1 … 6 mm
Mounting position:	random
Designation:	identification plates, symbols
Climatic resistance to DIN EN 60068:	Part 2-30
Ambient temperature:	0 °C … + 55 °C
Switching frequency:	1,000 s/h
Protection class to EN 60529:	IP65
Full insulation	yes
Materials:	
Front ring/buttons:	chrome-plated brass, powder-coated brass
Fixing:	with mounting flange
Max. tightening torque:	2 Nm
Resistance to shocks to EN 60068-2-27:	< 50 g
Resistance to vibrations to EN 60068-2-6:	5 g
Actuating stroke:	6 mm
Actuating force:	approx. 0.2 N
Mechanical life:	1×10^5 operations
Rohs conformity:	yes

Approvals

⟨Ex⟩ CE

Ordering details

Ex-RS①②③S④

N°	Option	Description
①	S	Key-operated selector switch
	ST	Key-operated spring-return selector switch
②	2	position of the key
	3	
③	2	number of plungers
	3	
④	1	position for key retraction
	2	
	3	

Note

The EX-RLM fixing flange, consisting of mounting flange, contact carrier with contact lugs and 2 plunger elements, is not included in the delivery of the device heads
(refer to page127)

в Беларуси Заказ г.Минск viber и тел.+375447584780 email: minsk17@tut.by

Control devices and indicator lights

Key-operated selector switches/selector switch pushbuttons, lock EKM 30

Brief description		Key-withdrawal position	Type
Key-operated selector switch with 2 latched positions	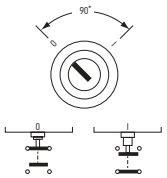	only left only right in both positions	Ex-RSS21S1 Ex-RSS21S2 Ex-RSS21S12
Key-operated selector switch with 3 latched positions	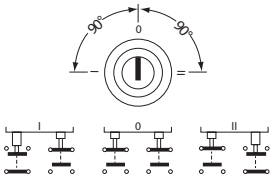	left middle right in all 3 positions	Ex-RSS32S1 Ex-RSS32S2 Ex-RSS32S3 Ex-RSS32S123
Key-operated spring-return selector switch with 1 touch position, automatic return to the zero position, latch position 55°	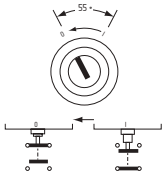	only left	Ex-RST21S1
Key-operated spring-return selector switch with 2 touch positions left and right, automatic return to the zero position	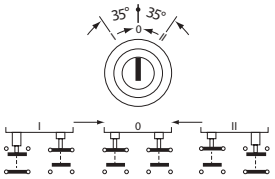	only middle	Ex-RST32S2
Key-operated selector switch pushbutton with 3 positions, touch position 35°, latch position 55° – left switching, right latching	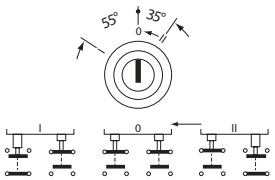	S1 = only left S2 = only middle	Ex-RSST32S1 Ex-RSST32S2
Key-operated selector switch pushbutton with 3 positions, touch position 35°, latch position 55° – left switching, right latching	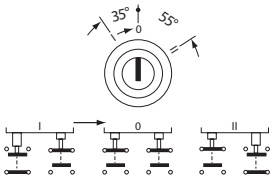	S2 = only middle S3 = only right	Ex-RSTS32S2 Ex-RSTS32S3
Spare key EKM 30 for CES lock (for EX-RSS../RST.., standard for the above listed versions)			SDS2

Special locks and master key function available: On request

Contact elements: See page 124

2 keys belong to the delivery range of the above listed devices

в Беларуси Заказ г.Минск viber и тел.+375447584780 email: minsk17@tut.by

Control devices and indicator lights – Contacts

EX-RF 10...

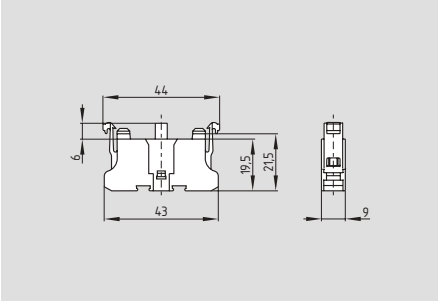

- NC
- Screw connection
- Cable sections
  single-strand 2 × (0.5 … 2.5 mm²)
  multi-strand with conductor ferrules 2 × (0.5 … 1.5mm²)
- Protection class
  Connections: IP20 (finger-safe)
  Wiring compartments: IP40

Approvals

Ordering details

Ex-RF ①

N°	Option	Description
①	10	Contact labelling 1, 2
	10.1	Contact labelling 11, 12

EX-RF 03...

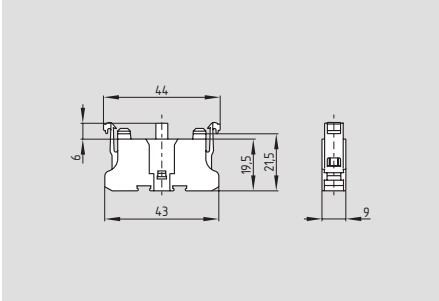

- NO contacts
- Screw connection
- Cable sections
  single-strand 2 × (0.5 … 2.5 mm²)
  multi-strand with conductor ferrules 2 × (0.5 … 1.5mm²)
- Protection class
  Connections: IP20 (finger-safe)
  Wiring compartments: IP40

Approvals

Ordering details

Ex-RF ①

N°	Option	Description
①	03	Contact labelling 3, 4
	03.1	Contact labelling 13, 14

Technical data

Equipment category:	Ⓔx II 2GD
Explosion protection:	Ex ib IIC T4 X Ex tD A21 IP65 T110°C X
Standards:	EN 60947-5-1, EN 61241-0, EN 61241-1, EN 60079-11
U_i:	250 V
I_i:	3.3 A for Ex ib 5.0 A at Ex ic
C_i:	~ 0
L_i:	~ 0
U:	250 V
I:	5 A
P:	max. 1500 W
Contact reliability:	5 VDC/1 mA
Proof of positive opening:	2.5 kV impulse voltage
Positive opening path:	approx. 2 mm after achieving opening point
Air clearance and creepage distance to DIN EN 60 664-1:	4 kV/3
Switching frequency:	1.200 s/h
Switching points:	
NC contact:	approx. 1 mm
NO contact:	approx. 2.5 mm
Temperature range:	–20° C … + 55° C
Climate resistance to DIN EN 60068:	Part 2-20
Mounting position:	random
Mechanical life to EN 60 947-5-1:	10×10^6 operations
Actuating force at stroke end:	approx. 4.5 N
Terminal designations:	to EN 60947-1
Tightening torque for the connecting screw:	max. 1 Nm

в Беларуси Заказ г.Минск viber и тел.+375447584780 email: minsk17@tut.by

EX-RLDE ws 24

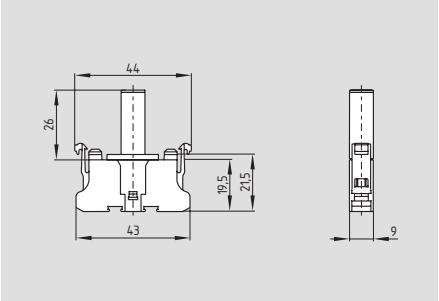

- Light terminal block
- Screw connection
- Cable sections
  single-strand 2 × (0.5 … 2.5 mm²)
  multi-strand with conductor ferrules 2 × (0.5 … 1.5mm²)
- Protection class
  Connections: IP20 (finger-safe)
  Wiring compartments: IP40

Technical data

Equipment category:	⟨Ex⟩ II 2GD
Explosion protection:	Ex ib IIC T4 X
	Ex tD A21 IP65 T110°C X
Standards:	EN 60947-5-1,EN 61241-0,
	EN 61241-1, EN 60079-11
U_i:	30 V
I_i:	not relevant (max. 30 mA)
P_i:	not relevant (max. 30 mA)
C_i:	~ 0
L_i:	~ 0
U:	24 V +/-10%
I:	30 mA
P:	0.9 W
Temperature range:	–20° C … + 55° C
Climate resistance to DIN EN 60068:	Part 2-20
Mounting position:	random
Terminal designations:	to EN 60947-1
Tightening torque for the connecting screw:	max. 1 Nm

Approvals

⟨Ex⟩ CE

Ordering details

Ex-RLDE ws 24

в Беларуси Заказ г.Минск viber и тел.+375447584780 email: minsk17@tut.by

Control devices and indicator lights – Enclosure

EX-EBG 311.O

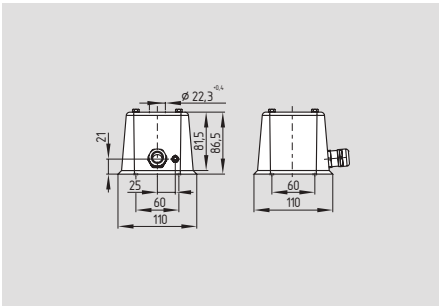

- Empty enclosure in V4A
- Version with 1 fitting hole for installation ø 22.3 m
- incl. 1 cable gland M20

Approvals

Ordering details

EX-EBG 331.O

EX-EBG 633.O

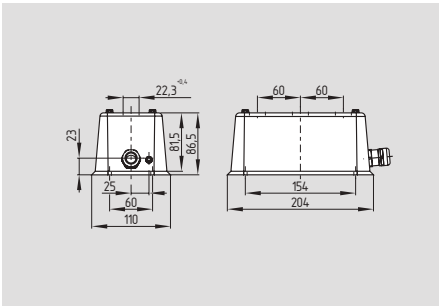

- Empty enclosure in V4A
- Version with 3 fitting holes for installation ø 22.3 mm
- incl. 1 cable gland M25

Approvals

Ordering details

EX-EBG 633.O

EX-EBG 665.O

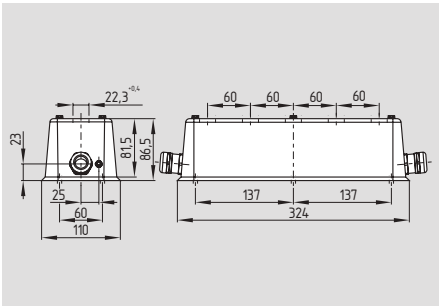

- Empty enclosure in V4A
- Versions with 5 fitting holes for installation ø 22.3 mm
- incl. 2 cable glands M25
- incl. 1 locking screw

Approvals

Ordering details

EX-EBG 665.O

в Беларуси Заказ г.Минск viber и тел.+375447584780 email: minsk17@tut.by

Control devices and indicator lights – Accessories

System components

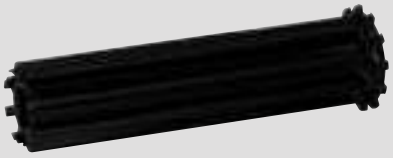

Mounting tool RMW

System components

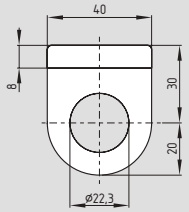

Identification label EX-RZSO

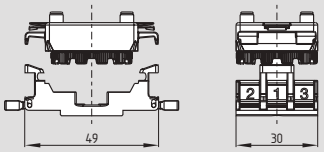

Mounting flange EX-RLM

Ordering details

Mounting tool for mounting flange	**RMW**
Blanking plug	**EX-RB**

Ordering details

Identification label	**EX-RZSO**
Mounting flange	**EX-RLM**

в Беларуси Заказ г.Минск viber и тел.+375447584780 email: minsk17@tut.by

Control devices and indicator lights – Symbols

Drives

401 Electric motor	**402** Pump general	**403** Gear pump	**405** Coolant
406 Oil lubrication	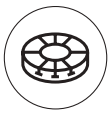 **407** Rotary indexing table	**408** Shuttle table forward	**409** back
410 Brake fan	**411** Caution – live	**412** Clamp table rectangular	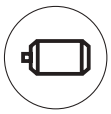 **413** Electrical machine

Signals

501 On	**502** Jog	**503** Automatic	**504** Off
505 Everything off	**506** On – off	**507** Increase of a variable	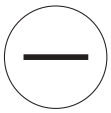 **508** Decrease of a variable
509 Pause (time elapse)	**510** Manual operation	**511** Visual	**512** Hydraulics

Words

513	**514**	**515**	**516**
517	**518**	**519**	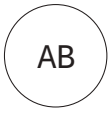 **520**
521	**522**	**523**	**524**

Letters[1]

901	**902**	**903**	**904**

Other numerals available, e.g. for number 9 ordering code 709

в Беларуси Заказ г.Минск viber и тел.+375447584780 email: minsk17@tut.by

Control devices and indicator lights – Symbols

Linear motion

101
Working motion feed

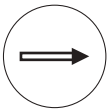

102
Rapid motion or idling

103
Rapid motion

104
Feed

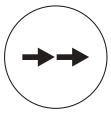

105
Interrupted motion jogging

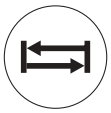

106
Reciprocating motion

107
Limited motion

108
Indexing

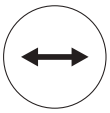

109
Motion in 2 directions

Rotary motion

201
Continuous clockwise rotation

202
Anti-clockwise rotation

203
Clockwise rotation STOP

204
Anti-clockwise rotation STOP

205
1 revolution clockwise

206
Anti-clockwise

207
Rotary indexing

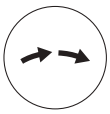

208
Interrupted rotary motion

209
Clockwise motion restricted

210
Anti-clockwise motion restricted

211
Clockwise motion from a restriction

211
Anti-clockwise motion from a restriction

Additional options

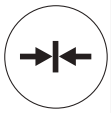

301
Clamping, chucking

302
Release

303
Braking

304
Release brake

305
Unlock

306
Lock

Arabic numerals

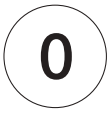

700

701

702

801

802

803

в Беларуси Заказ г.Минск viber и тел.+375447584780 email: minsk17@tut.by

More details

Detailed technical information at:
www.schmersal.net

в Беларуси Заказ г.Минск viber и тел.+375447584780 email: minsk17@tut.by

Key transfer system

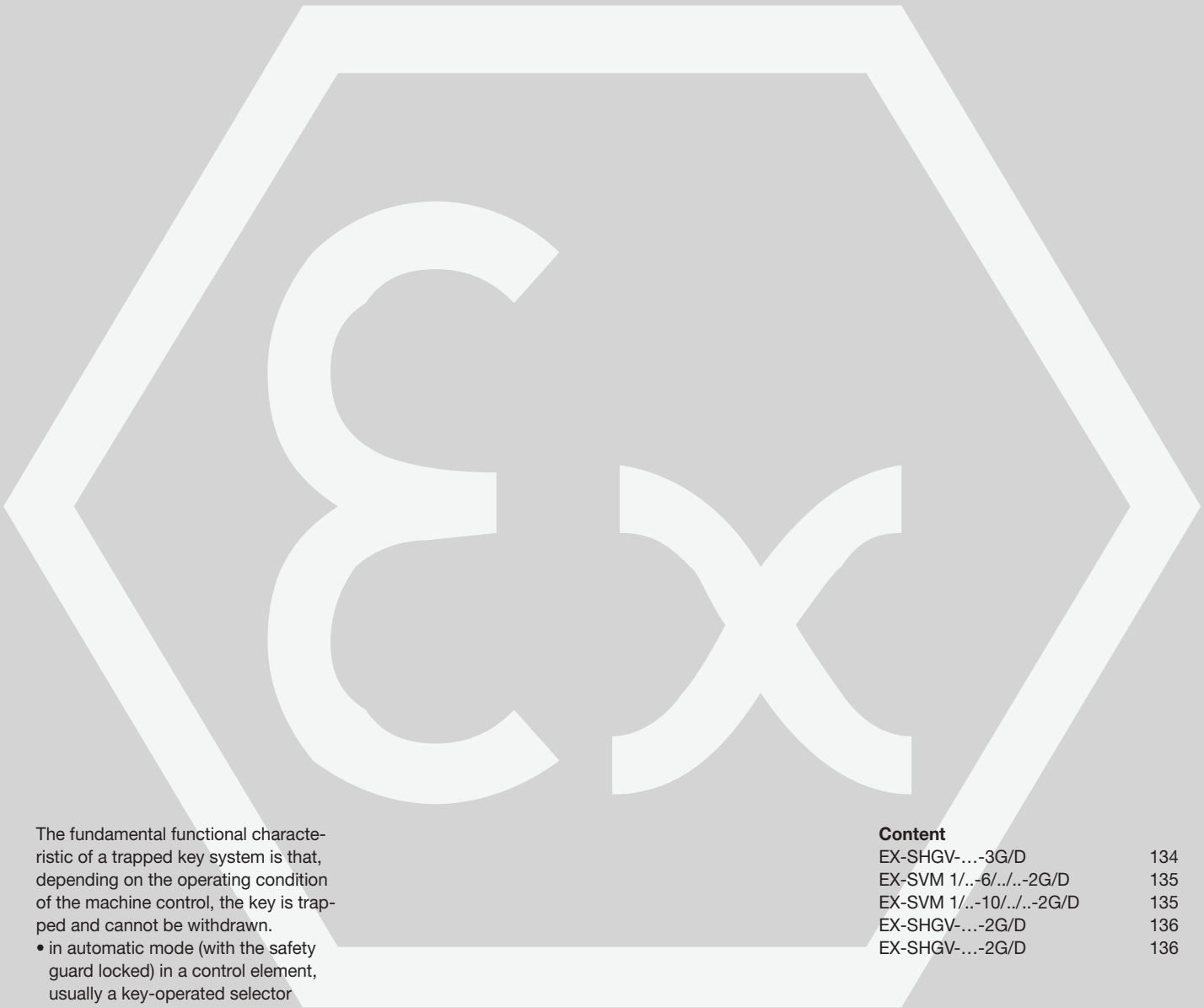

The fundamental functional characteristic of a trapped key system is that, depending on the operating condition of the machine control, the key is trapped and cannot be withdrawn.

- in automatic mode (with the safety guard locked) in a control element, usually a key-operated selector switch or
- if the safety guard is open (in an electrically de-energised condition), in the guard locking device, i.e. a lock

Content

EX-SHGV-…-3G/D	134
EX-SVM 1/..-6/../..-2G/D	135
EX-SVM 1/..-10/../..-2G/D	135
EX-SHGV-…-2G/D	136
EX-SHGV-…-2G/D	136

в Беларуси Заказ г.Минск viber и тел.+375447584780 email: minsk17@tut.by

EX-Trapped key system

Mode of operation

The fundamental functional characteristic of a trapped key system is that, depending on the operating condition of the machine control, the key is trapped and cannot be withdrawn.

- in automatic mode (with the safety guard locked) in a control element, usually a key-operated selector switch or
- if the safety guard is open (in an electrically de-energised condition), in the guard locking device, i.e. a lock

In other words, a principle feature of the system is that the removable key is trapped either in the guard locking device or in the switch lock.

The locking device of the guard is designed in such a way that the trapped key can only be enabled if the guard is closed and locked (fail-safe). Only in this way can the key be transferred from here to the key-operated selector switch.

When the machine control system is switched on the key is trapped and cannot be removed for as long as the switch is set to ON.

If the transfer time between the opening of the key-operated selector switch and the locking of the guard is not sufficient for a hazardous machine motion to come to a standstill, a key-operated selector switch interlocking device may also be required.

Framework conditions

When using the EX-SHGV safety door interlokking system it must be ensured that

- the time between switching off at the control panel and access to the guard is greater than the stopping time of any hazardous motion, or that the key-operated selector switch interlocking device of the type SVE is used;
- only one key is used in the trapped key system and any spare keys available are stored carefully;
- the separate actuators of the EX-SHGV guard locking devices are fitted to the guard in such a way, e.g. with the non-reusable screws supplied with the equipment, that they cannot be released by simple means;
- the entry throat for the separate actuator is fitted in the guard locking device in a concealed position where at all possible. This recommendation applies generally to interlocking devices with separate actuator.

Please note:

- Owing to the trapped key system the systems are less suited to charging doors or moving guards with more frequent access.
- Even if key and lock barrel have 200 individual cuts / tumbler arrangements, a key can be copied in the same way as a separate actuator. Any damage caused as a result of such wilful manipulation of a guard no longer falls within the protection of statutory accident insurance (otherwise there would also be no BG test certificate for the SHGV system) for example.
- Every EX-SHGV system comes with a spare key should the original one be lost under the strict condition that it is kept carefully and not used in the operational key transfer procedure.

в Беларуси Заказ г.Минск viber и тел.+375447584780 email: minsk17@tut.by

EX-Trapped key system

EX-SHGV/ESS key-operated selector switch
The EX-SHGV/ESS key-operated selector switch as control element to interrupt or switch off automatic mode.

EX-SVM key distribution station
The EX-SVM key distribution station is used when multiple guards must be operated with one key selector switch.

Guard locking device Type EX-SHGV

The design of the Guard locking device EX-SHGV is based on that of a position switch with separate actuator, but the function of the position monitoring and locking is based exclusively on a mechanical principle of operation using the integrated lock barrel and the positively connected mechanism as well as the interaction between actuator and the articulating mechanism in the device head.

Version with a second lock barrel

The version with a second lock barrel using which the operation of lock barrel 1 can be blocked if an operator needs to access a room and wishes to protect himself from unintentional start-up of the machine control system by a third party.

в Беларуси Заказ г.Минск viber и тел.+375447584780 email: minsk17@tut.by

EX-Trapped key system

EX-SHGV-...-3G/D

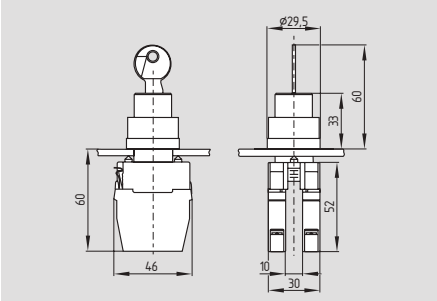

- Key-operated selector switch
- Ex certified
- Mounting hole 22.3 mm
- Metal front ring
- Good resistance to oil and petroleum spirit

Technical data

Equipment category:	Ⓔx II 3GD
Ex protection:	Ex nL IIC T5 X Ex tD A22 IP65 T110°C X
Standards:	EN 60947-1 EN 60947-5-1 EN 61241-1 EN 60079-0 EN 60079-15
Mounting hole Ø:	22.3 mm
Front plate thickness:	1.5 ... max. 6 mm
Spacing:	50 x 50 mm
Max. impact energy:	1 J
Actuating speed:	max. 1 m/s
Protection class:	
Key-operated selector switch:	IP65
Contact element:	IP44
Contact type:	change-over contact with double break, type Zb, with galvanically separated contact bridges, NC contact with positive break
Contact material:	fine silver
Connection:	Screw terminals
U_i:	36 VDC
I_i:	100 mA
P_i:	0.9 W
C_i:	~ 0
L_i:	~ 0
Utilisation category:	AC-15, DC-13
I_e/U_e:	6 A / 250 VAC 4 A / 24 VDC
Max. fuse rating:	6 A gG D-fuse
Ambient temperature:	0 °C ... + 70 °C
Mechanical life:	10 million operations

Contact variants

1 NO / 1 NC EF 103.1

EF 103.2

Approvals

Ⓔx CE

Ordering details

EX-SHGV/ESS21S2/①/11033-3G/D

No.	Option	Description
①	e.g. 201	individual key numbers

Note

Contact variants

Contact element EF103.1	1 NC / 1 NO
Contact element EF103.2	1 NC / 1 NO

included in delivery.

If more contacts are needed, on request.

в Беларуси Заказ г.Минск viber и тел.+375447584780 email: minsk17@tut.by

EX-Trapped key system

EX-SVM 1/..-6/../..-2G/D

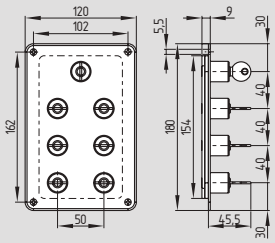

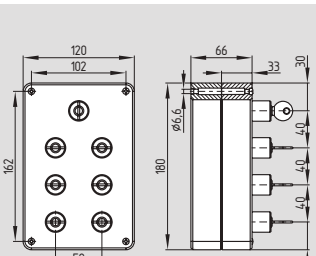

- Key distribution station
- with 6 keys
- Ex certified
- Metal enclosure
- Good resistance to oil and petroleum spirit
- Metal front plate
- 6 Cylinder lock for solenoid keys EX-SHGV..

Approvals

Ordering details

EX-SVM1/①-6②/③-2G/D

No.	Option	Description
①	e.g. 34	individual key number for main cylinder lock
②	…	individual key number for solenoid key EX-SHGV..
③	A	Enclosure for surface mounting
	E	Front plate mounting

EX-SVM 1/..-10/../..-2G/D

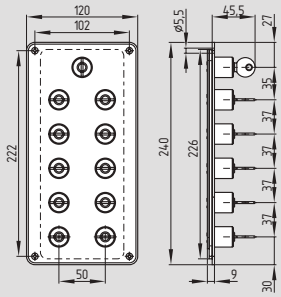

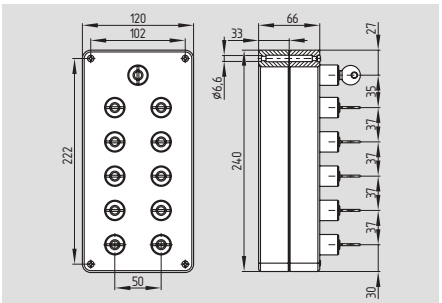

- Key distribution station
- with 10 keys
- Ex certified
- Metal enclosure
- Good resistance to oil and petroleum spirit
- Metal front plate
- 10 Cylinder lock for solenoid keys EX-SHGV..

Approvals

Ordering details

EX-SVM1/①-10②/③-2G/D

No.	Option	Description
①	e.g. 34	individual key number for main cylinder lock
②	…	individual key number for solenoid key EX-SHGV..
③	A	Enclosure for surface mounting
	E	Front plate mounting

Technical data

Equipment category:	Ⓔx II 2GD
Ex protection:	c 85°C X
Standards:	EN 13463-1, EN 61241-0
Design:	Enclosure for top mounting or front plate mounting
Material:	Enclosure for top mounting AlSi12 front plate 1.4301
Actuating speed:	max. 1 m/s
Mechanical life:	10 million operations

в Беларуси Заказ г.Минск viber и тел.+375447584780 email: minsk17@tut.by

EX-Trapped key system

EX-SHGV-...-2G/D

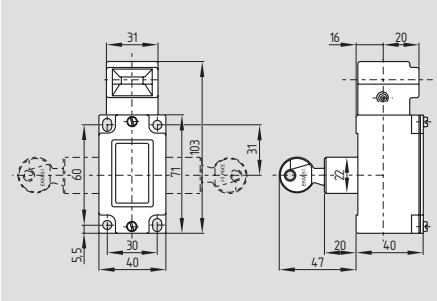

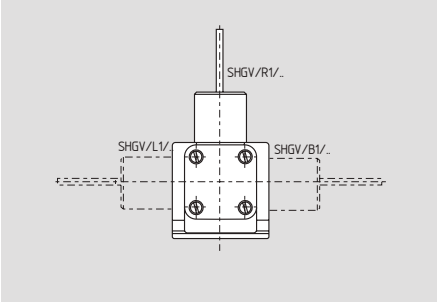

- Interlock
- Ex certified
- Mounting details to EN 50041
- Metal enclosure
- Good resistance to oil and petroleum spirit

Approvals

Ordering details

EX-SHGV/①01/②+③-2G/D

No.	Option	Description
①	B	Cylinder lock on the back
	L	Lock barrel to left
	R	Lock barrel to the right
②	e.g. 201	individual key numbers
③	e.g. BO	For the appropriate actuator see page 137

EX-SHGV-...-2G/D

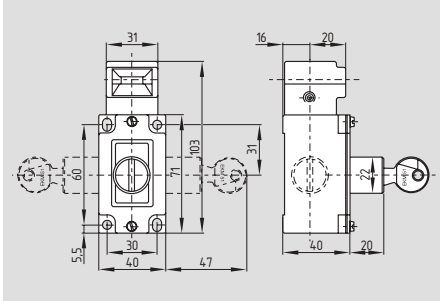

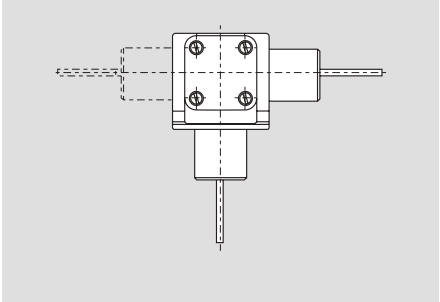

- Interlock
- with a second lock barrel

Approvals

EX-SHGV/①D1/①/③+④-2G/D

No.	Option	Description
①	L	Lock barrel to left
	R	Lock barrel to the right
②	e.g. 201	individual key number for LHS or RHS cylinder lock
③	e.g. 34	individual key number for second cylinder lock
④	e.g. BO	For the appropriate actuator see page 137

Technical data

Equipment category:	II 2GD
Ex protection:	c 85°C X
Standards:	EN 13463-1, EN 61241-0
Design:	fixings to EN 50041
Enclosure:	Al Si12 die-casting, painted
Actuating speed:	max. 1 m/s
Mechanical life:	10 million operations

в Беларуси Заказ г.Минск viber и тел.+375447584780 email: minsk17@tut.by

EX-Trapped key system

System components

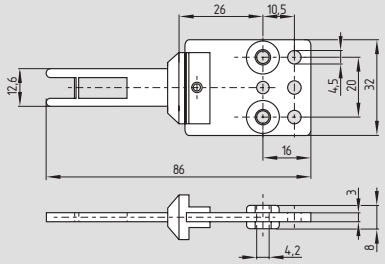

Straight actuator EX-BO

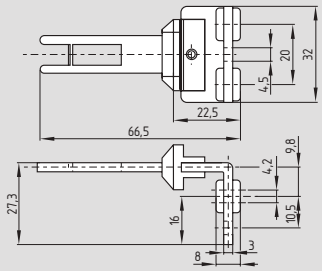

Angled actuator EX-BOW

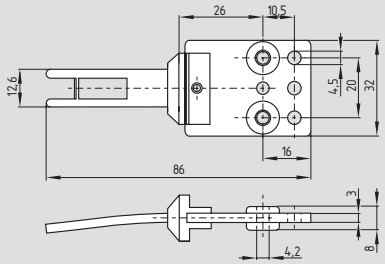

Straight radius actuator EX-BOR

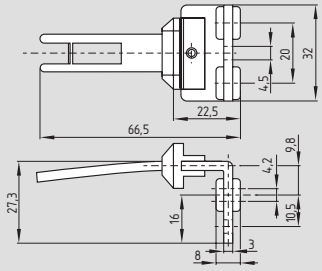

Angled radius actuator EX-BOWR

Ordering details

Straight actuator	**EX-BO**
Angled actuator	**EX-BOW**
Straight radius actuator	**EX-BOR**
Angled radius actuator	**EX-BOWR**

в Беларуси Заказ г.Минск viber и тел.+375447584780 email: minsk17@tut.by

Optoelectronic safety systems for the protection of man and machine

Product information | Version 06

SCHMERSAL

Safe solutions for your industry

в Беларуси Заказ г.Минск viber и тел.+375447584780 email: minsk17@tut.by

You will also find detailed information regarding our product variety on our website:

www.schmersal.net

Online documentation in 13 languages

The online catalogue for our customers is permanently updated. The Main catalogue can be consulted on the Internet in as much as 13 languages.
The technical data of our entire product range are available 24/7, always upto-date. The declarations of conformity, the test certificates and the mounting instructions can be consulted or even downloaded as well.

Service for designers

The online catalogue also includes the technical drawings of our products – a special service to designers. In this way, they can be downloaded and directly fed in CAD-systems.
The Schmersal homepage furthermore contains up-to-date information on general subjects, technical articles on machine safety as well as news regarding events and trainings.
To be bookmarked!

The direct way

If you need further information or you want personal advice, you can call us as well:
Tel. +49-(0) 2 02-64 74-0.

The addresses of our representations in Germany and abroad can be found on the front pages of this catalogue.

We are at your disposal –
anyplace, anywhere, anytime!

Warning!

The Schmersal programme is not intended for private consumers, i.e. that they are not consumer products within the meaning of the European Directives (in Germany within the meaning of § 5 GPSG) or other national laws.

Subject to technical modifications and errors.

The data specified in this catalogue are carefully checked typical standard values.

Descriptions of technical correlations, details on external control units, installation and operating instructions or similar have been provided to the best of our knowledge. This however does not mean that any warranted characteristics or other properties under liability law may be assumed, which extend beyond the “General Terms and Conditions of Delivery of Products and Services of the Electrical Industry”.

We trust you will understand that the user must check our information and recommendations before using our equipment.

в Беларуси Заказ г.Минск viber и тел.+375447584780 email: minsk17@tut.by

Content

Introduction

Optical safety sensors . . . . . Page 4

Design and operating principle . . . . . Page 6

Application EN ISO 13855. . . . . Page 8

Modes of operation and functions . . . . . Page 10

Services. . . . . Page 11

Products

Safety light barriers . . . . . Page 13

Safety light curtains and light grids . . . . . Page 21

Safety monitoring modules . . . . . Page 39

Appendix

Glossary . . . . . Page 44

Schmersal offers its customers a comprehensive range of products for optoelectronic safeguarding of hazardous areas, ranging from light barriers, light grids and light curtains with different functions (e.g. blanking, muting, cascading) up to laser scanners. A large range of accessories, e.g. deflecting mirrors, mounting brackets etc. helps the user fitting and using those active optoelectronic protective devices (AOPD) in his specific application.

This brochure contains a brief introduction of the individual optoelectronic product families as well as the main accessories for the AOPD systems of the Schmersal Group.

The technical data of the individual devices are completed with wiring examples, e.g. in combination with Safety monitoring modules or for integration in the AS-i Safety at Work System. Appropriate components can be wired into a complete safety system.

в Беларуси Заказ г.Минск viber и тел.+375447584780 email: minsk17@tut.by

Introduction – Optoelectronic safety sensors

EN 61

The field of automation is subject to a permanent and innovative change of products and applications. The focus is on increasing the productivity and realising a smooth-running production process with a minimum of human interventions on machinery and systems. The ideal, a fully automated and totally safe machine however will always remain a dream, though the robots used in production plants already are a big step towards this goal.
Human intervention and knowledge will always be required for the commissioning, monitoring and maintenance of modern industrial systems. Man however is not infallible and ignorance or lack of information, thoughtlessness or negligence often leads to damages.

For these reasons European directives such as the Machinery Directive 2006/42/EG and their corresponding standards were implemented at European level.
These standards aim at detecting and constructively avoiding all possible risks and hazards during the planning and project phase of machines and systems. Safety components must be used to minimise or eliminate the residual risks. In this way, manufacturers and users are making equivalent efforts to set up an optimal process flow, which offers the highest possible protection to the operating staff. The challenge for all manufacturers of safety components is to design efficient and safe product solutions for mechanical engineers. Flaps and doors are the simplest means of access to the machine.
These separating hardguarding safety solutions offer an efficient and effective protection against hazardous movements and products being ejected from the machine.
When these safety guards are opened, the machine is brought to standstill (through the corresponding safety sensor transmitting the “stop” signal to the control), which interrupts and therefore slows down the production. In case of continuous processes, which must not be interrupted, solenoid interlocks protect man and the work piece against damages.
Safety fences are not suitable for production processes requiring the material to be transported into the working area by means of conveyor belts, as they do not allow for an ergonomic and optimal work sequence.

These separating hardguarding safety solutions offer an efficient and effective protection against hazardous movements and products being ejected from the machine.

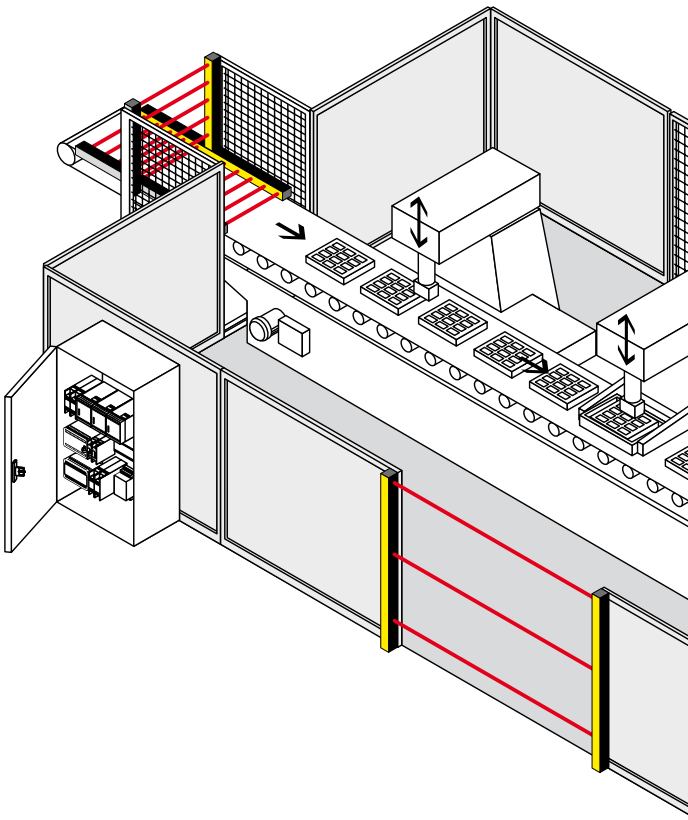

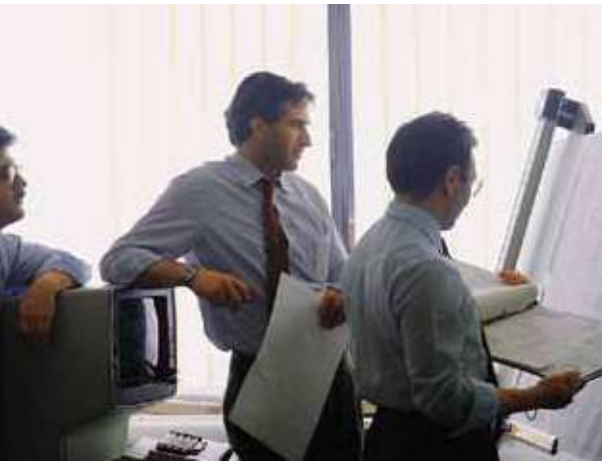

в Беларуси Заказ г.Минск viber и тел.+375447584780 email: minsk17@tut.by

Typical applications:

- Power-driven machines
- Power-driven presses in metalworking, plastics, leather, stone working and rubber processing industry
- Folding presses and cutters
- Power-driven machines
- Power-driven presses in metalworking, plastics, leather, stone working and rubber processing industry
- Folding presses and cutters
- Filter presses
- Punching machines in leather, textile and plastics processing
- Robots stations and welding booths
- Materials handling and storage technology
- und vieles mehr

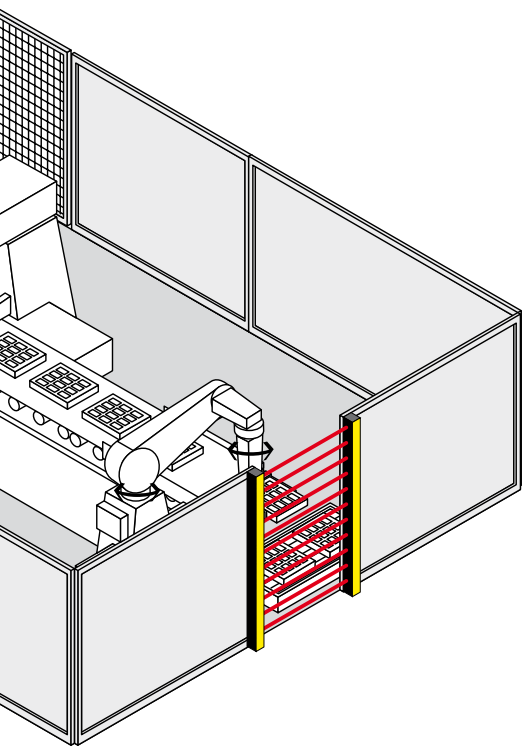

Depending on the application, the AOPD's are used for point of operation, danger zone and perimeter guarding. The user can choose from a large range of different optoelectronic safety solutions e.g. light barriers, light grids, light curtains and laser scanners.

в Беларуси Заказ г.Минск viber и тел.+375447584780 email: minsk17@tut.by

Optoelectronic

Safety light barriers

The safety light barrier systems of the SLB range are active optoelectronic protective devices (AOPD) fulfilling the Control Category 2 or 4 in accordance with EN 954-1 or EN 61496. These systems are used as entry guards on hazardous zones, points of operation and entrances.
They protect human life without restricting the production flow.
Typical applications for safety light barriers are on robots, automatic-processing plants, transfer lines, rack storages and pallet loaders.
The entire safety light barrier system includes a light emitter, a light receiver and a safety monitoring module.
This module monitors the signals of the emitter.
If the light beam is interrupted, a signal is emitted to bring the dangerous movement of the machine to standstill.
The safety monitoring module integrates functions such as start and restart inhibit as well as a contactor monitoring.
The maintenance-free safety sensors of the system with protection class IP 67 offer an integrated soiling check.
Because of their small size, safety light barriers can be fitted almost everywhere.

Safety light grids / light curtains

The safety light curtains and safety light grids of the SLC and SLG meet the requirements of Control Category 2 or 4 to EN 954-1 and Type 2 or Type 4 to EN 61496.
They safeguard points of operation and hazardous areas on different applications, e.g. presses, robot stations, injection moulding machines, pallet machines, etc.
In these active optoelectronic protective devices (AOPD), the emitter and receiver are fitted in two separate enclosures. An invisible infrared signal is sent from the emitter and monitored by the receiver. If the light beam is interrupted by an object or a person, a stop signal is emitted to bring the machine to standstill.
The protection field is defined by the height and width of the protection field. The protected height is the range between the first and last infrared light beam of a light curtain. The protected height defines the physical size of the system to be used.
The protected width or operating range is the distance between the transmitter and receiver unit.

For an accurate detection of objects with different sizes in the hazardous area, the user can choose between light grids and light curtains with different resolutions. Here, the following rule applies: the smaller the distance between two adjacent light beams, the more accurate the detection sensitivity of the AOPD.
For the detection of body parts, a distinction is made between finger, hand and body protection.
DIN EN ISO 13857 sets the biometric data for finger protection to 14 mm, for hand detection to 30 mm, for leg detection up to 70 mm and for body detection to over 70 mm.
Safety light grids with 2, 3 or 4 individual beams are generally used to detect the penetration of the entire human body.
Safety light curtains are multiple beam systems (Resolution < 40 mm) and can also detect smaller objects in case of intrusion into the protected field. The maintenance- free safety light curtains and light grids can be smoothly fitted using an M12 connector and are equipped a diagnostic interface and LED indication for status messages.

Depending on the type of safety light curtain or light grid used, the components offer an integrated monitoring module with start/restart inhibit and external device monitoring. Additional functions such as blanking, muting and cascading of the light curtains are available as well.
The SLC and SLG product series therefore offer a maximum of flexibility for safeguarding different points of operation.

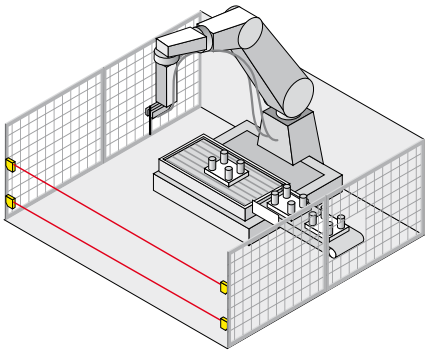

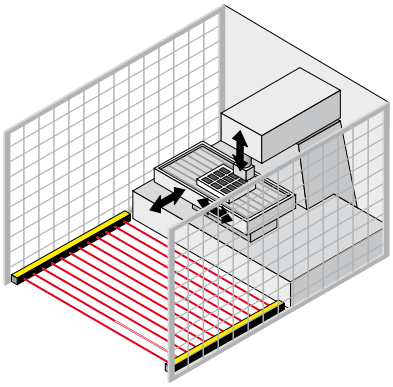

в Беларуси Заказ г.Минск viber и тел.+375447584780 email: minsk17@tut.by

safety systems

Important conditions for the use of optoelectronic safety devices:

In order to choose the appropriate active optoelectronic protective device (AOPD) such as light barriers, light curtains/ grids to use them correctly, both the requirements of the standards (EN 61496, EN ISO 13849, EN ISO 13855, C standards etc.) and product-specific features (detection sensitivity, range, etc.) must be taken into account.
AOPD's can be used, provided that:

- the dangerous movement can be stopped at all times and that it is ensured that the dangerous area can only be reached after the movement has come to standstill,
- The protected width or operating range is the distance between the transmitter and receiver unit.
- no objects (work pieces, sparks, liquids, etc.) can be ejected,
- the AOPD meet the requirements of Type 2 or Type 4 acc. to EN 61496,
- the dangerous area can only be reached by passing through the protected field of the AOPD,
- reaching over, under or through the protected field is impossible,
- the start or restart command devices are fitted in such a way that the entire hazardous area is completely visible from the outside and that it cannot be activated from within the hazardous area
- and the safety distance is calculated and constructively applied in accordance with EN ISO 13855.

The effectiveness of the safety guard corresponds to the risk assessment, which was carried out during the planning and design phase, taking all important boundary conditions, e.g. environment, machine and function into account.

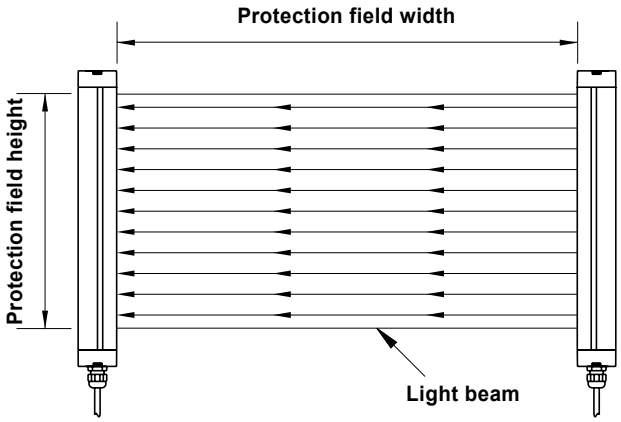

в Беларуси Заказ г.Минск viber и тел.+375447584780 email: minsk17@tut.by

Safety

EN ISO 13855

Safety distances for light curtains

The safety laser scanners of the LS series are used for protection of man on machines, where dangerous movements can occur.

The standard EN ISO 13855 provides the user with detailed information about the calculation of the minimum safety distances. These include the following important influencing factors:

- stopping time of the entire system, taking the different reaction times of the individual systems into account (e.g. machine, safety monitoring module, AOPD etc.)
- capacity of the AOPD to detect body parts (fingers, hand and entire human body)
- set-up of the safety guard in normal condition (vertical fitting), parallel condition (horizontal fitting) or at an arbitrary angle in front of the safety guard and
- the speed at which the protection field is approached.

For the calculation of the minimum safety distance **S** to the hazardous area, EN ISO 13855 presents the following general formula:

$$S = K \times T + C$$

Where:

S the safety distance to the hazardous area (mm)

K the approach speed of the body or the body part (mm/s)

T total reaction time of the system (s) (including the machine's run-out time, the reaction time of the safety guard and the safety monitoring module etc.)

C additional distance (mm) before the safety guard

Normal approach for light curtains: (Resolution: max. 40 mm)

The minimum safety distance **S** is calculated using the following formula:

$$S = 2000\ T + 8(D-14)$$

(D = Resolution).

This formula applies to safety distances up to 500 mm. The minimum safety distance Smin must not be less than 100 mm.

If the calculation produces a distance larger than 500 mm for **S**, the calculation can be repeated with a lower approach speed:

$$S = 1600\ T + 8\ (D-14)$$

In this case, Smin may not be less than 500 mm.

If the hazardous spot of the machine can be reached from top due to its special configuration, the top beam of the light barrier must be calculated and fitted with CRO in accordance with Table 1 (EN ISO 13855).

Normal approach for light curtains: (Resolution: from 40 mm up to max. 70 mm)

The minimum safety distance **S** is calculated using the following formula:

$$S = 1600\ T + 850$$

The height of the topmost light beam must be at least 900 mm, the height of the lowermost light beam maximum 300 mm above the bottom (for the protection of children younger than 14: 200 mm)

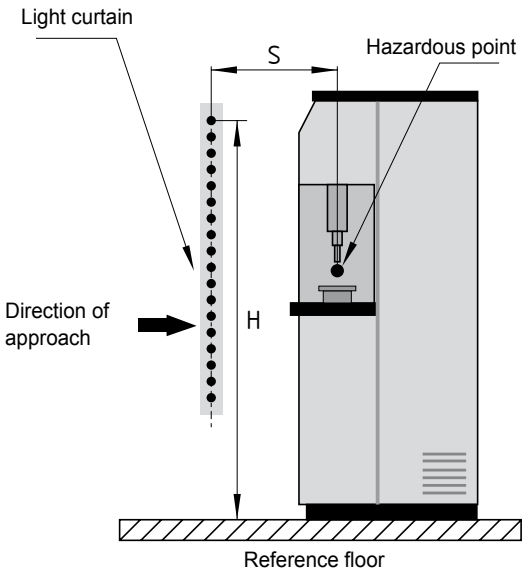

в Беларуси Заказ г.Минск viber и тел.+375447584780 email: minsk17@tut.by

distance

Normal approach for light grids: (Resolution: > 70 mm)

The minimum safety distance **S** is calculated using the following formula:

S = 1600 T + 850

For safety guards with multiple beams, height H (mm) above the reference floor of the individual beams must be applied in the following way:

Number of beams	Height above the reference floor
2	400, 900
3	300, 700, 1100
4	300, 600, 900.12

When using light curtains or light grids, particular attention must be paid to the tampering possibilities of the safety guard and to the mechanical risks (e.g. crushing, shearing, cutting, ejection).

Horizontal approach for light curtains/grids (Resolution: > 50 mm)

The minimum safety distance **S** is calculated using the following formula:

S = 1600 T + 1200 – 0.4 H

Here, Smin is 850 mm. The lowest authorised height H depends on the resolution D of the light curtain:

H = 15 (D-50)

For this type of safety guard, the maximum height H is 1000 mm.
In the risk analysis, special attention must be paid to the prevention of unintentional undetected access from underneath the protection field.

Further calculation examples can be found in DIN EN ISO 13855 as well as in the mounting instructions of the SLC/SLG safety sensors.

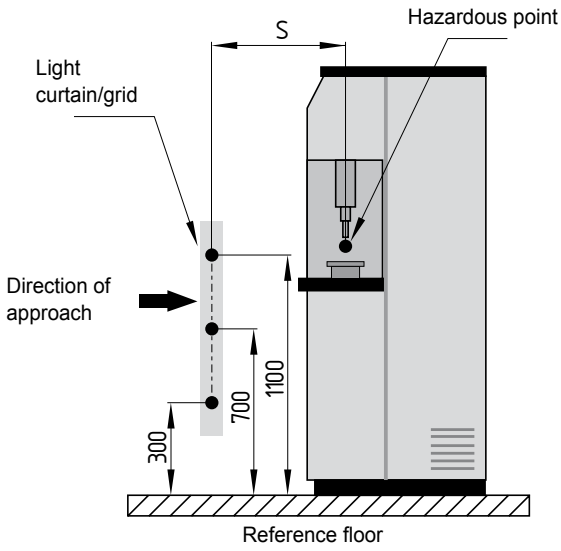

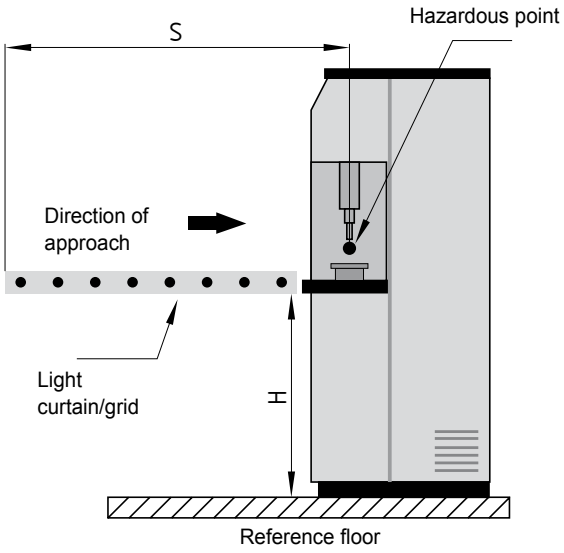

в Беларуси Заказ г.Минск viber и тел.+375447584780 email: minsk17@tut.by

Modes of operation and functions

Master/Slave cascading

For the SLC/SLG…M/S product series, the master light curtain can be extended with another (slave) light curtain (cascading). In this way, multiple protection fields can be generated. A protection field is created between the emitter and receiver and between the slave components.

This device cascading provides for a comfortable and efficient protection of contiguous protection fields against reaching over or through the protection field. The slave light curtains are connected to the master by means of an M12 connector.
The master and slave light curtains are available in different sizes and resolutions and allow for almost any combination.

Muting

If goods or objects must be transported in or out of the hazardous area without stopping the machine, the safety light curtain must be automatically and temporarily suspended.

To this end, two or four muting sensors are used to detect whether a person is approaching the hazardous area or a transport system enters or leaves the hazardous area. Suitable muting sensors are light barriers, proximity switches or position switches.

The integrated safety-muting controller of the safety light curtain or light grid monitors and controls the muting process.

The safety outputs are not disabled. Any malfunction of the monitored signal source will cause the OSSD's to be switched off.
Depending on the application, different light curtains with integrated muting function are available.
Detailed product information can be found in the manuals.

Blanking /Floating Blanking

If continuity of the production process is required, a part of the protection field can be blanked without triggering a stop signal.
In this way, objects such as work pieces can be fed or a conveyor belt can be positioned at a fixed position in the protection field.

The integrated floating blanking function of the SLC 440 light curtains enables a flexible blanking of up to 2 adjacent light beams in the protection field of the light curtain. This function is required to ensure that one or two adjacent light beams can be interrupted at an undefined position in the protection field.

In this way, objects such as fixtures or materials with slightly varying heights can be fed through the light curtain without triggering a stop signal. Different blanking functions are available. The distinguishing feature of the different modes is the number of light beams that can be interrupted by an object. In addition to that, it can be defined whether the object may interrupt the protection field permanently or only temporarily. The interrupted light beams can be at any position in the protection field.

Aport from the first infrared light beam (the beam closest to the connector), any light beam can be used for blanking.

When blanking is applied, the resolution of the light curtain changes. The technical documentation of the different light curtains includes the tables with the effective resolutions D to calculate the minimum safety distance to EN ISO 13855.

Further technical product information can be found in this brochure.

Cyclic operation
Cyclic operation is a mode of operation, in which the machine automatically starts a work process, as soon as the operator releases the protection zone of the light grid.
A cycle is defined as the one-time interruption and release of the protection zone.
In one-cycle operation, a new machine cycle is initiated, when the protection zone is interrupted one time.

Example:
The material is fed automatically without interruption of the protection zone. After initialisation, the machine starts the first cycle. The operator now interrupts the protection zone to remove the material. The next cycle starts automatically.

In two-cycle operation, a new machine cycle is started when the protection zone is interrupted twice.

Example:
The operator loads the machine and gives the start command. After the process is finished, the operator removes the processed material (1st cycle) and loads a new part for processing (2nd cycle). The next cycle starts automatically.

The light grid additionally monitors a signal (machine contact) of the machine, which signals the end of the hazardous movement. This signal is used for the cycle reset and enables an immediate intervention in the protection zone.

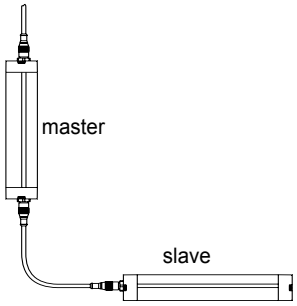

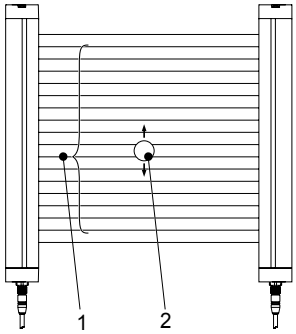

1 Floating-Blanking-Area
2 Movable object

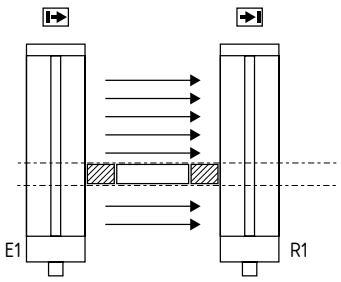

в Беларуси Заказ г.Минск viber и тел.+375447584780 email: minsk17@tut.by

Services

Testing of the safety guards

The master and slave light curtains are available in different sizes and resolutions and allow for almost any combination.

Initial inspection of safety guards

The initial inspection of safety guards includes the inspection of the hereafter mentioned conditions and circumstances:

- Checking the compliance of the AOPD operation with the current utilisation of the machine
- Checking the suitability and the capability of the selected safety guard, the assembly and the operating mode to counteract apparent hazards
- Checking the compliance of the AOPD with the type required by EN 61496
- Checking the compliance of the AOPD's interlinking up to the signal transmission in the forwarding control system with the required control category
- Checking whether the AOPD is tamper-proof

Periodic inspection of safety guards

In addition to the inspection services, "the initial inspection of safety guards" includes the "periodic inspection":

- Checking whether the safety guard is capable of processing the application
- Subsequent adjustment of the AOPD
- Removal of soiling
- Elimination of minor failures, for as far as this is possible within a reasonable period of time.

Are not included in the service scope: the reprogramming of the protection fields as well as the parameter setting of programmable systems.

Execution of the run-on measurement

The conductance of run-on measurements includes the hereafter described performances:

- Measuring the stopping time on the basis of multiple individual measurements
- Calculating the safety distance to EN ISO 13855 or possible other prevailing regulations, (harmonised) C-standards

The customer will receive a test report in writing of every agreed inspection service.

в Беларуси Заказ г.Минск viber и тел.+375447584780 email: minsk17@tut.by

Always up-to-date
Online on the internet

You will find detailed information at
www.schmersal.com

в Беларуси Заказ г.Минск viber и тел.+375447584780 email: minsk17@tut.by

Safety light barriers

System features:

- Type 2 and Type 4 to EN 61496
- Up to 4 pairs of one-way light barriers can be connected
- Different functions: Start/Restart interlock Contactor monitoring Cyclic testing
- Integrated soiling check
- Status and error indication
- Signalling outputs for external indications
- Maintenance- free
- Extremely compact design
- Simple, flexible mounting and adjustment

в Беларуси Заказ г.Минск viber и тел.+375447584780 email: minsk17@tut.by

SLB 200

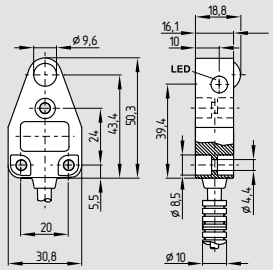

- Range to 4 m
- LEDs visible from both sides
- Protection class IP67

Approvals

TÜV CE

Technical data

Standards:	IEC/EN 61496
Control Category:	2
Enclosure:	ABS 10 % GF
Enclosure dimensions:	31 x 50.5 x 19 mm
Connection:	
- emitter:	10 cm cable with male connector M8, 3-pole
- receiver:	10 cm cable with male connectorM8, 4-pole
Max. cable length:	50 m
Protection class:	IP67
Response time:	30 ms *
Range:	4 m
Start/Restart interlock:	*
Contactor control:	*
Light emission wavelength:	880 nm
U_e:	24 VDC ± 20%
Safety outputs:	*
Angle of radiation:	± 4°
Min. size of object:	9 mm Ø
LED status indication:	soiling, switching condition and power on
Ambient temperature:	−10 °C … +55 °C
Storage and transport temperature:	−20 °C … +80 ºC

* only in combination with safety monitoring module SLB 200-C04-1R

System components

SLB 200-C04-1R

Connector plug

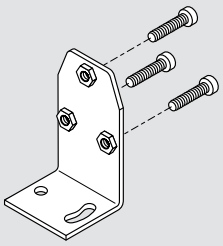

Mounting angle BF 31

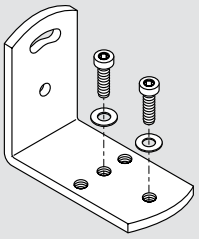

Mounting angle BF UNI 1

Ordering details

SLB 200-①31-21

Nr.	Option	Description
①	E/R	Emitter / receiver

Note

The system components (safety monitoring module, cable, etc.) are not included in delivery.

Ordering details

Monitoring of safety light barriers
SLB 200-C04-1R **refer to page 4-6**

Connector plug (female)
for emitter: 3-pole straight
without cable **101210562**
with cable 2 m **101210564**
with cable 5 m **101210566**
for receiver: M8, 4-pole straight
without cable **101210015**
with cable 2 m **101209946**
with cable 5 m **101209942**

Mounting angles **BF 31**
Mounting angles universal **BF UNI 1**

в Беларуси Заказ г.Минск viber и тел.+375447584780 email: minsk17@tut.by

SLB 400

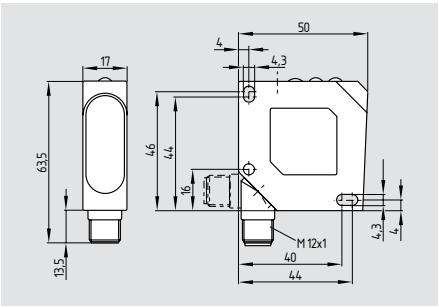

- Range to 15 m
- Connecting plug can be rotated
- LED switching conditions display
- Protection class IP67

Approvals

Technical data

Standards:	IEC/EN 61496
Control Category:	4*
Enclosure:	ABS
Enclosure dimensions:	50 x 50 x 17 mm
Connection:	M12, 4-pole coupler socket, can be rotated
Max. cable length:	100 m
Protection class:	IP67
Response time:	25 ms*
Range:	15 m
Start/Restart interlock:	*
Contactor control:	*
Light emission wavelength:	880 nm
U_e:	24 VDC ± 20%
Safety outputs:	*
Angle of radiation:	± 2°
Min. size of object:	13 mm Ø
LED status indication:	soiling, switching condition and power on
Ambient temperature:	0 °C … +60 °C
Storage and transport temperature:	−20 °C … +80 °C

* only in combination with safety monitoring module SLB 400-C10-1R

System components

SLB 400-C10-1R

Connector plug

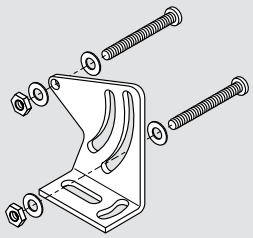

Mounting angle BF 50

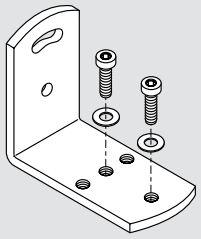

Mounting angle BF UNI 1

Ordering details

SLB 400-①50-21P

Nr.	Option	Description
①	E/R	Emitter / receiver

Note

The system components (safety monitoring module, cable, etc.) are not included in delivery.

Ordering details

Monitoring of safety light barriers
SLB 400-C10-1R **refer to page 4-8**

Connector plug (female) for emitter/receiver: M12, 4-pole straight

without cable	**101208522**
with cable 2 m	**101209937**
with cable 5 m	**101209918**

Mounting angles	**BF 50**
Mounting angles universal	**BF UNI 1**

в Беларуси Заказ г.Минск viber и тел.+375447584780 email: minsk17@tut.by

SLB 200-C

- Up to two pairs of light barrier devices can be connected
- Co-ordinated for use with SLB 200 R/E safety light barriers
- 1 safety contact, STOP 0
- 1 signalling output
- Operating voltage 24 VDC
- Test input
- LED display of switching conditions
- Response time ≤ 30 ms
- Start/Restart interlock can be switched active or inactive
- Contactor monitoring can be switched active or inactive
- Additional cyclic testing

Technical data

Standards:	IEC/EN 61496-1/-2, IEC 60947-5-3, IEC 61508
Start conditions:	Test button, start-reset button, ON/OFF coding
Feedback circuit (Y/N):	yes
Max. switching frequency:	10 Hz
Rated operating voltage U_e:	24 VDC ± 20%
Rated operating current I_e:	180 mA
Outputs:	
Stop category 0:	1
Stop category 1:	0
Number of safety contacts:	1
Number of auxiliary contacts:	0
Number of signalling outputs:	1
Max. switching capacity of the safety contacts:	8 A
Switching capacity of the signalling outputs:	500 mA
Max. fuse rating of the safety contacts:	4 A gG D-fuse
Utilisation category to EN 60947-5-1:	AC-15: 250 V / 2 A DC-13: 24 V / 2 A
Ambient conditions:	
Environmental temperature:	0 °C … +50 °C
Storage and transport temperature:	−20 °C … +80 °C
Protection class:	Enclosure: IP40, Terminals: IP20, Clearance: IP54
Mounting:	Snaps onto standard DIN rail to EN 60715
Connection type:	Screw connection
max. cable section:	4.0 mm² (incl. conductor ferrules)
Dimensions (Height/Width/Depth):	84 x 45 x 118 mm

Approvals

TÜV CE

Ordering details

SLB 200-C04-1R

в Беларуси Заказ г.Минск viber и тел.+375447584780 email: minsk17@tut.by

Safety light barriers

Note

- Monitoring two pairs of light barrier devices and the power contactor using the SLB 200-C safety monitoring module
- Test push button Ⓣ
  The test push button is connected to X13 and X14 in order to carry out a check of the light barrier monitoring function. The terminals X15 and X16 must be bridged.
- The wiring diagram is shown for the de-energised condition.
- Contactor check
  To monitor an external contactor, the feedback circuit is connected to X17 and X18. The terminals X19 and X20 must be bridged.
- Start push button Ⓢ
  The start push button can be used to start the monitoring of the light barriers for a new start or after an interruption. The terminals X3 and X4 must be bridged.
- It is also possible to connect only one pair of light barrier devices.

Wiring diagram

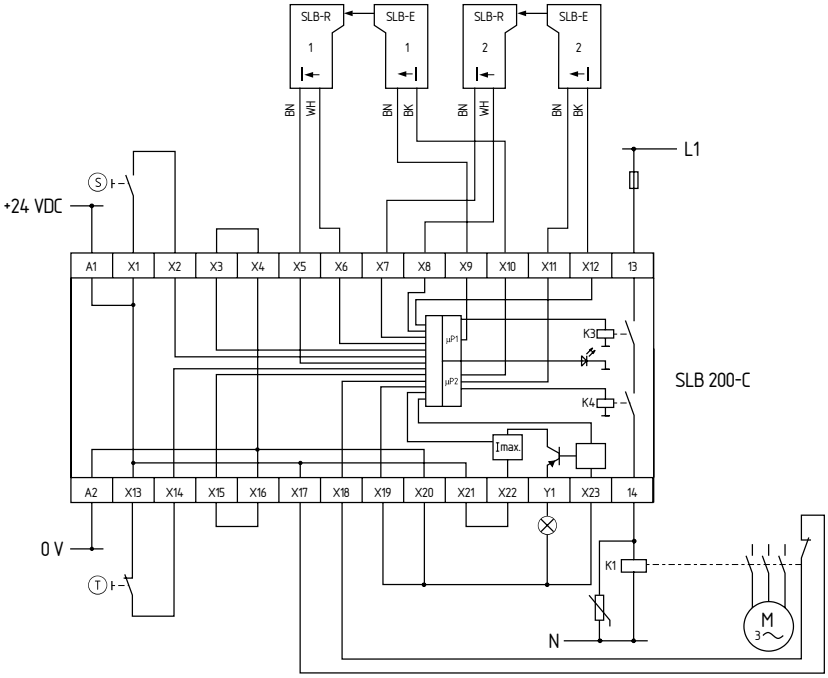

Note

In order to set for the desired mode of operation and number of light barriers connected, remove the front cover of the safety monitoring module. As supplied all switches are in Position 1.

The required functions can be selected by means of the internal DIPswitches.

	DIPswitch 1	**DIPswitch 2**	**DIPswitch 3**
Position 1	With contactor check	With start/restart interlock	Connection of two light barriers
Position 2	Without contactor check	Without start/restart interlock	Connection of one light barrier

Inductive loads (e.g. contactors, relays, etc.) are to be suppressed by means of a suitable circuit.

в Беларуси Заказ г.Минск viber и тел.+375447584780 email: minsk17@tut.by

SLB 400-C

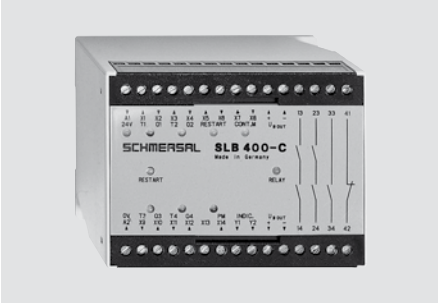

- Up to 4 light barrier pairs SLB 400 can be connected
- Co-ordinated for use with SLB 400 R/E safety light barriers
- 2 safety contacts, STOP 0
- 2 signalling outputs
- Cross-wire monitoring
- ISD Integral System Diagnostics
- Operating voltage 24 VDC
- Feedback circuit to monitor external contactors
- Two short-circuit proof additional transistor outputs
- Response time ≤ 30 ms
- Start/Restart interlock can be switched active or inactive
- Contactor monitoring can be switched active or inactive
- Can be coded

Technical data

Standards:	IEC/EN 61496-1/-2, IEC 60947-5-3, IEC 61508
Start conditions:	Start-reset button, ON/OFF coding
Feedback circuit (Y/N):	yes
Max. switching frequency:	10 Hz
Rated operating voltage U_e:	24 VDC ± 15%
Rated operating current I_e:	0.3 A without additional transistor outputs and safety light barriers
Max. fuse rating of the operating voltage:	1 A
Outputs:	
Stop category 0:	2
Stop category 1:	0
Number of safety contacts:	2
Number of auxiliary contacts:	2
Number of signalling outputs:	2
Max. switching capacity of the safety contacts:	2 A
Switching capacity of the auxiliary contacts:	2 A
Switching capacity of the signalling outputs:	100 mA
Max. fuse rating of the safety contacts:	2 A gG D-fuse
Utilisation category to EN 60947-5-1:	AC-15: 250 V / 2 A DC-13: 24 V / 2 A
LED display:	ISD
Ambient conditions:	
Environmental temperature:	0 °C … +55 °C
Storage and transport temperature:	−25 °C … +70 °C
Protection class:	Enclosure: IP40, Terminals: IP20, Clearance: IP54
Mounting:	Snaps onto standard DIN rail to EN 60715
Connection type:	Screw connection
max. cable section:	4.0 mm² (incl. conductor ferrules)
Dimensions (Height/Width/Depth):	75 x 99.7 x 110 mm

Approvals

Ordering details

SLB 400-C10-1R

в Беларуси Заказ г.Минск viber и тел.+375447584780 email: minsk17@tut.by

Safety light barriers

Note

- Monitoring up to four pairs of light barrier devices and the power contactors using the SLB 400-C safety monitoring module
- The wiring diagram is shown for the de-energised condition.
- Connection of two pairs of safety light barrier devices
  When two pairs of safety light barriers are connected, the terminals X9-X10 and X11-X12 must be bridged.
- Restart push button Ⓡ
  The restart function can be selected by means of the DIPswitches. When a start push button is connected to X5 and X6, it must be operated for min. 250 ms and max. 5 s after an interruption of the safety light barriers.

Wiring diagram

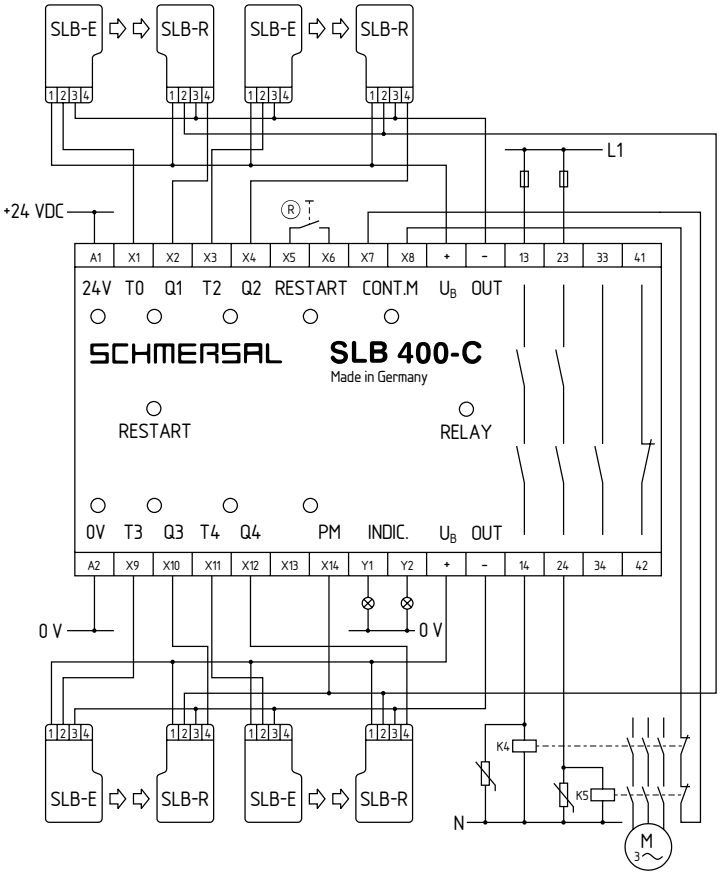

ISD

The following faults are registered by the safety monitoring modules and indicated by ISD

- Short-circuit on the connecting leads
- Interruption of the connecting leads
- Failure of the safety relay to pull-in or drop-out
- Fault on the input circuits or the relay control circuits of the safety monitoring module
- Mutual influence between the connected pairs of light barrier device and others on neighbouring systems

Note

The ISD tables (Intergral System Diagnostics) for analysis of the fault indications and their causes are shown in the manual.

Inductive loads (e.g. contactors, relays, etc.) are to be suppressed by means of a suitable circuit.

в Беларуси Заказ г.Минск viber и тел.+375447584780 email: minsk17@tut.by

Safety light barriers accessories SLB 200 and SLB 400

System components

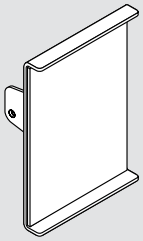

Mirror SLB 200/400 SMA 80

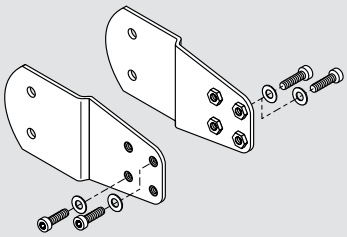

Mounting angle BF SMA 80-1

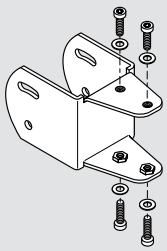

Mounting angle BF SMA 80-2

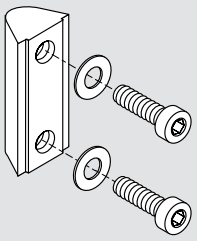

T-slot nut NST 20-8

System components

Mounting post ST 1250

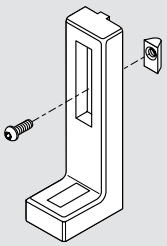

Floor-stand base STB 1

Ordering details

Mirror	**SMA 80**
Mounting angles for mirror	**BF SMA 80-1**
Mounting angles for mirror	**BF SMA 80-2**
T-slot nut	**NST 20-8**

Ordering details

Mounting post	**ST 1250**
Floor-stand base	**STB 1**

в Беларуси Заказ г.Минск viber и тел.+375447584780 email: minsk17@tut.by

Safety light curtains and safety light grids

System features:

- Type 2 and Type 4 to EN 61496
- Different integrated functionalities:
  - Start/restart interlock
  - Contactor control
  - Integrated double acknowledgment
  - Muting
  - Blanking
  - Master/Slave
- Diagnostics display
- Optical synchronisation
- Maintenance- free
- Compact design
- Simple, flexible mounting and adjustment

в Беларуси Заказ г.Минск viber и тел.+375447584780 email: minsk17@tut.by

Safety light curtains and safety light grids

SLC 220 standard

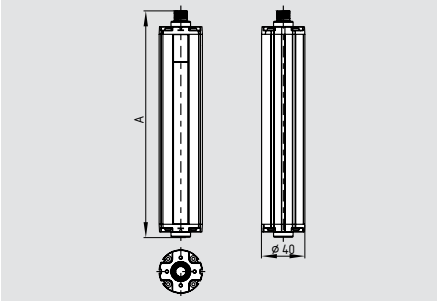

- **Safety light curtain**
- Type 2 to IEC/EN 61496-1, -2
- Resolution 30 and 80 mm
- Protection field heights 175 mm ... 1675 mm
- Integrated start/restart interlock
- Integrated contactor control
- Integrated blanking function
- Diagnostic and parametrization interface
- Range 0.3 m ... 14 m
- Integrated self-test
- Fail-safe transistor outputs
- Status display
- Protection class IP65
- Signalling output

Legend: A = Total lenght
Protection field height 175 mm
A = 216 mm
Protection field height 250 ... 1675 mm
A = 28.5 mm + Protection field height

Approvals

Ordering details

SLC 220-E/R①-②RFB-③

No.	Option	Description
①	xxxx	Protected heights (mm), available lengths: 0175*, 0250*, 0325, 0475, 0625, 0775, 0925, 1075, 1225, 1375, 1525, 1675
②	30, 80	Resolution 30, 80 mm
③		Range 0.3 m ... 6 m
	H	High Range 4 m ... 14 m

Note:
***** only for resolution 30 mm

SLG 220 standard

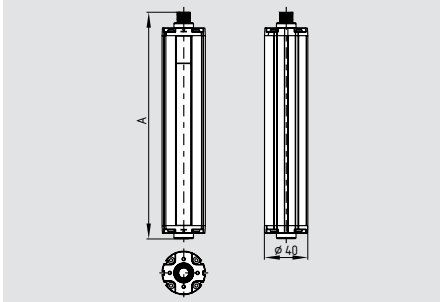

- **Safety light grid**
- 2-, 3- or 4-beam light grid
- Range 0.3 ... 30 m

Legend: A = Total lenght
A = 78.5 mm + Distance between outermost beams

Approvals

Ordering details

SLG 220-E/R①RF-②

No.	Option	Description
①		Distance between outermost beams:
	0500-02	500 mm, 2-beam
	0800-03	800 mm, 3-beam
	0900-04	900 mm, 4-beam
②		Range 0.3 m ... 6 m
	H	High Range 5 m ... 30 m

Mounting brackets are included in the delivery.

Note:
Converter for the parametrization NSR 0700

Technical data

Standards:	IEC/EN 61496-1/-2
Category:	Type 2
Enclosure:	aluminium
Enclosure dimensions:	Ø 40 mm
Connection:	Connector plug M12, 8-pole
Max. cable length:	100 m / 1Ω
Protection class:	IP65 to EN 60529
Response time:	9 … 45 ms (depends on length and resolution)
Detection sensitivity (Resolution):	30 and 80 mm
Protection field height:	
- Resolution 30 mm	175 ... 1675 mm
- Resolution 80 mm	325 ... 1675 mm
- 2-, 3-, 4-beam	500, 800, 900 mm
Protection field width, Range:	0.3 ... 6 m (Standard),
- SLC	4 ... 14 m (High range)
- SLG	5 ... 30 m (High range)
Start/restart interlock:	Integrated
Contactor control:	Integrated
Blanking function:	Integrated
Light emission wavelength:	880 nm (infrared)
U_e:	24 VDC ± 10%
Safety outputs:	2 x PNP, 200 mA
Signalling output:	PNP 100 mA
Power consumption:	Emitter 4 W, Receiver 8 W
Data interface:	RS 485
Status and diagnostics:	LED display
Ambient temperature:	−10 °C … +50 °C
Storage and transport temperature:	−20 °C … +70 °C
Classification:	
Standards:	EN ISO 13849-1; IEC 61508; IEC 60947-5-3
PL:	up to d
Category:	up to 2
PFH-value:	3.59 x 10^{-8}/h
SIL:	up to 2
Service life:	20 years

Ordering details

Connector:
Female connector M12, 8-pole straight
for emitter/receiver

cable length 5 m	**101207728**
cable length 10 m	**101207729**
cable length 20 m	**101207730**

в Беларуси Заказ г.Минск viber и тел.+375447584780 email: minsk17@tut.by

SLG 220-P

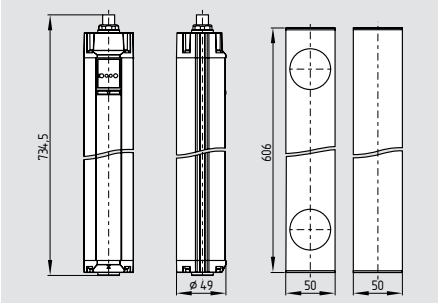

- **Safety light grid**
- Emitter and receiver in one enclosure (retro reflector)
- Type 2 to IEC/EN 61496-1, -2
- Protection field heights 500 mm
- 2-beam light grid
- Range 0.3 m ... 6 m
- Fail-safe transistor outputs
- Status display
- Protection class IP65

Technical data

Standards:	IEC/EN 61496-1/-2
Category:	Type 2
Enclosure:	aluminium
Enclosure dimensions:	Ø 40 mm
Deflecting mirror:	50 x 50 x 606 mm
Connection:	Connector plug M12, 8-pole
Max. cable length:	100 m / 1 Ω
Protection class:	IP65 to EN 60529
Response time:	12 ms
Detection sensitivity (Resolution):	500 mm
Protection field height:	500 mm
Protection field width, Range:	0.3 m ... 6 m
Light emission wavelength:	880 nm (infrared)
U_e:	24 VDC ± 10%
Safety outputs:	2 x PNP, 200 mA
Signalling output:	PNP, 100 mA
Power consumption:	10 W
Data interface:	-
Status and diagnostics:	LED display
Ambient temperature:	−10 °C … +50 °C
Storage and transport temperature:	−20 °C … +70 °C

Classification:

Standards:	EN ISO 13849-1; IEC 61508; IEC 60947-5-3
PL:	up to d
Category:	up to 2
PFH-value:	3.59 x 10^{-7}/h
SIL:	up to 2
Service life:	20 years

Technical data

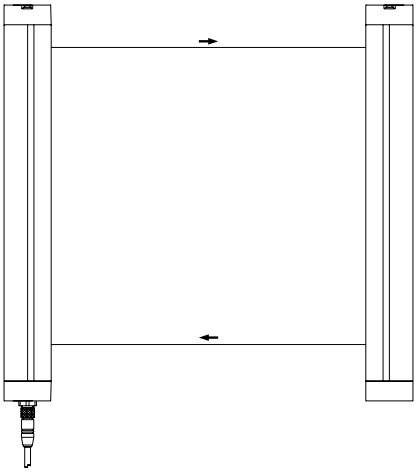

Approvals

TÜV cULus CE

Ordering details

SLG 220-P-E/R0500-02RF
ULS-P-0500

Note

Mounting brackets are included in the delivery.

Note:
Converter for the parametrization NSR 0700

Ordering details

Connector:
Female connector M12, 8-pole straight

cable length 5 m	**101207728**
cable length 10 m	**101207729**
cable length 20 m	**101207730**

в Беларуси Заказ г.Минск viber и тел.+375447584780 email: minsk17@tut.by

Safety light curtains and safety light grids

SLC 220 Master / Slave

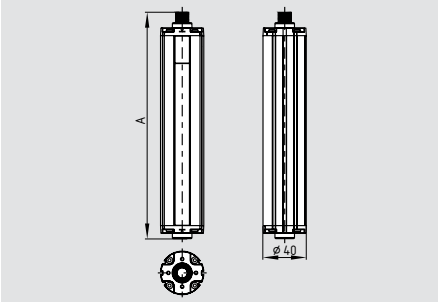

- **Safety light curtain**
- Type 2 to IEC/EN 61496-1, -2
- Resolution 30 and 80 mm
- Protection field height:
  Master 175 mm ... 1675 mm
  Slave 325 mm ... 775 mm
- Integrated start/restart interlock
- Integrated contactor control
- Diagnostic and parametrization interface
- Cascading of Master and Slave devices
- Range 0.3 m ... 6 m
- Fail-safe transistor outputs
- Status display
- Protection class IP65
- Signalling output
- Integrated self-test

Legend: A = Total lenght
Protection field height 175 mm
A = 216 mm
Protection field height 250 ... 1675 mm
A = 28.5 mm + Protection field height

Approvals

TÜV cULus CE

Technical data

Standards:	IEC/EN 61496-1/-2
Category:	Type 2
Enclosure:	aluminium
Enclosure dimensions:	Ø 40 mm
Connection:	Connector plug
- Master emitter:	M12, 8-pole
- Master receiver:	M12, 8-pole
- Slave emitter:	M12, 6-pole
- Slave receiver:	M12, 6-pole
Max. cable length:	100 m / 1Ω
Max. cable length: (Master/Slave)	0.3 m
Protection class:	IP65 to EN 60529
Response time:	12 … 65 ms (depends on length and resolution)
Detection sensitivity (Resolution):	30 and 80 mm
Protection field height:	
- Resolution 30 mm	175 ... 2450 mm
- Resolution 80 mm	325 ... 2450 mm
Protection field width, Range:	0.3 ... 6 m
Start/restart interlock:	Integrated
Contactor control:	Integrated
Cascading: (Master/Slave)	Possible
Light emission wavelength:	880 nm (infrared)
U_e:	24 VDC ± 10%
Safety outputs:	2 x PNP, 200 mA
Signalling output:	PNP, 100 mA
Power consumption:	Emitter 4 W, Receiver 8 W
Data interface:	RS 485
Status and diagnostics:	LED display
Ambient temperature:	−10 °C … +50 °C
Storage and transport temperature:	−20 °C … +70 °C

Classification:

Standards:	EN ISO 13849-1; IEC 61508; IEC 60947-5-3
PL:	up to d
Category:	up to 2
PFH-value:	3.59 x 10^{-8}/h
SIL:	up to 2
Service life:	20 years

System components

Connector

Ordering details

SLC 220-E/R①-②-RFB③

No.	Option	Description
①	xxxx	Protected heights (mm), available lengths: 0175*, 0250*, 0325, 0475, 0625, 0775, 0925, 1075, 1225, 1375, 1525, 1675
②	30, 80	Resolution 30, 80 mm
③	M	Master function
	S	Slave function**

Different lengths and resolutions can be combined for Master/Slave.

Mounting brackets are included in the delivery.

Ordering details

Note:
* only for resolution 30 mm
** only protected heights 325 mm ... 775 mm

Converter for the parametrization NSR 0700

Ordering details

Connector:
Female connector M12, 8-pole straight
for emitter/receiver

cable length 5 m	**101207728**
cable length 10 m	**101207729**
cable length 20 m	**101207730**

for Master/Slave Verbindung
Female connector 2 x M12, 6-pole straight

cable length 0.3 m	**KA-0907**

в Беларуси Заказ г.Минск viber и тел.+375447584780 email: minsk17@tut.by

Safety light curtains and safety light grids

SLC 220 IP69K

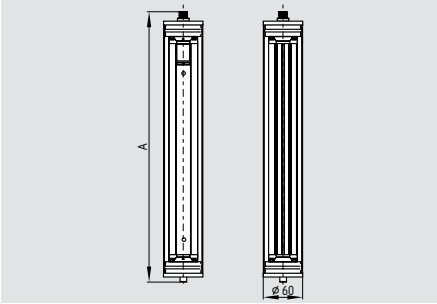

- **Safety light curtain**
- Type 2 to IEC/EN 61496-1, -2
- Resolution 30 and 80 mm
- Protection field heights 175 mm ... 1675 mm
- Protection class IP69K
- Integrated start/restart interlock
- Integrated contactor control
- Integrated blanking function
- Diagnostic and parametrization interface
- Range 0.3 m ... 14 m
- Integrated self-test
- Fail-safe transistor outputs
- Status display
- Signalling output

Legend: A = Total lenght
A = 54 mm + Protection field height

SLG 220 IP69K

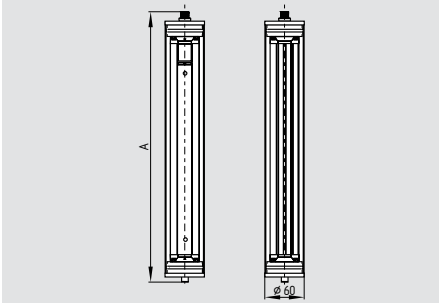

- **Safety light grid**
- 2-, 3- or 4-beam light grid
- Range 0.3 ... 30 m

Legend: A = Total lenght
A = 104 mm + Distance between outermost beams

Technical data

Standards:	IEC/EN 61496-1/-2
Category:	Type 2
Enclosure:	aluminium protective tube housing PMMA
Enclosure dimensions:	Ø 60 mm
Connection:	Cable (5 m) with connector M12, 8-pole
Max. cable length:	100 m / 1Ω
Protection class:	IP69K
Response time:	9 … 45 ms (depends on length and resolution)
Detection sensitivity (Resolution):	30 and 80 mm
Protection field height:	
- Resolution 30 mm	175 ... 1675 mm
- Resolution 80 mm	325 ... 1675 mm
- 2-, 3-, 4-beam	500, 800, 900 mm
Protection field width, Range:	0.3 ... 6 m (Standard),
- SLC	4 ... 14 m (High range)
- SLG	5 ... 30 m (High range)
Start/restart interlock:	Integrated
Contactor control:	Integrated
Blanking function:	Integrated
Light emission wavelength:	880 nm (infrared)
U_e:	24 VDC ± 10%
Safety outputs:	2 x PNP, 200 mA
Signalling output:	PNP, 100 mA
Power consumption:	Emitter 4 W, Receiver 8 W
Data interface:	RS 485
Status and diagnostics:	LED display
Ambient temperature:	−10 °C … +50 °C
Storage and transport temperature:	−20 °C … +70 °C

Classification:

Standards:	EN ISO 13849-1; IEC 61508; IEC 60947-5-3
PL:	up to d
Category:	up to 2
PFH-value:	3.59 x 10^{-8}/h
SIL:	up to 2
Service life:	20 years

Approvals

TÜV cULus CE

Ordering details

SLC 220-E/R①-②-69-RFB-③

No.	Option	Description
①	xxxx	Protected heights (mm), available lengths: 0175*, 0250*, 0325, 0475, 0625, 0775, 0925, 1075, 1225, 1375, 1525, 1675
②	30, 80	Resolution 30, 80 mm
③		Range 0.3 m ... 6 m
	H	High Range 4 m ... 14 m

Note:
* only for resolution 30 mm

Approvals

TÜV cULus CE

Ordering details

SLG 220-E/R①-69-RF-②

No.	Option	Description
①		Distance between outermost beams:
	0500-02	500 mm, 2-beam
	0800-03	800 mm, 3-beam
	0900-04	900 mm, 4-beam
②		Range 0.3 m ... 6 m
	H	High Range 5 m ... 30 m

Mounting brackets (**V4A**) are included in the delivery.

Note:
Converter for the parametrization NSR 0700

Ordering details

Connector:
Female connector M12, 8-pole straight

cable length 5 m	**101207728**
cable length 10 m	**101207729**
cable length 20 m	**101207730**

в Беларуси Заказ г.Минск viber и тел.+375447584780 email: minsk17@tut.by

Safety light curtains and safety light grids

SLC 420 standard

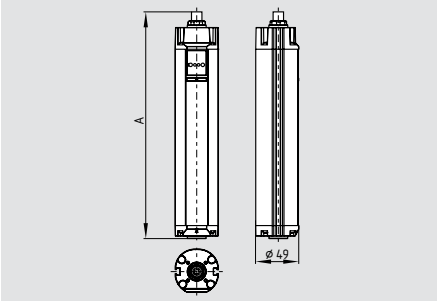

- **Safety light curtain**
- Type 4 to IEC/EN 61496-1, -2
- Resolution 14, 30 and 50 mm
- Protection field heights 170 mm ... 1770 mm
- Integrated start/restart interlock
- Integrated contactor control
- Integrated blanking function (fixed and mobile blanking)
- Diagnostic and parametrization interface
- Range 0.3 m ... 18 m
- Fail-safe transistor outputs
- Optical synchronisation
- Status display
- Protection class IP67

Legend: A = Total lenght
A = 84.5 mm + Protection field height

Approvals

SLG 420 standard

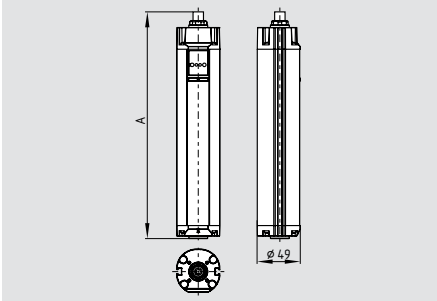

- **Safety light grid**
- 2-, 3- or 4-beam light grid
- Range 0.3 ... 40 m

Legend: A = Total lenght
2-beam A = 734.5 mm
3 and 4-beam A = 1054.5 mm

Approvals

Technical data

Standards:	IEC/EN 61496-1/-2
Category:	Type 4
Enclosure:	aluminium
Enclosure dimensions:	Ø 49 mm
Connection:	Connector plug
- Emitter:	M12, 4-pole,
- Receiver:	M12, 8-pole
Max. cable length:	100 m / 1 Ω
Protection class:	IP67 to EN 60529
Response time:	10 … 27 ms (depends on length and resolution)
Detection sensitivity (Resolution):	14, 30 and 50 mm
Protection field height:	
- Resolution 14 mm	170 ... 1450 mm
- Resolution 30, 50 mm	170 ... 1770 mm
- 2-, 3-, 4-beam	500, 800, 900 mm
Protection field width, Range:	
- Resolution 14 mm	0.3 m ... 7 m
- Resolution 30, 50 mm	0.3 m ... 10 m
- High Range/Resolution 30 mm	0.3 m ... 18 m
- 2-, 3-, 4-beam	0.3 m ... 18 m
- High Range 2-, 3-, 4-beam	8 m ... 40 m
Start/restart interlock:	Integrated
Contactor control:	Integrated
Blanking function:	Integrated
Cascading: (Master/Slave)	-
Light emission wavelength:	880 nm (infrared)
U_e:	24 VDC ± 10%
Safety outputs:	2 x PNP, 500 mA
Power consumption:	Emitter 4 W, Receiver 8 W
Data interface:	RS 485
Status and diagnostics:	LED display
Ambient temperature:	−10 °C … +50 °C
Storage and transport temperature:	−20 °C … +70 °C
Classification:	
Standards:	EN ISO 13849-1; IEC 61508; IEC 60947-5-3
PL:	up to e
Category:	up to 4
PFH-value:	7.42 x 10^{-9}/h
SIL:	up to 3
Service life:	20 years

Ordering details

SLC 420-E/R①-②-RFB-③

No.	Option	Description
①	xxxx	Protected heights (mm) available lengths: 0170, 0250, 0330, 0410, 0490, 0570, 0650, 0730, 0810, 0890, 0970, 1050,1130, 1210, 1290, 1370, 1450, 1530*, 1610*, 1690*,1770*
②	14, 30, 50	Resolution 14, 30, 50 mm
③		Range 0.3 m ... 7 m**
		Range 0.3 m ... 10 m *
	H	High Range* 0.3 m ... 18 m***

Ordering details

SLG 420-E/R①-RF-②

No.	Option	Description
①	Distance between outermost beams:	
	0500-02	500 mm, 2-beam
	0800-03	800 mm, 3-beam
	0900-04	900 mm, 4-beam
②		Range 0.3 m ... 18 m
	H	Range 8 m ... 40 m

Mounting brackets are included in the delivery.

Note:
***** only for resolution 30 mm, 50 mm
****** only for resolution 14 mm
******* only for resolution 30 mm

Converter for the parametrization NSR 0801

Ordering details

Connector:
Female connector M12, 4-pole straight
for emitter

cable length 5 m	**101207741**
cable length 10 m	**101207742**
cable length 20 m	**101207743**

Female connector M12, 8-pole straight
for receiver

cable length 5 m	**101207728**
cable length 10 m	**101207729**
cable length 20 m	**101207730**

в Беларуси Заказ г.Минск viber и тел.+375447584780 email: minsk17@tut.by

SLC 420 Master / Slave

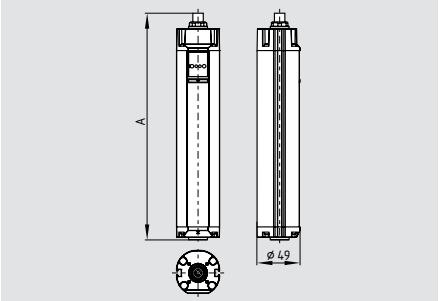

- **Safety light curtain**
- Type 4 to IEC/EN 61496-1, -2
- Resolution 14, 30 and 50 mm
- Protection field height:
  Master 170 mm ... 1770 mm
  Slave 170 mm ... 650 mm
- Integrated start/restart interlock
- Integrated contactor control
- Integrated blanking function
- Diagnostic and parametrization interface
- Cascading of Master and Slave devices
- Range 0.3 m ... 18 m
- Fail-safe transistor outputs
- Optical synchronisation
- Status display

Legend: A = Total lenght
A = 84.5 mm + Protection field height

Technical data

Standards:	IEC/EN 61496-1/-2
Category:	Type 4
Enclosure:	aluminium
Enclosure dimensions:	Ø 49 mm
Connection:	Connector plug
- Master emitter:	M12, 4-pole
- Master receiver:	M12, 8-pole
- Slave emitter:	M12, 4-pole
- Slave receiver:	M12, 8-pole
Max. cable length:	100 m / 1 Ω
Max. cable length: (Master/Slave)	0.8 m
Protection class:	IP67 to EN 60529
Response time:	10 … 37 ms (Depends on length and resolution)
Detection sensitivity (Resolution):	14, 30 and 50 mm
Protection field height:	
- Resolution 14 mm	170 ... 2100 mm
- Resolution 30, 50 mm	170 ... 2420 mm
Protection field width, Range:	
- Resolution 14 mm	0.3 m ... 7 m
- Resolution 30, 50 mm	0.3 m ... 10 m
- High Range	0.3 m ... 18 m
Start/restart interlock:	Integrated
Contactor control:	Integrated
Blanking function:	Integrated
Cascading: (Master/Slave)	Possible
Light emission wavelength:	880 nm (infrared)
U_e:	24 VDC ± 10%
Safety outputs:	2 x PNP, 500 mA
Power consumption:	Emitter 4 W, Receiver 8 W
Data interface:	RS 485
Status and diagnostics:	LED display
Ambient temperature:	−10 °C … +50 °C
Storage and transport temperature:	−20 °C … +70 °C

Classification:

Standards:	EN ISO 13849-1; IEC 61508; IEC 60947-5-3
PL:	up to e
Category:	up to 4
PFH-value:	7.42 x 10^{-9}/h
SIL:	up to 3
Service life:	20 years

System components

Connector

Approvals

TÜV cULus CE

Ordering details

SLC 420-E/R①-②-RFB-③④

No.	Option	Description
①	xxxx	Protected heights (mm) available lengths: 0170, 0250, 0330, 0410, 0490, 0570, 0650, 0730, 0810, 0890, 0970, 1050, 1130, 1210, 1290, 1370, 1450, 1530*, 1610*, 1690*, 1770*
②	14, 30, 50	Resolution 14, 30, 50 mm
③		Range 0.3 m ... 7 m**
		Range 0.3 m ... 10 m*
	H**	High Range 0.3 m ... 18 m**

Ordering details

SLC 420-E/R①-②-RFB-③④

No.	Option	Description
④	M	Master function
	S***	Slave function

Mounting brackets are included in the delivery.

Note:
* only for resolution 30 mm
** only for resolution 30 and 50 mm
*** Protection field heights 170 ... 650 mm

Converter for the parametrization NSR 0801

Ordering details

Connector:
Female connector M12, 4-pole straight
for emitter

cable length 5 m	**101207741**
cable length 10 m	**101207742**
cable length 20 m	**101207743**

Female connector M12, 8-pole straight
for receiver

cable length 5 m	**101207728**
cable length 10 m	**101207729**
cable length 20 m	**101207730**

for Master/Slave connection:
Female connector M12, 4-pole straight
for emitter cable length 0.8 m **101207744**
Female connector M12, 8-pole straight
for receiver cable length 0.8 m **101207749**

в Беларуси Заказ г.Минск viber и тел.+375447584780 email: minsk17@tut.by

Safety light curtains and safety light grids

SLC 420 IP69K

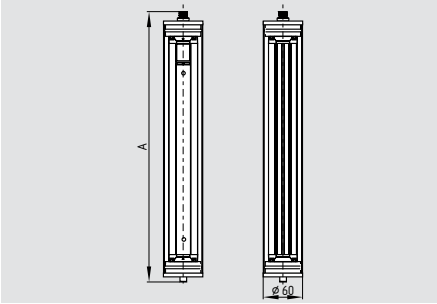

- **Safety light curtain**
- Type 4 to IEC/EN 61496-1, -2
- Resolution 14 mm, 30 mm
- Protection field heights 170 mm ... 1450 mm
- Protection class IP69K
- Integrated start/restart interlock
- Integrated contactor control
- Integrated blanking function (fixed and mobile blanking)
- Diagnostic and parametrization interface
- Range 0.3 m ... 10 m
- Fail-safe transistor outputs
- Optical synchronisation
- Status display

Legend: A = Total lenght
A = 97 mm + Protection field height

Approvals

TÜV cULus CE

Ordering details

SLC 420-E/R①-②-69-RFB

No.	Option	Description
①	xxxx	Protected heights (mm) available lengths: 0170, 0250, 0330, 0410, 0490, 0570, 0650, 0730, 0810, 0890, 0970, 1050, 1130, 1210, 1290, 1370, 1450
②	14	Resolution 14 mm with a range of 0.3 m ... 7 m
	30	Resolution 30 mm with a range of 0.3 m ... 10 m

SLG 420 IP69K

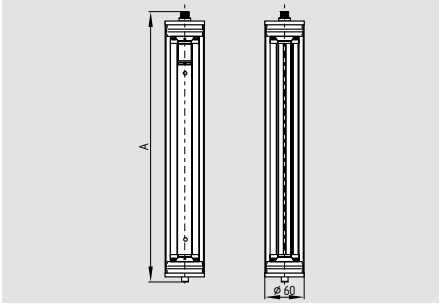

- **Safety light grid**
- 2-, 3- or 4-beam light grid
- Range 0.3 ... 18 m

Legend: A = Total lenght
2-beam A = 747 mm
3 and 4-beam A = 1067 mm

Approvals

TÜV cULus CE

Ordering details

SLG 420-E/R①-69-RF

No.	Option	Description
①	Distance between outermost beams:	
	0500-02	500 mm, 2-beam
	0800-03	800 mm, 3-beam
	0900-04	900 mm, 4-beam

Mounting brackets (**V4A**) are included in the delivery.

Note:
Converter for the parametrization NSR 0801

Technical data

Standards:	IEC/EN 61496-1/-2
Category:	Type 4
Enclosure:	aluminium protective tube housing PMMA
Enclosure dimensions:	Ø 60 mm
Connection:	Cable (5 m) with
- Receiver	connector M12, 8-pole
- Emitter	connector M12, 4-pole
Max. cable length:	100 m / 1 Ω
Protection class:	IP69K to EN 60529
Response time:	10 … 27 ms (depends on length and resolution)
Detection sensitivity (Resolution):	14, 30 mm
Protection field height:	
- Resolution 14, 30 mm	170 ... 1450 mm
- 2-, 3-, 4-beam	500, 800, 900 mm
Protection field width, Range:	
- Resolution 14 mm	0.3 m ... 7 m
- Resolution 30 mm	0.3 m ... 10 m
- 2-, 3-, 4-beam	0.3 m ... 18 m
Start/restart interlock:	Integrated
Contactor control:	Integrated
Blanking function:	Integrated
Cascading: (Master/Slave)	-
Light emission wavelength:	880 nm (infrared)
U_e:	24 VDC ± 10%
Safety outputs:	2 x PNP, 500 mA
Power consumption:	Emitter 4 W, Receiver 8 W
Data interface:	RS 485
Status and diagnostics:	LED display
Ambient temperature:	−10 °C … +50 °C
Storage and transport temperature:	−20 °C … +70 °C
Classification:	
Standards:	EN ISO 13849-1; IEC 61508; IEC 60947-5-3
PL:	up to e
Category:	up to 4
PFH-value:	7.42 x 10^{-9}/h
SIL:	up to 3
Service life:	20 years

в Беларуси Заказ г.Минск viber и тел.+375447584780 email: minsk17@tut.by

SLG 422-P

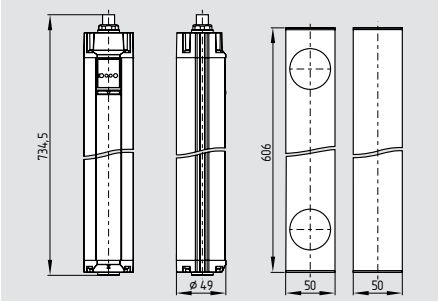

- **Safety light grid**
- Emitter and receiver in one enclosure (retro reflector)
- Type 4 to IEC/EN 61496-1, -2
- Protection field heights 500 mm
- 2-beam light grid
- Integrated start/restart interlock
- Integrated contactor control
- Range 0.3 m ... 7 m
- Fail-safe transistor outputs
- Status display
- Protection class IP67

Technical data

Standards:	IEC/EN 61496-1/-2
Category:	Type 4
Enclosure:	aluminium
Enclosure dimensions:	Ø 49 mm
Deflecting mirror:	50 x 50 x 606 mm
Connection:	Connector plug M12, 8-pole
Max. cable length:	100 m / 1 Ω
Protection class:	IP67 to EN 60529
Response time:	10 ms
Detection sensitivity (Resolution):	500 mm
Protection field height:	500 mm
Protection field width, Range:	0.3 m ... 7 m
Start/restart interlock:	Integrated
Contactor control:	Integrated
Light emission wavelength:	880 nm (infrared)
U_e:	24 VDC ± 10%
Safety outputs:	2 x PNP, 500 mA
Power consumption:	10 W
Data interface:	-
Status and diagnostics:	LED display
Ambient temperature:	−10 °C … +50 °C
Storage and transport temperature:	−20 °C … +70 °C

Classification:

Standards:	EN ISO 13849-1; IEC 61508; IEC 60947-5-3
PL:	up to e
Category:	up to 4
PFH-value:	7.42 x 10^{-9}/h
SIL:	up to 3
Service life:	20 years

Technical data

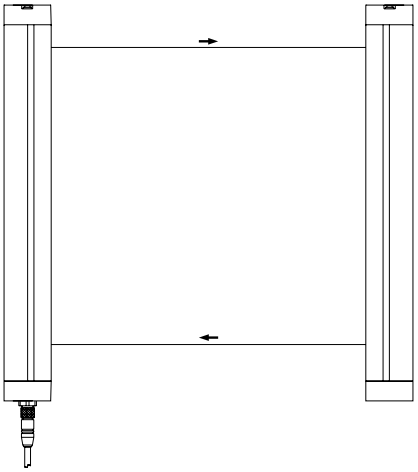

Approvals

TÜV cULus CE

Ordering details

SLG 422-P-E/R0500-02-RF
ULS-P-0501

Note

Mounting brackets are included in the delivery.

Note:
Converter for the parametrization NSR 0801

Ordering details

Connector:
Female connector M12, 8-pole straight

cable length 5 m	**101207728**
cable length 10 m	**101207729**
cable length 20 m	**101207730**

в Беларуси Заказ г.Минск viber и тел.+375447584780 email: minsk17@tut.by

SLC 430

- **Safety light curtain**
- Type 4 to IEC/EN 61496-1, -2
- Resolution 30 mm
- Protection field heights 236 mm ... 1804 mm
- Slim design, size 12 x 20 mm
- Integrated start/restart interlock
- Integrated contactor control
- Range 0.3 m ... 3.5 m*
- Status display
- Protection class IP65

NSR-0605

Enclosure dimensions:	240 x 160 mm

Technical data

Standards:	IEC/EN 61496-1/-2
Category:	Type 4 in combination with evaluation unit NSR-0605
Enclosure:	aluminium
Enclosure dimensions:	12 x 20 mm
Connection:	Connector plug M12, 4-pole
Max. cable length:	100 m / 1 Ω
Protection class:	IP65 to EN 60529
Response time including relay output:	50 ms
Detection sensitivity (Resolution):	30 mm
Protection field height:	236 ... 1804 mm
Protection field width, Range*:	0.3 m ... 3.5 m
Start/restart interlock:	Integrated
Contactor control:	Integrated
Light emission wavelength:	880 nm (infrared)
U_e:	22 ... 30 VDC 18 ... 25 VAC
Power consumption:	8 W

System:

Data interface:	RS 485
Status and diagnostics:	LED display
Ambient temperature:	0 °C … +50 °C
Storage and transport temperature:	−10 °C … +70 °C
Safety outputs:	2 x Relay contact 250 V / 4 A
Signalling output:	1 x Relay contact 42 V / 4 A

Classification:

Standards:	EN ISO 13849-1; IEC 61508; IEC 60947-5-3
PL:	up to e
Category:	up to 4
PFH-value:	1.26 x 10^{-8}/h
SIL:	up to 3
Service life:	20 years

Approvals

TÜV cSPus CE

Ordering details

SLC 430-E/R①-30-RF-SYS

No.	Option	Description
①	xxxx	Protected heights (mm) available lengths: 0236, 0460, 0684, 0908, 1132, 1356, 1580, 1804

Note:
* Range up to 5 m upon request

Ordering details

Included in delivery:
- Emitter and receiver including mounting set
- Evaluation unit **NSR-0605**,
- Connector set (cable length 5 m) **101207718**

Ordering details

Connector:
Female connector M8, 4-pole straight
for emitter/receiver

cable length 5 m	**101207718**
cable length 10 m	**101207719**

в Беларуси Заказ г.Минск viber и тел.+375447584780 email: minsk17@tut.by

Safety light curtains with integrated muting-, blanking- and Cyclic-function

System features:

- Type 4 to IEC 61496
- Integrated muting function
- Muting sensors can be directly connected
- Integrated override function
- Integrated cyclic operation function
- Diagnostics display
- Optical synchronisation
- Compact design
- Simple, flexible mounting and adjustment

в Беларуси Заказ г.Минск viber и тел.+375447584780 email: minsk17@tut.by

Safety light curtains with integrated muting-, blanking- and Cyclic-function

SLC/SLG 425I

The SLC/SLG 415I is a system for universal use with integrated muting function. The M8 connectors allow a direct connection and flexible positioning of the different muting sensors (e.g. inductive, capacitive or optical sensors). In this way, a safe triggering of the muting function can be obtained for objects of different sizes. The additional integrated override function allows for a controlled restart of the machine to transport the accumulated material out of the protection field after a failure. The safety light curtains/grids with muting function enable a smooth and trouble-free material feeding (input and output), whilst offering a permanent protection of human life.

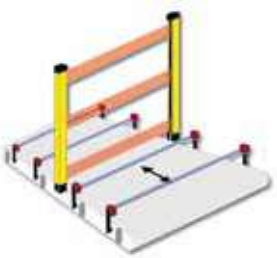

- Integrated muting function for material transport in 1 or 2 directions
- Connection of 2 or 4 external muting sensors
- Connection of different muting sensors
- Direct connection (M8) of the muting sensors to the SLC/SLG
- Muting controller for crosswise or parallel arrangement of the external sensors
- Adjustable muting time of 30 s, 90 min or 100 h
- Integrated override function
- Range up to 18 m

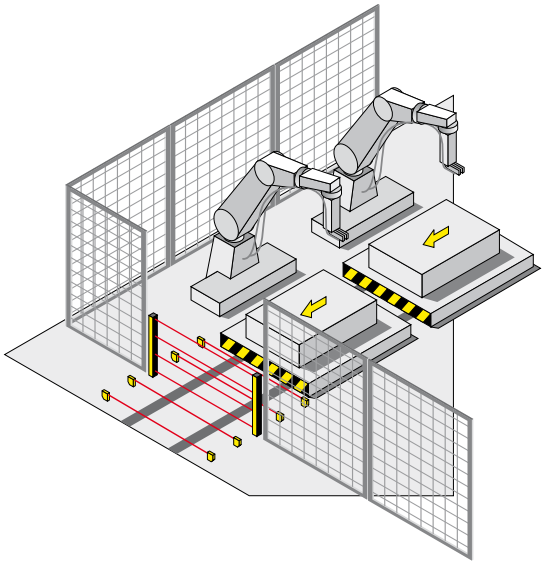

в Беларуси Заказ г.Минск viber и тел.+375447584780 email: minsk17@tut.by

Safety light curtains with integrated muting-, blanking- and Cyclic-function

SLC 425I

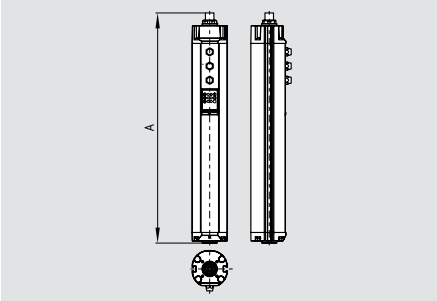

- **Safety light curtain**
- Type 4 to IEC/EN 61496-1, -2
- Resolution 14 and 30 mm
- Protection field heights 170 mm ... 1770 mm
- Integrated start/restart interlock
- Integrated contactor control
- Integrated muting and override function
- Integrated blanking function (fixed and mobile blanking)
- Cyclic operation (1 ... 8 Cycles)
- Range 0.3 ... 10 m
- Fail-safe transistor outputs
- Optical synchronisation
- Status display
- Different muting sequences can be parameterized
- Protection class IP67

Legend: A = Total lenght
Emitter:
A = 84.5 mm + Protection field height
Receiver:
A = 148.5 mm + Protection field height

Approvals

SLG 425I

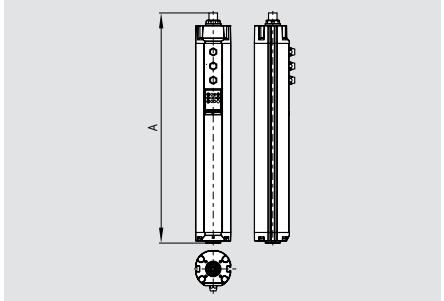

- **Safety light grid**
- 2-, 3-, 4-beam light grid
- Protection field heights 500, 800 or 900 mm
- Range 0.3 ... 18 m

Legend: A = Total lenght
Emitter:
2-beam A = 804 mm
3 and 4-beam A = 1124 mm
Receiver:
2-beam A = 868 mm
3 and 4-beam A = 1188 mm

Approvals

Technical data

Standards:	IEC/EN 61496-1/-2
Category:	Type 4
Enclosure:	aluminium
Enclosure dimensions:	Ø 49 mm
Connection:	Connector plug
- Emitter:	M12, 4-pole,
- Receiver:	M12, 8-pole,
- Muting sensors:	2 x connector plugs M8, 3-pole
- Muting lamp:	M8, 3-pole
Max. cable length:	100 m / 1 Ω
Protection class:	IP67 to EN 60529
Response time:	7 … 28.5 ms (Depends on length and resolution)
Detection sensitivity (Resolution):	14 and 30 mm
Protection field height:	
- Resolution 14 mm	170 ... 1450 mm
- Resolution 30 mm	170 ... 1770 mm
- 2-, 3-, 4-beam	500, 800, 900 mm
Protection field width, Range:	
- Resolution 14 mm	0.3 m ... 7 m
- Resolution 30 mm	0.3 m … 10 m
- 2-, 3-. 4-beam	0.3 m ... 18 m
Start/restart interlock:	Integrated
Contactor control:	Integrated
Muting and override function:	Integrated
Muting sensors:	2 or 4 external sensors
Light emission wavelength:	880 nm (infrared)
U_e:	24 VDC ± 10%
Safety outputs:	2 x PNP, 500 mA
Power consumption:	Emitter 4 W, Receiver 8 W
Data interface:	RS 485
Status and diagnostics:	LED display
Ambient temperature:	−10 °C … +50 °C
Storage and transport temperature:	−20 °C … +70 °C

Classification:

Standards:	EN ISO 13849-1; IEC 61508; IEC 60947-5-3
PL:	up to e
Category:	up to 4
PFH-value:	7.42 x 10^{-9}/h
SIL:	up to 3
Service life:	20 years

Ordering details

SLC 425I-E/R①-②-RFBC

No.	Option	Description
①	xxxx	Protected heights (mm) available lengths: 0170, 0250, 0330, 0410, 0490, 0570, 0650, 0730, 0810, 0890, 0970, 1050, 1130, 1210, 1290, 1370, 1450, 1530*, 1610*, 1690*, 1770*
②	14, 30	Resolution 14 mm, 30 mm

Ordering details

SLG 425I-E/R①-RF

No.	Option	Description
①	Distance between outermost beams:	
	0500-02	500 mm, 2-beam
	0800-03	800 mm, 3-beam
	0900-04	900 mm, 4-beam

Mounting brackets are included in the delivery.

Note:
* only for resolution 30 mm

Converter for the parametrization NSR 0801

Ordering details

Connector:
Female connector M12, 4-pole straight
for emitter

cable length 5 m	**101207741**
cable length 10 m	**101207742**
cable length 20 m	**101207743**

Female connector M12, 8-pole straight
for receiver

cable length 5 m	**101207728**
cable length 10 m	**101207729**
cable length 20 m	**101207730**

Connecting cabel for the muting sensors

M8, 3-pole to M12, 4-pole, 2 m	**101210312**

в Беларуси Заказ г.Минск viber и тел.+375447584780 email: minsk17@tut.by

Safety light grids with integrated muting-function

SLG 425-IP

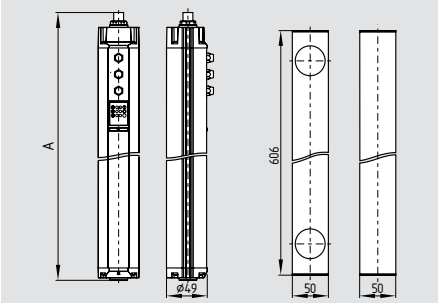

- **Safety light grid**
- Emitter and receiver in one enclosure (retro reflector)
- Type 4 to IEC/EN 61496-1, -2
- Protection field heights 500 mm
- 2-beam light grid
- Integrated start/restart interlock
- Integrated muting and override function
- Range 0.3 m ... 7 m
- Fail-safe transistor outputs
- Status display
- Protection class IP67

Technical data

Standards:	IEC/EN 61496-1/-2
Category:	Type 4
Enclosure:	aluminium
Enclosure dimensions:	Ø 49 mm
Deflecting mirror:	50 x 50 x 606 mm
Connection:	Connector plug
- emitter/receiver:	M12, 8-pole
Max. cable length:	100 m / 1 Ω
Protection class:	IP67 to EN 60529
Response time:	15 ms
Detection sensitivity (Resolution):	500 mm
Protection field height:	500 mm
Protection field width, Range:	0.3 m ... 7 m
Start/restart interlock:	Integrated
Light emission wavelength:	880 nm (infrared)
U_e:	24 VDC ± 10%
Safety outputs:	2 x PNP, 500 mA
Power consumption:	10 W
Data interface:	RS 485
Status and diagnostics:	LED display
Ambient temperature:	−10 °C … +50 °C
Storage and transport temperature:	−20 °C … +70 °C

Classification:

Standards:	EN ISO 13849-1; IEC 61508; IEC 60947-5-3
PL:	up to e
Category:	up to 4
PFH-value:	7.42 x 10^{-9}/h
SIL:	up to 3
Service life:	20 years

Technical data

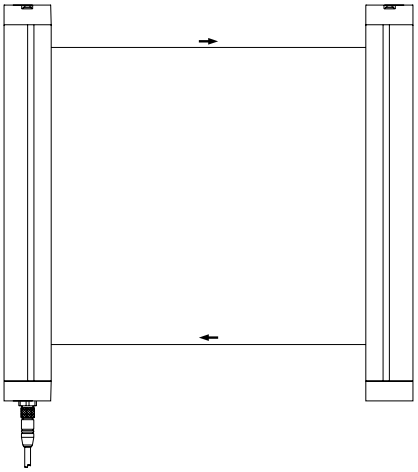

Approvals

TÜV cULus CE

Ordering details

SLG 425IP-E/R0500-02-RF
ULS-P-0501

Note

Mounting brackets are included in the delivery.

Note
Converter for the parametrization NSR 0801

Ordering details

Connector:
Female connector M12, 8-pole straight

cable length 5 m	**101207728**
cable length 10 m	**101207729**
cable length 20 m	**101207730**

в Беларуси Заказ г.Минск viber и тел.+375447584780 email: minsk17@tut.by

Safety light curtains with integrated diagnostics and parameter setting

SLC 440

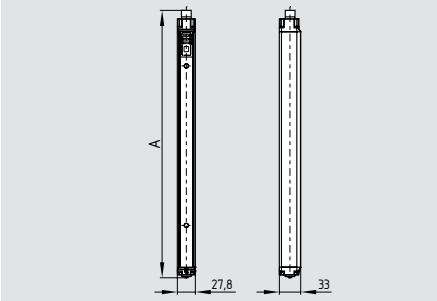

- **Safety light curtain**
- Type 4 to EN 61496-1, CLC/TS 61496-2
- Resolution 14 and 30 mm
- Protection field heights 170 mm ... 1770 mm
- Integrated start/restart interlock
- Integrated contactor control
- Integrated blanking function (fixed and mobile blanking)
- Diagnostic and parametrization interface
- Range 0,3 m ... 10 m
- Fail-safe transistor outputs
- Optical synchronisation
- LED Status display, 7-segment display
- Protection class IP67

Legend: A = Total lenght
A = 81 mm + Protection field height

Approvals

Ordering details

SLC 440-E/R①-②-01

No.	Option	Description
①	xxxx	Protected heights (mm) available lengths: 0170, 0250, 0330, 0410, 0490, 0570, 0650, 0730, 0810, 0890, 0970, 1050, 1130, 1210, 1290*, 1370*, 1450*, 1530*, 1610*, 1690*, 1770*
②	14	Resolution 14 mm with a range of 0.3 m ... 7 m
	30	Resolution 30 mm with a range of 0.3 m ... 10 m

-01 = integrated status indication (option)
* only for resolution 30 mm

SLG 440

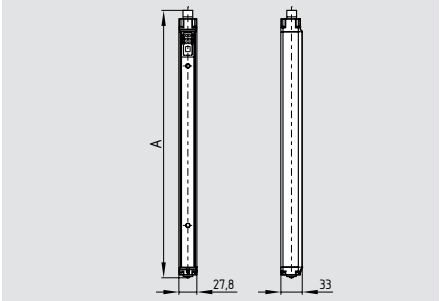

- **Safety light grid**
- 2-, 3- or 4-beam light grid
- Range 0,3 ... 12 m

Legend: A = Total lenght
2-beam A = 610 mm
3-beam A = 910 mm
4-beam A = 1010 mm

Approvals

Ordering details

SLG 440-E/R①-01

No.	Option	Description
①	Distance between outermost beams:	
	0500-02	500 mm, 2-beam
	0800-03	800 mm, 3-beam
	0900-04	900 mm, 4-beam
		Range 0.3 … 12 m

-01 = integrated status indication (option)

Technical data

Standards:	EN 61496-1; CLC/TS 61496-2
Category:	Type 4
Enclosure:	aluminium
Enclosure dimensions:	27.8 x 33 mm
Connection:	Connector plug
- Emitter:	M12, 4-pole,
- Receiver:	M12, 8-pole
Max. cable length:	100 m / 1 Ω
Protection class:	IP67 to EN 60529
Response time:	10 … 27 ms (depends on length and resolution)
Detection sensitivity (Resolution):	14 and 30 mm
Protection field height:	
- Resolution 14 mm	170 ... 1210 mm
- Resolution 30 mm	170 ... 1770 mm
- 2-, 3-, 4-beam	500, 800, 900 mm
Protection field width, Range:	
- Resolution 14 mm	0.3 m ... 7 m
- Resolution 30 mm	0.3 m ... 10 m
- 2-, 3-, 4-beam	0.3 m ... 12 m
Start/restart interlock:	Integrated
Contactor control:	Integrated
Blanking function:	Integrated
Light emission wavelength:	880 nm (infrared)
U_e:	24 VDC ± 10%
Safety outputs:	2 x PNP, 250 mA
Power consumption:	Emitter 1,8 W, Receiver 3,8 W
Status and diagnostics:	LED-, 7-segment display
Ambient temperature:	−10 °C … +50 °C
Storage and transport temperature:	−25 °C … +70 °C
Classification:	
Standards:	EN ISO 13849-1; EN 62061
PL:	up to e
Category:	up to 4
PFH-value:	
- SLC 440	11,4 x 10^{-9} /h
- SLG 440	8,14 x 10^{-9} /h
SIL:	up to 3
Service life:	20 years

Ordering details

Connector:
Female connector M12, 4-pole straight
for emitter

cable length 5 m	**101207741**
cable length 10 m	**101207742**
cable length 20 m	**101207743**

Female connector M12, 8-pole straight
for receiver

cable length 5 m	**101207728**
cable length 10 m	**101207729**
cable length 20 m	**101207730**

Cable for the parametrization

cable length 1 m	**101217615**

в Беларуси Заказ г.Минск viber и тел.+375447584780 email: minsk17@tut.by

Safety light curtains and safety light grids – accessories

System components

Programming cable KA-0974

Alignment kit EA-5

Muting lamp with wall bracket MK2

Mounting kit MS-1000 / MS 1072

System components

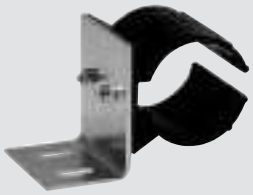

Mounting kit MS-1010

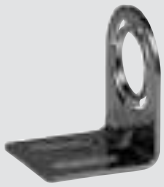

Mounting kit MS-1031 for ULS-A4

Mounting kit MS-1035

Mounting kit MS-1051

System components

Mounting kit MS-1073

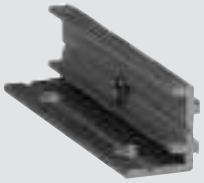

Mounting kit MS-690

Vibration damper MSD-2 / MSD-4

Test rod PLS-01, PLS-02

Ordering details

Programming cable
for SLC/SLG 440 **KA-0974**
Laser alignment tool
for SLC / SLG 220 **EA5**
for SLC /SLG 420-425 **EA5**
Lighting element
Muting lamp with LED block **MK2**
Operating conditions indication
Mounting kit for SLC /SLG 220
4 x angle incl. screws **MS-1000**
2 x angle incl. screws **MS-1072**

Ordering details

Mounting kit for central fixation for SLC /SLG 220
2 x angle **MS-1010**
Mounting kit for ULS-A4
2 x angle incl. screws **MS-1031**
MS-1035 Mounting kit for SLC/SLG 420-425 (V4A)
4 x angle incl. screws **MS-1035**
Mounting kit for lateral fixation for SLC/SLG 420-425
Consisting of 2 steel angles, 4 screws and 4 T-slot nuts **MS-1051**

Ordering details

Mounting kit for deflecting mirror ULS-M
2 x angle **MS-1073**
Mounting kit for SLC 430
2 x clamping profile **MS-690**
Vibration damper
8 x vibration damper for SLC/SLG 220 **MSD-2**
8 x vibration damper for SLC/SLG 420-425 and for SLC/SLG 440 **MSD-4**
Test rod
for resolution 30 mm **PLS-01**
for resolution 14 mm **PLS-02**

в Беларуси Заказ г.Минск viber и тел.+375447584780 email: minsk17@tut.by

Safety light curtains and safety light grids – accessories

System components

Bus converter NSR-0801

Bus converter NSR-0700

Deflecting mirror ULS-M

System components

Deflecting mirror ULS-A4, Ø 49 mm

Mounting stands MST

Muting Carrier Set

System components

Protective enclosure with deflecting mirror

Protective enclosure for light grids SG

Ordering details

Bus converter

Converter for the parametrization of SLC/SLG 420-425 USB 2.0 interface	**NSR 0801**
Converter for the parametrization of SLC / SLG 220 RS232 interface	**NSR 0700**

Deflecting mirror ULS-M incl. mounting angle

Mirror height 350 mm	**ULS-M-0350**
Mirror height 500 mm	**ULS-M-0500**
Mirror height 650 mm	**ULS-M-0650**
Mirror height 800 mm	**ULS-M-0800**
Mirror height 950 mm	**ULS-M-0950**
Mirror height 1250 mm	**ULS-M-1250**
Mirror height 1550 mm	**ULS-M-1550**
Mirror height 1700 mm	**ULS-M-1700**

Ordering details

Deflecting mirror ULS-A4 incl. mounting angle

Mirror height 200 mm	**ULS-A4-0200**
Mirror height 400 mm	**ULS-A4-0400**
Mirror height 550 mm	**ULS-A4-0550**
Mirror height 700 mm	**ULS-A4-0700**
Mirror height 850 mm	**ULS-A4-0850**
Mirror height 1000 mm	**ULS-A4-1000**

Mounting stands

Height including plinth 500 mm	**MST-0500**
Height including plinth 750 mm	**MST-0750**
Height including plinth 1000 mm	**MST-1000**
Height including plinth 1250 mm	**MST-1250**
Height including plinth 1500 mm	**MST-1500**
Height including plinth 1750 mm	**MST-1750**
Height including plinth 2000 mm	**MST-2000**

Muting Carrier Set

2 x aluminium profile	**MT-0400**

Ordering details

Protective enclosure with deflecting mirror

Version for 2-beam light grid	**ULS-ST2**
Version for 3-beam light grid	**ULS-ST3**
Version for 4-beam light grid	**ULS-ST4**

Protective enclosure for light grids SLG

Height 1334 mm hot-dip galvanised	**SG2**
Height 1334 mm RAL 1021	**SG4**

в Беларуси Заказ г.Минск viber и тел.+375447584780 email: minsk17@tut.by

Reflection light sensor (Muting sensor)

LF 50-11P

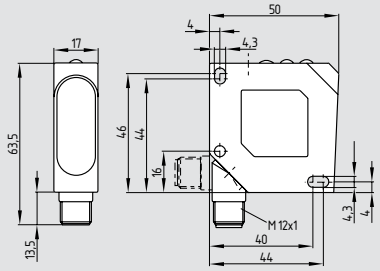

- Range up to 5.5 m
- Connector plug can be rotated
- LED status display
- Protection class IP67
- Infrared light 660 nm
- Laser protection class 1
- Polarisation filter
- Antivalent switching outputs

Approvals

CE

Technical data

Standards:	EN 60974-5-2
Laser protection class 1	EN 60825-1-10/03
Enclosure:	ABS
Enclosure dimensions:	50 x 50 x 17 mm
Connection:	Connector plug M12, 4-pole, can be rotated
Max. cable length:	100 m
Protection class:	IP67
Switching frequency:	2500 Hz
Range:	0 ... 5.5 m
Infrared laser light:	660 nm
U_e:	10 ... 30 VDC
Switching output:	2 x PNP 200 mA
Beam diameter:	5 ... 24 mm
LED status display:	soiling, switching condition and power on
Ambient temperature:	−20 °C ... +60 °C
Storage and transport temperature:	−20 °C ... +80 °C

System components

Reflector R 51 x 61-L

Reflector R D83

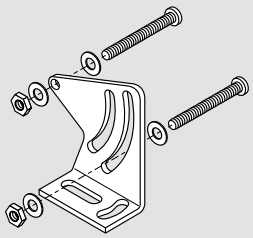

Mounting angle BF 50

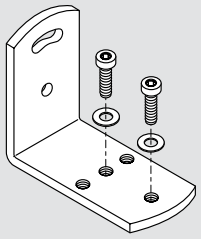

Mounting angle BF UNI 1

Ordering details

LF 50-11P

Note:
System components (cables, mounting angles, etc.) not included in the delivery.

Ordering details

Connector	
M12, 4-pole, without cable	**101208522**
M12, 4-pole, cable length 2 m	**101209937**
M12, 4-pole, cable length 5 m	**101209918**
Connecting cable KA-0965 to connect SLG 425I	
M12, 4-pole to M8, 3-pole, 2 m	**101210312**

Ordering details

Reflector	**R 51 x 61-L**
Reflector	**R D83**
Mounting angle	**BF 50**
Mounting angle universal	**BF UNI 1**

в Беларуси Заказ г.Минск viber и тел.+375447584780 email: minsk17@tut.by

Safety monitoring modules for optoelectronic safety components

Besides the traditional safety relay controls, Schmersal offers CE-type tested safety controls or other safety-oriented bus systems (e.g. AS-i Safety at Work) for different levels of complexity and combination depths.
Which provide the user with many visualization and diagnostic possibilities.

в Беларуси Заказ г.Минск viber и тел.+375447584780 email: minsk17@tut.by

Safety monitoring modules for optoelectronic safety components

SRB 301MA

- Suitable for signal processing of emergency stop command devices, interlocking devices, outputs connected to potentials and magnetic safety switches
- 1 or 2 channel control
- 3 safety contacts, STOP 0
- 1 additional acknowledgement output
- Reset function with trailing edge
- Optionally with short-circuit recognition (through switch)
- 4 LEDs to show operating conditions

Technical data

Standards:	IEC/EN 60204-1; EN 60947-5-1; EN ISO 13849-1; IEC 61508
Start conditions:	Start button (monitored)
Feedback circuit (Y/N):	yes
ON delay with reset button:	typ. 15 ms
Drop-out delay in case of emergency stop:	≤ 15 ms
Drop-out delay on „supply failure“:	typ. 80 ms
Rated operating voltage U_e:	24 VDC –15%/+20%, residual ripple max. 10%; 24 VAC –15%/+10%
Frequency range:	50 / 60 Hz
Fuse rating for the operating voltage:	Internal electronic protection, tripping current > 500 mA, reset after approx. 1 sec
Internal electronic protection (Y/N):	yes
Power consumption:	1.8 W; 4.4 VA
Monitored inputs:	
- Short-circuit recognition:	optional
- Wire breakage detection:	yes
- Earth connection detection:	yes
Number of NC contacts:	2
Number of NO contacts:	0
Max. conduction resistance:	max. 40 Ω
Outputs:	
Stop category:	0
Number of safety contacts:	3 (13-14; 23-24; 33-34)
Number of auxiliary contacts:	1 (41-42)
Max. switching capacity of the safety contacts:	230 VAC, 8 A ohmic (inductive in case of appropriate protective wiring); min. 10 V, 10 mA
Max. switching capacity of the auxiliary contacts:	24 VDC, 2 A
Utilisation category to EN 60947-5-1:	AC-15: 230 V / 6 A DC-13: 24 V / 6 A
Fuse rating of the safety contacts:	8 A slow blow
Fuse rating of the auxiliary contacts:	2 A slow blow
Mechanical life:	10 million operations
Ambient conditions:	
Ambient temperature:	−25 °C … +60 °C
Storage and transport temperature:	−40 °C … +85 °C
Protection class:	Enclosure: IP40, Terminals: IP20, Clearance: IP54
Mounting:	Snaps onto standard DIN rail to EN 60715
Connection type:	Screw terminals
- min. cable section:	0.25 mm²
- max. cable section:	2.5 mm²
Weight:	250 g
Dimensions (Height x Width x Depth):	100 x 22.5 x 121 mm

Approvals

Ordering details

SRB 301MA

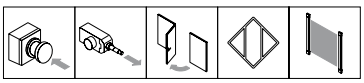

Classification

Safety parameters:

Standards:	EN ISO 13849-1, IEC 61508, EN 60947-5-1
PL:	STOP 0: up to e
Category:	STOP 0: up to 4
PFH value:	STOP 0: ≤ 2.00 x 10^{-8}/h
SIL:	STOP 0: up to 3
Mission time:	20 years

The PFH value of 2.00 x 10^{-8}/h applies to the combinations of contact load (current through enabling contacts) and number of switching cycles (n-op/y) mentioned in the table below. At 365 operating days per year and a 24-hours operation, this results in the below-mentioned switching cycle times (t-cycle) for the relay contacts.
Diverging applications upon request.

Contact load	n-op/y	t-cycle
20 %	525,600	1.0 min
40 %	210,240	2.5 min
60 %	75,087	7.0 min
80 %	30,918	17.0 min
100 %	12,223	43.0 min

в Беларуси Заказ г.Минск viber и тел.+375447584780 email: minsk17@tut.by

Safety monitoring modules for optoelectronic safety components

Note

- Monitors a guard door to PL e and category 4.
- Input level: The example shows a 2-channel control of a guard door monitoring with two position switches, whereof one with positive break, external reset button Ⓡ and feedback circuit Ⓗ2.
- The feedback circuit monitors the position of the contactors Ka and Kb.
- Switch setting:
  The cross-wire short detection function (factory default) is programmed by means of the switch located underneath the front cover of the module:
  Position nQS (top):
  no cross-wire short protection, suitable for 1-channel applications and applications with outputs with potential in the control circuits.
  Position QS (bottom):
  cross-wire short protection, suitable for 2-channel applications without outputs with potential in the control circuits.
- For 1-channel control, connect NC contact to S11/S12 and bridge S12/S22 (QS-switch = nQS)
- Connect potential p-type outputs of safety light grids/curtains to S12/S22. The devices must have the same reference potential. (QS-switch = nQS)
- Inductive loads (e.g. contactors, relays, etc.) are to be suppressed by means of a suitable circuit.

Wiring diagram

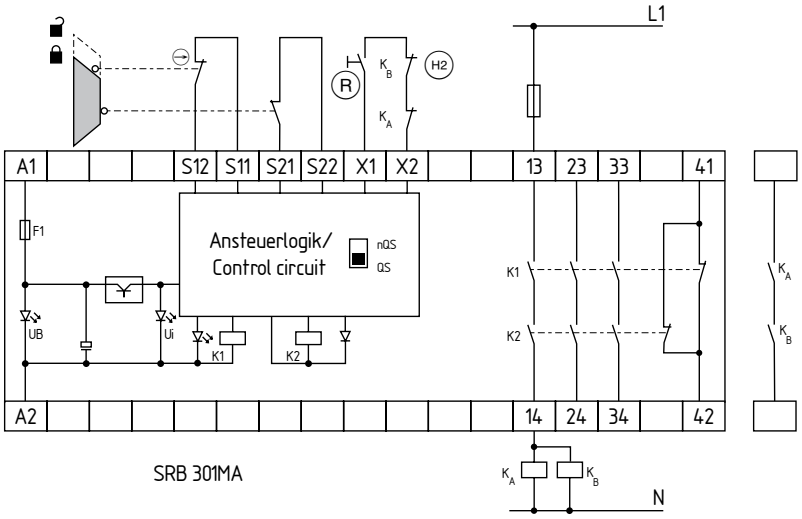

LED

The integrated LEDs indicate the following operating states.

- Position relay K1
- Position relay K2
- Supply voltage U_B
- Internal operating voltage U_i

Note

- The wiring diagram is shown with guard doors closed and in de-energised condition.

в Беларуси Заказ г.Минск viber и тел.+375447584780 email: minsk17@tut.by

Safety monitoring modules for optoelectronic safety components

SRB 301MC

- Suitable for signal processing of emergency stop command devices, interlocking devices, outputs connected to potentials and magnetic safety switches
- 1 or 2 channel control
- 3 safety contacts, STOP 0
- 1 additional acknowledgement output
- Automatic reset function
- Optionally with short-circuit recognition (through switch)
- 4 LEDs to show operating conditions

Technical data

Standards:	IEC/EN 60204-1; EN 60947-5-1; EN ISO 13849-1; IEC 61508
Start conditions:	Automatic or start button
Feedback circuit (Y/N):	yes
ON delay with automatic start:	typ. 100 ms
ON delay with reset button:	typ. 20 ms
Drop-out delay in case of emergency stop:	≤ 20 ms
Drop-out delay on „supply failure“:	typ. 80 ms
Rated operating voltage U_e:	24 VDC –15%/+20%, residual ripple max. 10%; 24 VAC –15%/+10%
Frequency range:	50 / 60 Hz
Fuse rating for the operating voltage:	Internal electronic protection, tripping current > 500 mA, reset after approx. 1 sec
Internal electronic protection (Y/N):	yes
Power consumption:	2.0 W; 4.9 VA
Monitored inputs:	
- Short-circuit recognition:	optional
- Wire breakage detection:	yes
- Earth connection detection:	yes
Number of NC contacts:	2
Number of NO contacts:	0
Max. conduction resistance:	max. 40 Ω
Outputs:	
Stop category:	0
Number of safety contacts:	3 (13-14; 23-24; 33-34)
Number of auxiliary contacts:	1 (41-42)
Max. switching capacity of the safety contacts:	230 VAC, 8 A ohmic (inductive in case of appropriate protective wiring)
Max. switching capacity of the auxiliary contacts:	24 VDC, 2 A
Utilisation category to EN 60947-5-1:	AC-15: 230 V / 6 A DC-13: 24 V / 6 A
Fuse rating of the safety contacts:	8 A slow blow
Fuse rating of the auxiliary contacts:	2 A slow blow
Mechanical life:	10 million operations
Ambient conditions:	
Ambient temperature:	−25 °C … +60 °C
Storage and transport temperature:	−40 °C … +85 °C
Protection class:	Enclosure: IP40, Terminals: IP20, Clearance: IP54
Mounting:	Snaps onto standard DIN rail to EN 60715
Connection type:	Screw terminals
- min. cable section:	0.25 mm²
- max. cable section:	2.5 mm²
Weight:	250 g
Dimensions (Height x Width x Depth):	100 x 22.5 x 121 mm

Approvals

Ordering details

SRB 301MC-24V

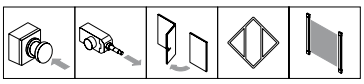

Classification

Safety parameters:

Standards:	EN ISO 13849-1, IEC 61508, EN 60947-5-1
PL:	STOP 0: up to e
Category:	STOP 0: up to 4
PFH value:	STOP 0: ≤ 2.00 x 10^{-8}/h
SIL:	STOP 0: up to 3
Mission time:	20 years

The PFH value of 2.00 x 10^{-8}/h applies to the combinations of contact load (current through enabling contacts) and number of switching cycles (n-op/y) mentioned in the table below. At 365 operating days per year and a 24-hours operation, this results in the below-mentioned switching cycle times (t-cycle) for the relay contacts.
Diverging applications upon request.

Contact load	n-op/y	t-cycle
20 %	525,600	1.0 min
40 %	210,240	2.5 min
60 %	75,087	7.0 min
80 %	30,918	17.0 min
100 %	12,223	43.0 min

в Беларуси Заказ г.Минск viber и тел.+375447584780 email: minsk17@tut.by

Safety monitoring modules for optoelectronic safety components

Note

- Monitors a guard door to PL e and category 4.
- Input level: The example shows a 2-channel control of a guard door monitoring with two position switches, whereof one with positive break, external reset button Ⓡ and feedback circuit Ⓗ2.
- The feedback circuit monitors the position of the contactors Ka and Kb.
- Switch setting:
  The cross-wire short detection function (factory default) is programmed by means of the switch located underneath the front cover of the module:
  Position nQS (top):
  no cross-wire short protection, suitable for 1-channel applications and applications with outputs with potential in the control circuits.
  Position QS (bottom):
  cross-wire short protection, suitable for 2-channel applications without outputs with potential in the control circuits.
- For 1-channel control, connect NC contact to S11/S12 and bridge S12/S22 (QS-switch = nQS)
- Connect potential p-type outputs of safety light grids/curtains to S12/S22. The devices must have the same reference potential. (QS-switch = nQS)
- Automatic start:
  The automatic start is programmed by connecting the feedback circuit to the terminals X1/X2. If the feedback circuit is not required, establish a bridge.
- Inductive loads (e.g. contactors, relays, etc.) are to be suppressed by means of a suitable circuit.

Wiring diagram

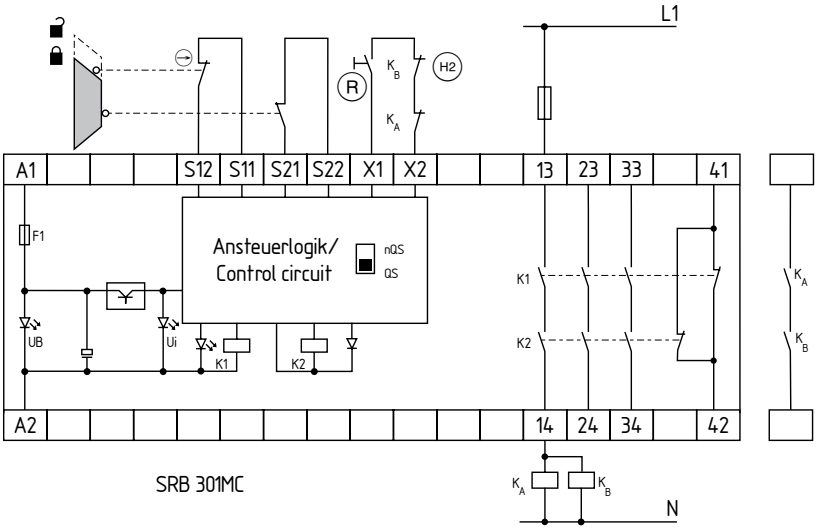

LED

The integrated LEDs indicate the following operating states.

- Position relay K1
- Position relay K2
- Supply voltage U_B
- Internal operating voltage U_i

Note

- The wiring diagram is shown with guard doors closed and in de-energised condition.

в Беларуси Заказ г.Минск viber и тел.+375447584780 email: minsk17@tut.by

Other publications

Companies

- Image brochure
- Product overview

Our updated image brochure includes "facts and figures" regarding the Schmersal Group. This brochure will introduce our business activities and our international production sites to you. And you will get a deeper insight in a medium-sized owner-managed company, which is successful for more than six decades already - according to the motto "Safe living, safe working".

The product overview gives you a concised overview how our range of approx. 18,000 safety switchgear is categorised. You will find the comprehensive description of this overview in our catalogues and product brochures (see below).

Products

Catalogues

- Safety technology
- Automation technology
- Explosion protection
- Elevator technology

Thematic brochures

- Electronic safety sensors and solenoid interlocks
- Safety Control PROTECT PSC
- AS-Interface Safety at Work
- Ex switchgear
- Control devices and indicator lights
- Safety relay modules PROTECT SRB

In the comprehensive catalogues, you will find our entire range of default switchgear, which the Schmersal Group offers for the individual businesses and fields of competence. All data can also be quickly found by means of intelligent search functions in our online catalogue at www.schmersal.net, where they can be download as well.

Our thematic brochures give you an overview of the principles, application possibilities and product range of the individual series and technologies.

Branches

- Food
- Woodworking
- Packaging
- Machine tools
- Elevators and Escalators

For a number of core industries of the machinery and plant construction, we have developed dedicated products and solutions, which do not only optimise the safety level, but the productivity of the machines as well.

We offer, for instance, different series of safety switchgear, which have been developped in accordance with the "Hygienic Design" principles; due to their protection class IP 69K, they can be cleaned using high-pressure jet steamers, a commonly used tool in many food-processing companies.

Services

- MRL News
- tec.nicum
- Safety Consulting

The "Safety Consulting" brochure gives you an overview of our worldwide services. Get informed about the service offer of our Safety Consultants, who can help you for instance with the CE Conformity Declaration process!

In our tec.nicum training centre, we regularly organise interesting seminars, lectures and workshops regarding machinery safety. Request our up-to-date programme!

You can subscribe for free to MRL News, which is regularly published, to keep in touch with the latest substantiated "news" regarding the development of the standards.

в Беларуси Заказ г.Минск viber и тел.+375447584780 email: minsk17@tut.by

Enabling switches

Catalogue ZB/10 – Type series ZSD

SCHMERSAL

Elan

в Беларуси Заказ г.Минск viber и тел.+375447584780 email: minsk17@tut.by

Catalogue ZB/10
Enabling switches

Contents

Some background information	Page 2
Versions available	4
Enabling switch (grip switch), 3 positions, ZSD5/ZSD6 type series	6
Enabling switch, 3 positions, ZSD1LC…, ZSD1.1LC type series	10
Enabling switch, 3 positions, ZSD2LC…, ZSD2.1LC type series	12
Enabling switch HE3B-M2PY	14
Enabling switch (grip switch), 2 positions, ZSD4... type series	16
Technical data/electrical specifications	18
Circuit suggestions ZSD1LC…, ZSD1.1LC…, ZSD2LC…, ZSD2.1LC…, ZSD4..., ZSD5/6	20

Subject to technical modifications and error. The data specified in this catalogue are carefully checked typical standard values.

Or as the ancient Greeks already knew:

The Gods do not reveal everything to mortals from the very beginning.
But during the course of time our search will show us what is better.

Xenophanes
(Greek philosopher,
580/577 B.C.)

Descriptions of technical correlations, details on external control units, installation and operating instructions or similar have been provided to the best of our knowledge. However, this does not mean that warranted characteristics or other properties under liability law may be assumed which extend beyond the "General Terms of Delivery of Products and Services of the Electrical Industry". We trust you will understand that the user must therefore check our information and recommendations before using our equipment.

в Беларуси Заказ г.Минск viber и тел.+375447584780 email: minsk17@tut.by

Enabling switches
Some background information

Application
If a machine is running in a special operation mode an entire or partial bypass of the protective devices might be required. In such conditions manually operated enabling switches – possibly together with other safety measures – serve to protect the operator from hazardous situations.

Although safeguards are designed to provide appropriate protection in all operating modes, exceptions are admissible if it is otherwise not possible to operate a machine practically. These exceptions will typically include the setting up of a machine, service work or observing operating processes, so-called process observation.

In these cases additional actions must be taken to guarantee personal protection of individuals even in special operating modes. Enabling switches are frequently used in such situations.

They serve to permit commands (for example for hazardous movements) from other control stations. Start signals for hazardous movements must not be triggered by an enabling switch alone.

If the operator releases the pushbutton, or in the case of the 3-position version, the operator overpresses the trigger point of the pushbutton then the “Go” signal is interrupted by a forced open NC contact.

Product range
Although the field of application for enabling switches is relatively clear, there is no universal solution because specific functional and ergonomic requirements in particular may differ from case to case or may be weighted differently.

Elan therefore offers various solutions when an “enabling mode” is required.

Enabling switches are available in different versions:
- as grip switch
- built-in in a mobile control housing, with optional additional functions
- as stand-alone version.

Three-position devices are the most common.

в Беларуси Заказ г.Минск viber и тел.+375447584780 email: minsk17@tut.by

2 or 3-position device versions
Deciding which solution of the two, i.e. 2 or 3 position, is the most appropriate will depend on the individual application.

From the safety point of view, a 3-position enabling switch will always be the better solution. However, there are ergonomic reservations when working with these devices for a longer period of time.

The advantage of 3-position enabling switches is that the operator has two options (releasing or pressing down) to switch off the machine reliably in the case of an emergency situation caused by a sudden hazardous movement. It should be remarked that empirical studies have shown that in panic situations a person will tend to freeze, i.e. will be more likely to press the button down rather than to release it.

According to EN 775, the installation of enabling switches for roboter movements is only allowed in 3-stage versions!

Regulations and standards
The subject of enabling switches is addressed in the following standards and regulations.

- **DIN EN ISO 12100-1:** Safety of machinery – Basic concepts, general design principles – Part 1: Basic terminology and methods
- **DIN EN ISO 12100-2:** Safety of machinery– Basic concepts, general design principles – Part 2: Technical principles and specifications
- **EN 60204-1:** Safety of machinery – Electrical equipment of machines – Part 1 General requirements.
- **EN 775:** Industrial robots, safety
- **prEN 11161:** Industrial automation systems – Safety of integrated production systems – Basic requirements.
- **GS-ET-22/11.05** – BG Principles for the testing of moving electromechanical enabling switches.

A distinction is made between 2- and 3-position enabling switches

	2-position enabling switch	3-position enabling switch
Position 1	OFF function (actuator not depressed)*	OFF function (actuator not depressed)*
Position 2	Enabling function (actuator depressed)	Enabling function (actuator depressed)
Position 3	– not existing –	OFF function (actuator pressed down exceeding the middle position)**
Additionally:	EMERGENCY-STOP push-button in direct vicinity	– not applicable –

* The reset of the actuator may be spring powered (cf. DIN EN ISO 12100-1)

** When resetting the actuator from position 3 through position 2 to position 1 this must not generate a restart pulse..

в Беларуси Заказ г.Минск viber и тел.+375447584780 email: minsk17@tut.by

Enabling switches
Scope

Enabling switch, 3 positions, performed as grip switch

Technical data/further information:
refer to page 6

- Type ZSD5
- 3 positions (OFF – ON – OFF)
- 2 contacts (NO)
- Positive opening (position 2 ↔ position 3)
- Contacts do not close during reset (position 3 ↔ position 1)
- Redundant contact configuration permits signal processing with commercially available safety relay modules. Contact configuration permits signal processing acc. PL e (position 2 ↔ 3) or PL c (position 2 ↔ 1) of EN ISO 13849.
- 1 auxiliary contact (NC), position 2 ↔ 3
- Class of protection IP 65
- Especially suitable for robot application in compliance with ANSI Robotics Standard
- BG prototype testing
- Option: mounting bracket
- Upon request: with cable set

Enabling switch, 3 positions built into a mobile control device PILOT 10

Technical data/further information:
refer to page 10

- Type ZSD1LC..., ZSD1.1LC
- 3 positions (OFF – ON – OFF)
- 2 contacts (NC/NO combination)
- Positive opening (position 2 ↔ position 3)
- Redundant contact configuration permits signal processing with commercially available safety relay modules. Contact configuration permits signal processing acc. PL e (position 2 ↔ 3) or PL c (position 2 ↔ 1) of EN ISO 13849.
- Contact configuration permits signal processing acc. PL c (position 2 ↔ 1) or PL e (position 2 ↔ 3) of EN ISO 13849-1
- Class of protection IP 65
- With 5 m cable set
- Upon request: electrically monitored “parking position” with safety switches TZG, actuator mounted in PILOT housing (for illustrative example refer to page 2).

Enabling switch, 3 positions performed as grip switch additionally with 1 pushbutton

Technical data/further information:
refer to page 6

- Type ZSD6
- Design features: see above
- With additional pushbutton (1 NO contact) in device head
- Upon request: with cable set

Enabling switch, 3 positions, additionally 2 pushbuttons, built into a mobile control device PILOT 20

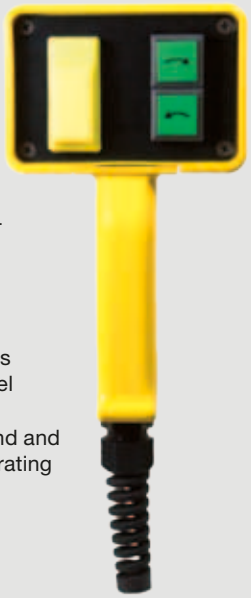

Technical data/further information: refer to page 12

- Type ZSD2LC..., ZSD2.1LC…
- Design features: see above
- With 2 additional pushbuttons (1 NO each) in operating panel
- Upon request: with cable or equipped with other command and indicating devices in the operating panel

в Беларуси Заказ г.Минск viber и тел.+375447584780 email: minsk17@tut.by

Enabling switch, 2 positions, additionally with 1 Emergency STOP pushbutton plus 1 pushbutton, built into a mobile control device PILOT 20

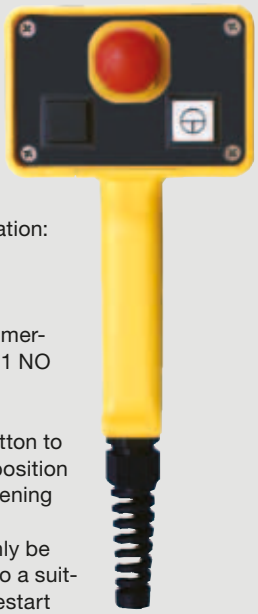

Technical data/further information:
refer to page 16

- Type ZSD4...
- Enabling function (with commercially available pushbutton, 1 NO contact)
- 2 positions (OFF – ON)
- 1 emergency STOP pushbutton to EN 418 (as a substitute for position 3 ≙ STOP with positively opening effect)
- ATTENTION: Device may only be operated when connected to a suitable follow-up circuit with restart prevention.
- With 1 additional pushbutton (1 NO contact) in operating panel
- Upon request: with cable set or equipped with other command and signalling devices in the operating panel
- Upon request: Electrically monitored “parking position” with safety switches TZG, actuator mounted in PILOT housing (for illustrative example refer to page 2).

Enabling switch, 3 positions for direct front panel installation

Technical data/further information:
refer to page 14

- Type HE3B-M2PY
- For bore holes with 16 mm diameter
- 3 positions (OFF – ON – OFF)
- Positive opening (position 2 ↔ position 3)
- Contacts don’t close during reset (position 3 -> position 1)
- Redundant contact configuration permits signal processing with commercially available safety relay modules acc. to control category 3/4 of EN 954-1.
- Contact configuration permits signal processing acc. control category 2 (position 2 ↔ 1) or 4 (position 2 ↔ 3) of EN ISO 13849-1
- Class of protection IP 65

Safe signal processing with commercially available safety relay modules (for ZSD1LC..., ZSD1.1LC, ZSD2LC..., ZSD2.1LC, ZSD4..., ZSD5..., ZSD6...)

Technical data/further information: refer to Schmersal catalogue PROTECT-SRBs

For example with PROTECT-SRB modules:

- Safe signal processing in control category 4 according to EN ISO 13849-1 for all versions
- With cross short monitoring
- Plug-in terminals
- Comprehensive visualisation
- Electronic control
- Suitable for all types of protective devices
- BG prototype testing

в Беларуси Заказ г.Минск viber и тел.+375447584780 email: minsk17@tut.by

Enabling switch (grip switch) ZSD5/ZSD6

Enabling switch, 3 positions, performed as grip switch

- Type ZSD5
- 3 positions (OFF – ON – OFF)
- 2 contacts (NO)
- Positive opening (position 2 -> position 3)
- Contacts do not close during reset (position 3 -> position 1)
- Redundant contact configuration permits signal processing with commercially available safety relay modules in control category 3/4 according to EN 954-1
- 1 auxiliary contact (NC), position 2 -> 3
- Class of protection IP 65
- Especially suitable for robot application in compliance with ANSI Robotics Standard
- BG prototype testing
- Option: mounting bracket
- Upon request: with cable set

Enabling switch, 3 positions performed as grip switch, additionally with 1 pushbutton

- Type ZSD6
- Design features: see left
- With additional pushbutton

(1 NO contact) in device head

- Upon request: optionally with cable set, equipped with other command and indicating devices in the device head

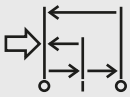

Dimensions

ZSD5

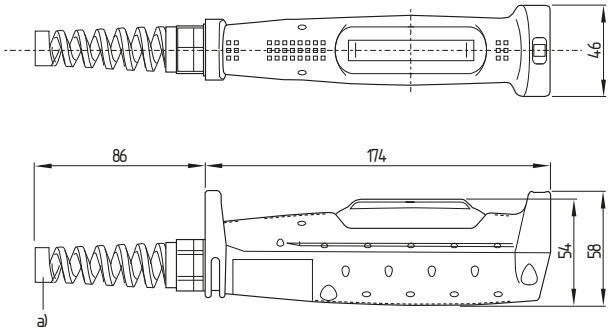

ZSD6

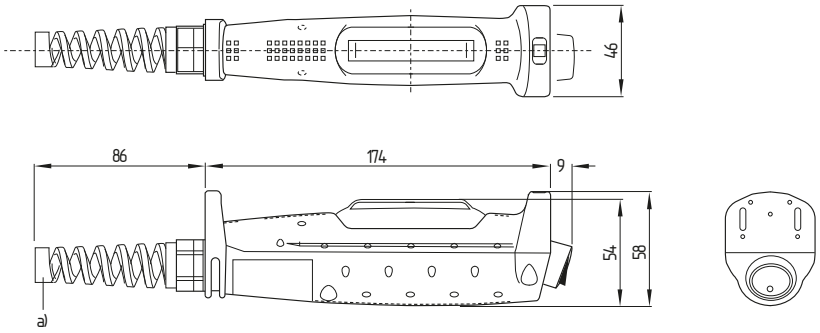

a) Connection: SKINTOP BS-M20 × 1.5

в Беларуси Заказ г.Минск viber и тел.+375447584780 email: minsk17@tut.by

Accessories

Mounting bracket, metallic

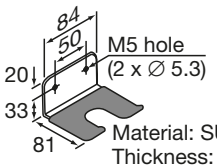

Product range

Description	Type	Cat. no.	Part no.
Enabling switch, 3 positions, as grip switch, 2 contacts (NO), 1 auxiliary contact (NC)	ZSD5	0630000	1199467
Enabling switch, 3 positions, as grip switch, 2 contacts (NO), 1 auxiliary contact (NC) with additional pushbutton (NO) in device head	ZSD6	0630010	1199480
Mounting bracket, metallic	ZSD-H	0630200	1193725

Electrical specifications of the basic device ZSD5/ZSD6

Rated voltage	250 VAC/VDC		
Rated operating current (thermal)	3.0 A		
Rated data	30 V	125 V	250 V
Contacts			
– ohmic load (AC-12)	–	3.0 A	1.5 A
– inductive load (AC-15)	–	1.5 A	0.75 A
– ohmic load (DC-12)	2.0 A	0.4 A	0.2 A
– inductive load (DC-13)	1.0 A	0.22 A	0.1 A
Contact configuration	2 NO		
Auxiliary contact			
– ohmic load (AC-12)	–	2.0 A	1.0 A
– inductive load (AC-15)	–	1.0 A	0.5 A
– ohmic load (DC-12)	2.0 A	0.4 A	0.2 A
– inductive load (DC-13)	1.0 A	0.22 A	0.1 A
Contact configuration	1 NC		

Electrical contact data for additional pushbutton at ZSD6

Ohmic load AC-12	1.5 A	0.5 A	–
– inductive load AC-15	1.0 A	0.3 A	–
Ohmic load DC-12	1.0 A	0.2 A	–
Inductive load DC-13	0.7 A	0.1 A	–

NB: AC inductive load: cos φ = 0.6–0.7, DC ohmic load: L/R = 40 ms

Min. switchable load (reference value): 5 V, 1 mA AC/DC (range dependent on operating conditions and load).

в Беларуси Заказ г.Минск viber и тел.+375447584780 email: minsk17@tut.by

Contact travel chart	1	2	3	
Contact 1–2				⊖
Contact 3–4				⊖
Auxiliary contact 5–6				⊖

Open: ▭, closed: ■, ⊖ = Positive opening

Assembly instructions

Wire length	Connection 1–4	Connection 5–8
L1, L2	L1 = 40 mm	L2 = 27 mm
L3	L3 = 6 mm	
N.B.: Wire cross-section 0.14 ... 1.5 mm² (1 wire per connection)	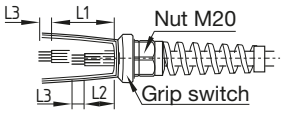	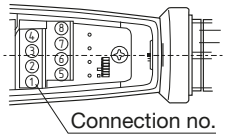

Device structure

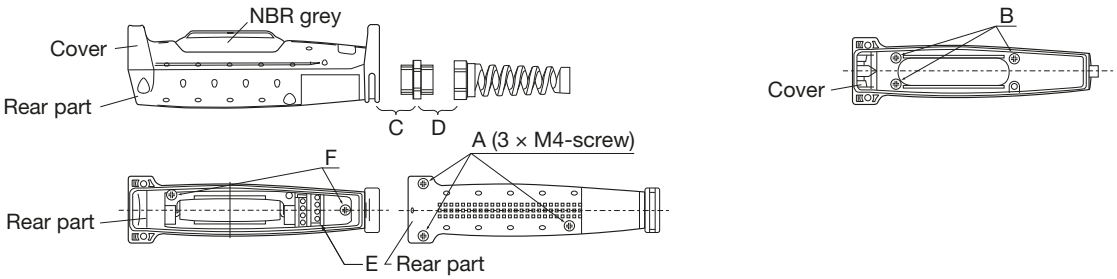

в Беларуси Заказ г.Минск viber и тел.+375447584780 email: minsk17@tut.by

Component	Description	Torque
A	Housing screws	1.2 ± 0.1 Nm
B	Rubber cap screws[1)]	–
C	Gland	4.0 ± 0.3 Nm
D	Strain relief device	4.0 ± 0.3 Nm
E	Screw terminal	0.5 ... 0.6 ± 0.2 Nm
F	Board screws[1)]	–

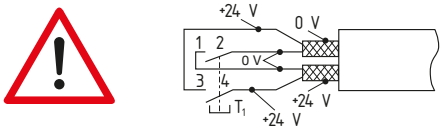

The monitoring device must have the facility to monitor cross-shorts. In addition, the enabling channels are to be laid and wired within the connection cable as shown in the left. It's to use a 4-stranded, double-screened shroud line.

1) From factory

General data ZSD5/ZSD6	
Regulations and approvals	ISO 12100, ISO 11161, ISO 10216, IEC EN 60947-5-1, IEC 60204-1, EN ISO 12100, EN 775, EN 60204-1, prEN ISO 11181, IEC EN 60947-5-1, UL 508, JIS C8201-5-1, ANSI/RIA R15.06
Ambient temperature	–10 ... +60 °C (no ice-up)
Storage temperature	–40 ... +80 °C (no ice-up)
Relative air humidity	45 ... 85% (no condensation)
Pollution degree	3
Contact resistance	100 mΩ (in new state)
Isolation resistance	100 mΩ min. (Megger DC 500 V)
Electric strength	2.5 kV
Switching frequency	1,200 switching operations/hour
Mechanical serviceable life of the switching insert contact	Position 1–2–1: 10^6 switching operations min. Position 1–2–3–1: 10^5 switching operations min.
Electrical serviceable life	10^5 switching operations (under full load)
Positive opening path	7.4 mm
Minimum force for positive opening	90 N
Shock resistance	Operation: 100 m/s² Destruction: 1,000 m/s²
Vibration resistance	Operation: 5 ... 55 Hz, amplitude 0.5 mm min. Destruction: 16.7 Hz, amplitude 1.5 mm min.
Connection system	Screw terminals
Terminal cross-section	0.14 ... 1.5 mm²
Cable diameter	7 ... 13 mm
Cable gland	M20
Tensile strength of the connection	20 N min.
Recommended screw torque	0.5 ... 0.6 N/m
Protection class	IP 65
Short-circuit strength	50 A (250 V)
Recommended short-circuit fuse	250 V/10 A fast blowing (IEC 60127-1)
Weight	ZSD5: approx. 210 g ZSD6: approx. 240 g

в Беларуси Заказ г.Минск viber и тел.+375447584780 email: minsk17@tut.by

Enabling switch, 3 positions, type series ZSD1LC..., ZSD1.1LC
built into a mobile control device PILOT 10

Enabling switch, 3 positions
built into a mobile control device PILOT 10

- Type ZSD1.1LC...
- With enabling switch HE3B-M2PY
- 3 positions (OFF – ON – OFF)
- 2 contacts (NC/NO combination)
- Positive opening (position 2 ↔ position 3)
- Contacts don't close at reset (position 3 ↔ position 1)
- Redundant contact configuration permits signal processing acc. control category 3/4 of EN ISO 13849-1
- Contact configuration permits signal processing acc. control category 2 (position 2 ↔ 1) or 4 (positions 2 ↔ 3) of EN ISO 13849-1
- Class of protection IP 65
- With 5 m cable set

Dimensions

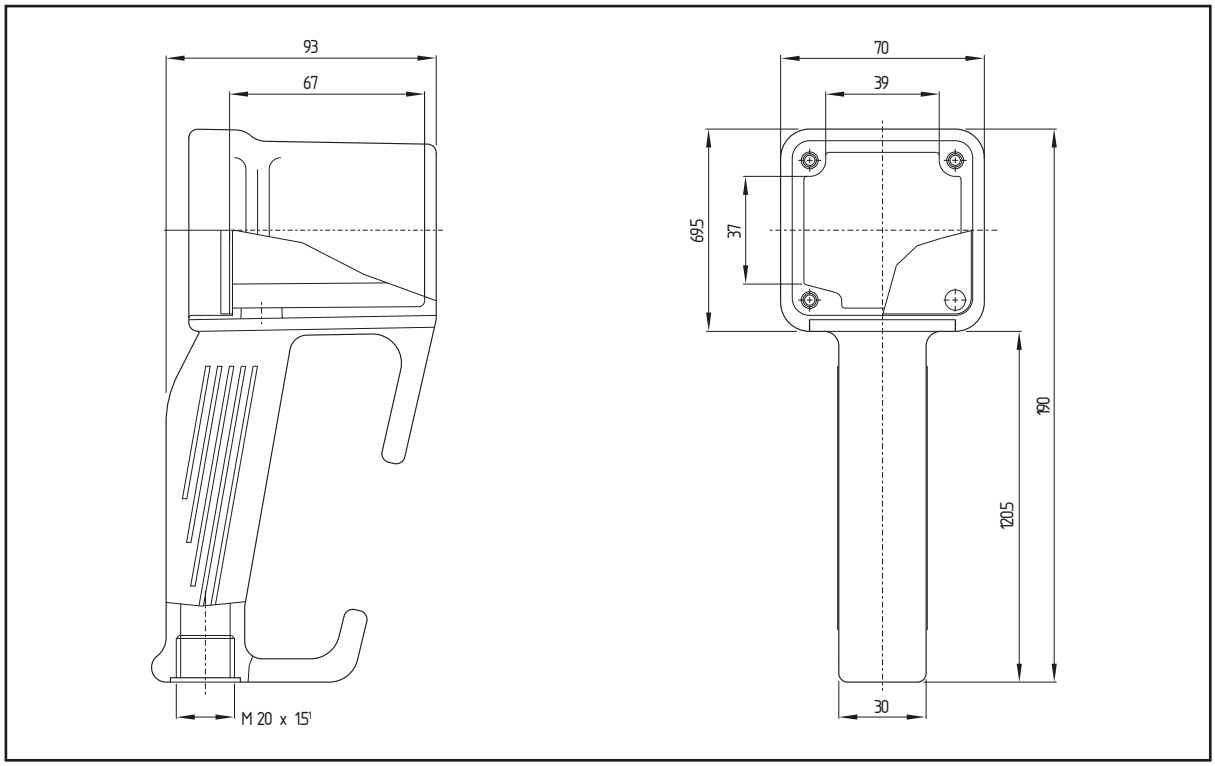

1) Cable gland belongs to scope of delivery

в Беларуси Заказ г.Минск viber и тел.+375447584780 email: minsk17@tut.by

Accessories

- Electrically monitored “parking position” with safety swtich TZG...
- Optionally 1 NC/1 NO or 2 NC
- Interlocking device with separate actuator according to EN 1088
- With protective cover (metal, not illustrated)
- Actuator integrated in PILOT control device
- Other technical data/electrical specifications (abbreviated): refer to page 18

Dimensions

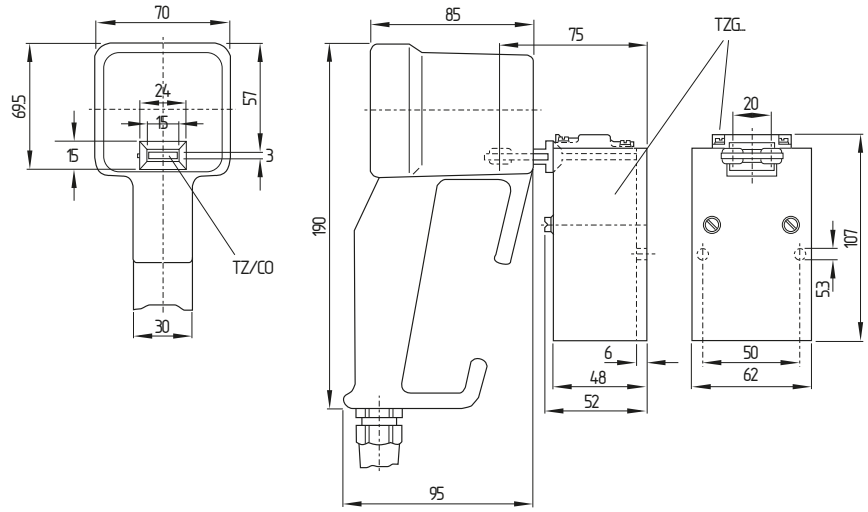

Product range

Description		Type	Cat. no.	Part no.
Enabling switch, 3 positions, built into a mobile control device PILOT 10, with 5 m cable set		ZSD1.1LC	0640021	1212189
Ditto, with 5 m cable set, with separate actuator TZ/CO (mounted)	+ TZG 103/ZSD	ZSD1LC/TZG103	0640011	1212187
	+ TZG 110/ZSD	ZSD1LC/TZG110	0640012	1212188
Safety switch, 1 NC contact, 1 NO contact		TZG 103/ZSD	1347004	1019264
Ditto, 2 NC contacts, with 5 m cable set		TZG 110/ZSD	1347005	1025324

Technical data/electrical specifications of the basic device ZSD1LC..., ZSD1.1LC (HE3B-M2PY)

Refer to page 18

в Беларуси Заказ г.Минск viber и тел.+375447584780 email: minsk17@tut.by

Enabling switch, 3 positions, type series ZSD2LC..., ZSD2.1LC
built into a mobile control device PILOT 20

**Enabling switch, 3 positions,
built into a mobile control device PILOT 20**

- Type ZSD2LC...
- With enabling switch HE3B-M2PY
- 3 positions (OFF – ON – OFF)
- 2 contacts (NO/NC combination)
- Positive opening (position 2 ↔ position 3)
- Contacts don't close at reset (position 3 ↔ position 1).
- Redundant contact configuration permits signal processing with commercially available safety relay modules acc. to control category 3/4 of EN ISO 13849-1
- Contact configuration permits signal processing acc. control category 2 (positions 2 ↔ 1) or 4 (positions 2 ↔ 3) of EN ISO 13849-1
- Class of protection IP 65
- Without cable
- With 2 additional pushbuttons (1 NO each) in operating panel
- Upon request: Either with connection cable or other command devices

Dimensions

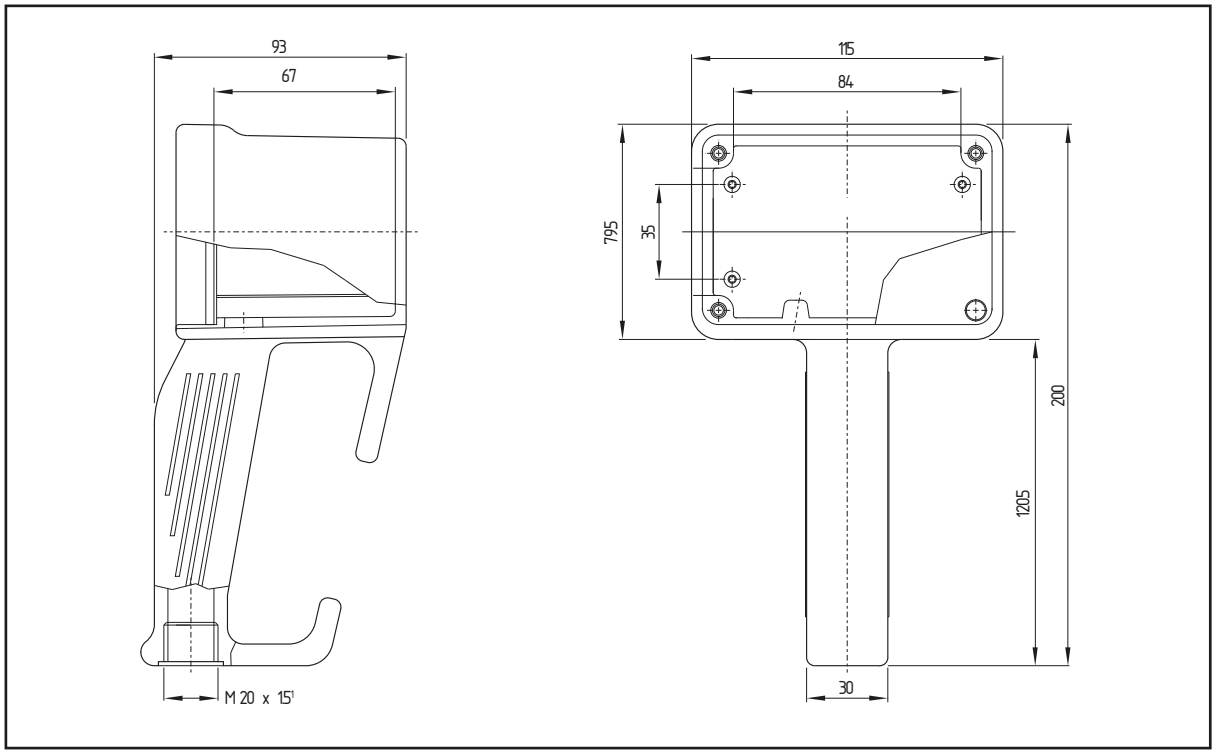

1) Cable gland belongs to scope of delivery

в Беларуси Заказ г.Минск viber и тел.+375447584780 email: minsk17@tut.by

Accessories

- Electrically monitored “parking position” with safety switch TZG...
- Optionally 1 NC/1 NO or 2 NC contacts
- Interlocking device with separate actuator according to EN 1088
- With protective cover (metal, not illustrated)
- Actuator built into PILOT control device
- Other technical data/electrical specifications (abbreviated): refer to page 18
- Figure (example): refer to page 11

Dimensions

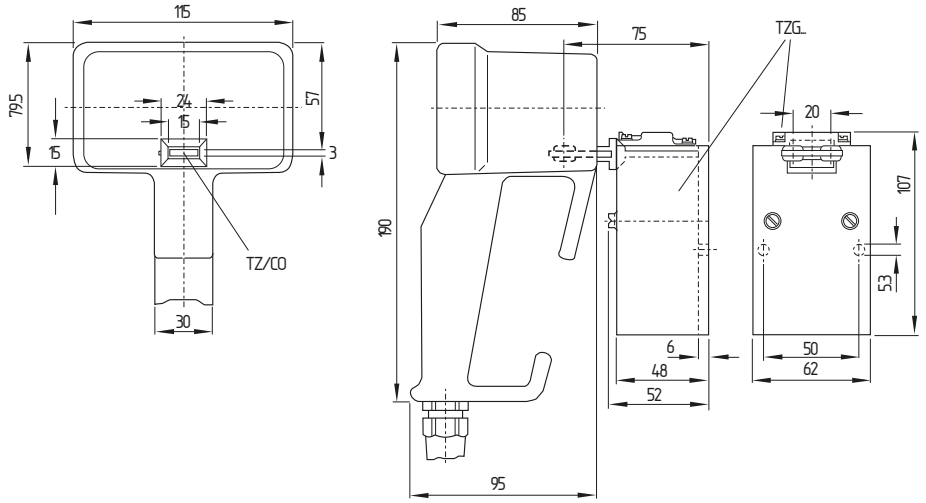

Product range

Description		Type	Cat. no.	Part no.
Enabling switch, 3 positions, built into a mobile control device PILOT 20, with 2 additional pushbuttons (1 NC each) – without connection cable (without TZ/CO / without TZG ...)		ZSD2.1LC	064 0051	121 2193
Ditto, without connection cable, with separate actuator TZ/CO (mounted)	+ TZG 103/ZSD	ZSD2LC/TZG 103	064 0041	121 2190
	+ ZTG 110/ZSD	ZSD2LC/TZG 110	064 0042	121 2192
Safety switch, 1 NC contact, 1 NO contact		TZG 103/ZSD	134 7004	101 9264
Ditto, 2 NC contacts, without connection cable		TZG 110/ZSD	134 7005	102 5324

Technical data/electrical specifications of the basic device ZSD2LC... (HE3B-M2PY)

Refer to page 18

в Беларуси Заказ г.Минск viber и тел.+375447584780 email: minsk17@tut.by

Enabling switch HE3B-M2PY
for direct front panel installation

Enabling switch, 3 positions
for direct front panel installation

- Type HE3B-M2PY
- For bore holes with 16 mm diameter
- 3 positions (OFF – ON – OFF)
- 2 contacts (NO/NC combination)
- Positive opening (position 2 ↔ position 3)
- Contacts don't close at reset (position 3 ↔ position 1)
- Redundant contact configuration permits signal processing with commercially available safety relay modules acc. control category 3/4 of EN ISO 13849-1
- Contact configuration permits signal processing acc. control category 2 (positions 2 ↔ 1) or 4 (positions 2 ↔ 3) of EN ISO 13849-1
- Class of protection IP 65 (with rubber cap)

Dimensions

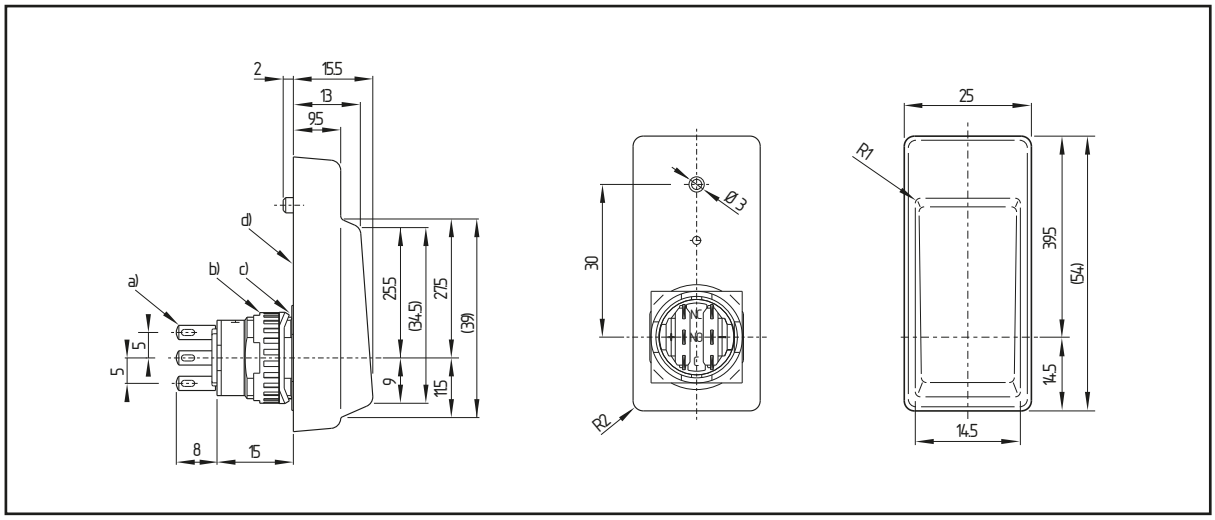

a) Solder terminal width 2.8 × 0.5 t; b) Fastening nut; c) Anti-rotation ring; d) Rubber cover

в Беларуси Заказ г.Минск viber и тел.+375447584780 email: minsk17@tut.by

Product range

Description	Type	Cat. no.	Part no.
Enabling switch, 3 positions, version for direct front panel installation	HE3B-M2PY	064 0000	121 2186

Technical data/electrical specifications of the basic device HE3B-M2PY

Refer to page 18

Operating characteristics

Position		1		2		3	
Actuating path	0.0		0.8	1.8	1.7		1.9
Actuating force (N)	0.0		3.0		20		
Working contact (NO1-C1)							
Working contact (NO2-C2)							

Open: ☐; closed: ▩

For the operating characteristics of the HE3B-M2PY the shown pressure point is valid:

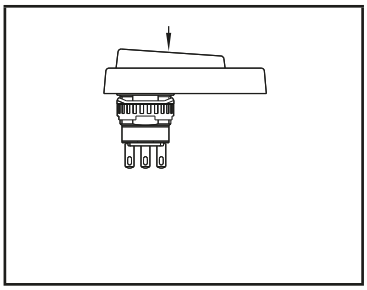

Circuit diagram
NO1-C1, NO2-C2: connection of the working contacts

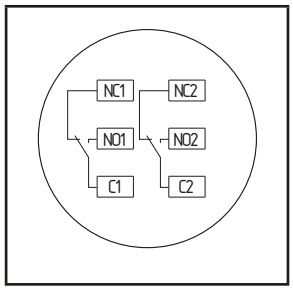

Mounting instructions
Recommended lock nut torque: 0.68 … 0.88 Nm. Remove the rubber cover projection if you do not want a positioning hole (to retain the switches waterproof performance, do not penetrate the rubber cover!).

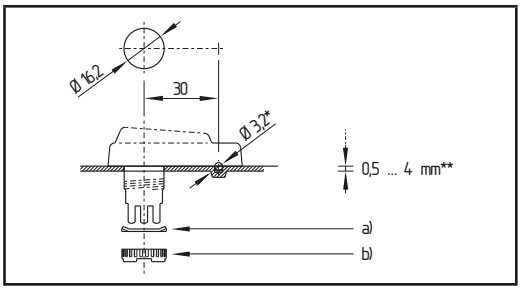

* Positioning hole; ** Mounting panel thickness; a) Anti-rotation ring; b) Locking ring

в Беларуси Заказ г.Минск viber и тел.+375447584780 email: minsk17@tut.by

Enabling switch (grip switch) ZSD4...
built-in in a mobile control device PILOT 20

Enabling switch, 2 positions, additionally with 1 emergency STOP pushbutton plus 1 pushbutton, built-in in a mobile control device PILOT 20

- Type ZSD4...
- Enabling function (with commercially available push-button, 1 NO contact)
- 2 positions (OFF – ON)
- 1 emergency STOP pushbutton acc. to EN 13850 (as a substitute for position 3 ≙ STOP with positively opening effect)
- ATTENTION: Device may only be operated when connected to a suitable follow-up circuit with restart prevention, circuit suggestions refer to page 20.
- With 1 additional pushbutton (1 NO contact) in operating panel
- Upon request: optionally with cable set, equipped with other command and signalling devices in the operating panel.

Dimensions

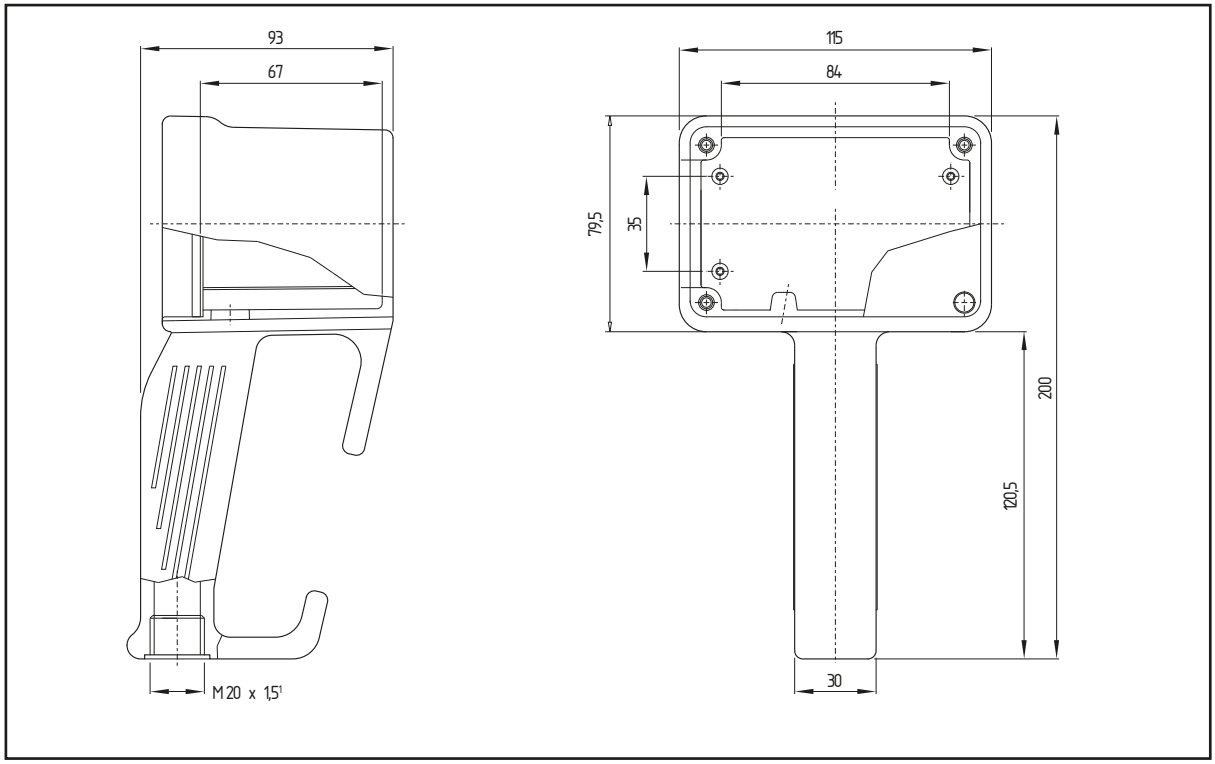

1) Cable gland belongs to scope of delivery

в Беларуси Заказ г.Минск viber и тел.+375447584780 email: minsk17@tut.by

Accessories

- Electrically monitored “parking position” with safety switch TZG...
- Optionally 1 NC/1 NO contacts or 2 NC contacts
- Interlocking device with separate actuator according to EN 1088
- With protective cover (metal, not illustrated)
- Actuator integrated in PILOT control device
- Other technical data/electrical specifications (abbreviated): refer to page 19
- Figure (example): refer to page 11

Dimensions

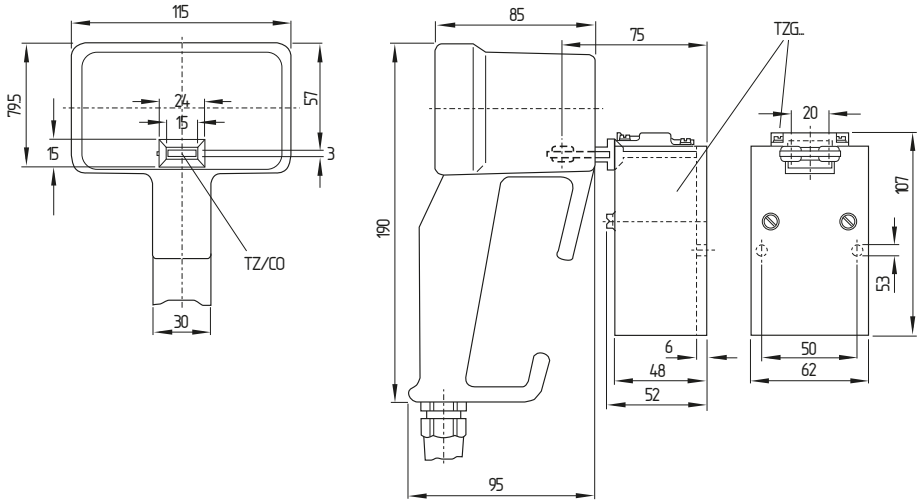

Product range

Description	Type	Cat. no.	Part no.
Enabling switch, 2 positions, additionally with 1 emergency STOP pushbutton, 1 additional pushbutton, built into a mobile control device PILOT 20 – without connection cable (without TZ/CO / without TZG...)	ZSD4.1	064 0092	117 9350
Ditto without connection cable, with separate actuator TZ/CO (mounted) + TZG 103/ZSD	ZSD4/TZG 103	064 0094	117 9367
Ditto without connection cable, with separate actuator TZ/CO (mounted) + TZG 110/ZSD	ZSD4/TZG 110	064 0093	121 3825
Safety switch, 1 NC contact, 1 NO contact	TZG 103/ZSD	134 7004	101 9264
Ditto, 2 NC contacts	TZG 110/ZSD	134 7005	102 5324

Technical data/electrical specifications of the basic device ZSD4...

Refer to page 19

в Беларуси Заказ г.Минск viber и тел.+375447584780 email: minsk17@tut.by

Technical data/electrical specification
Basic device ZSD1..., ZSD2..., ZSD4... und HE3B-M2PY

Mobile control device “PILOT”	
Material	Housing body: polyamide – yellow similar to RAL 1021 Front panel: aluminium
Cable entries	Polyamide cable gland M20 with bend and strain relief, supplied loosely
Protection class	IP 65 to EN 60529
Impact resistance	All housings 7 Nm to EN 50014
Weight	Pilot 10: approx. 350 g (depending on version) Pilot 20: approx. 400 g (depending on version)

Enabling switch HE3B-M2PY		
Regulations and approvals	ISO 12100, ISO 11161, ISO 10218, IEC 60204-1, IEC EN 60947-5-1, EN 292, EN 775, prEN 11161, UL 508, JIS C8201-5-1, ANSI/RIA R15.06	
Ambient operating temperature	Silicone: –25 … +60 °C (no freeze) PVC: –10 … +60 °C (no freeze)	
Storage temperature	–40 … +80 °C (no freeze)	
Relative humidity	45 … 85 % (no condensation)	
Pollution degree	3	
Contact resistance	50 mΩ (start value)	
Isolation resistance	100 mΩ min. (Megger DC 500 V)	
Voltage resistance	1.5 kV	
Switching frequency	1,200 s/h	
Mechanical life durability	Position 1–2–1: 10^6 switches min. Position 1–2–3–1: 10^5 switches min.	
Electrical durability	10^5 switches (at full load)	
Shock resistance	Operation: 100 m/s^2 Destruction: 500 m/s^2	
Vibration resistance	Operation: 5 … 55 Hz, amplitude 0.5 mm min. Destruction: 16.7 Hz, amplitude 1.5 mm min.	
Type of connection	solder	
Connection diameter	0.5 mm^2 max./wire	
Max. solder temperature	260 °C / 3 seconds max.	
Terminal pulling strength	20 N min.	
Recommended screw torque	0.68 … 0.88 Nm	
Protection class	with rubber cover: IP 65 without rubber cover: IP 40 (IEC 60529)	
Conditional short-circuit current	50 A (250 V)	
Recommended short-circuit protection	250 V / 10 A fast blow fuse (IEC 60127-1)	
Weight	approx. 18 g	
Max. circuit opening force	500 N min.	
Electrical specifications		
Rated operating voltage	125 VAC / VDC	
Rated operating current	3.0 A	
Rating	30 V	125 V
Ohmic load (AC-12)	–	1.0 A
Inductive load (AC-15)	–	0.7 A
Ohmic load (DC-12)	1.0 A	0.2 A
Inductive load (DC-13)	0.7 A	0,1 A
Contact configuration	2 changeover contacts	
Low voltage capability	3 VAC / VDC and 5 mA (reference value)	

в Беларуси Заказ г.Минск viber и тел.+375447584780 email: minsk17@tut.by

Technical data
Continued

Built-in devices for ZSD1..., ZSD2... and ZSD4... (abbreviated form)[1]	
Regulations	IEC EN 60947-5-1/-5
Front side	Plastic-encapsulated, class of protection IP 65
Contacts	Cross-point contacts as NC contacts or NO contacts depending on version, NC contacts positively opening, to IEC EN 60947-5-1/-5
Temperature range	0 ... +65 °C
Connection system and min./max. cable cross section	0.14 ... 1.5 mm^2
Rated operating voltage U_e	125 V
Rated isolation voltage U_i	125 V
Rated operating current I_e depending on utilisation category and test voltage	AC 12: 0.5 A/24 V DC 12: 1 A/24 V
Short circuit protection	gG 3 A
Low voltage capability	5 V/1 mA
Further data	a) see left (Technical daten/electrical specifications of the basic units) b) see Elan-catalogue D-16Z/VZ/07 or upon request
Safety switch TZG... (abbreviated form)[1]	
Regulations	IEC EN 60947-5-1
Class of protection	IP 67 (switching chamber) IP 00 (device head)
Actuating forces	Entering actuator: 10 N Withdrawing actuator: 20 N
Ambient temperature range	0 ... +65 °C
Materials used	Glass-fibre reinforced thermoplastic with self-extinguishing properties to UL 94-V-0, metal parts corrosion protected, with protective cover (metal)
Cable entries	M 20 x 1.5
Connection system	Self-lifting screw terminals with double slot screws
Wire connection	Min. 0.5 mm^2, max. 2 x 2.5 mm^2 rigid and 2 x 1.5 mm flexible with wire-end-ferrules
Terminal labeling	DIN EN 50005/50013
Mechanical serviceable life	Minimum 1 x 10^6 switching cycles
Shock resistance	> 30 g/18 ms
Vibration resistance	> 15 g/10 ... 200 Hz
Climatic resistance to EN 60068	Part 2-30
Rated operating voltage U_e max.	400 V[2)]
Rated isolation voltage U_i	400 V[2)]
Thermal rated current I_{the}[2]	10 A[2)]
Rated operating current U_e depending on utilisation category and test voltage	250 V ~/8 A
Electronic control circuits	24 V/10 mA
Isolation group	C to VDE 0110
Air clearance and creepage to DIN VDE 0110-1 (04/97)	4 kV/3
Short circuit protection	gG 10 A slow-blowing[2)]

1) Further details: upon request; 2) Slow-action version

в Беларуси Заказ г.Минск viber и тел.+375447584780 email: minsk17@tut.by

Circuit suggestions

ZSD1LC.., ZSD1.1LC, ZSD2LC.., ZSD2.1LC, ZSD4..., ZSD5... and ZSD6...
(example with analysis modules SRB 301ST V.2 or SRB 301MC)

Circuit suggestion ZSD4 (2 positions, 1 channel, additionally with 1 emergency STOP pushbutton)

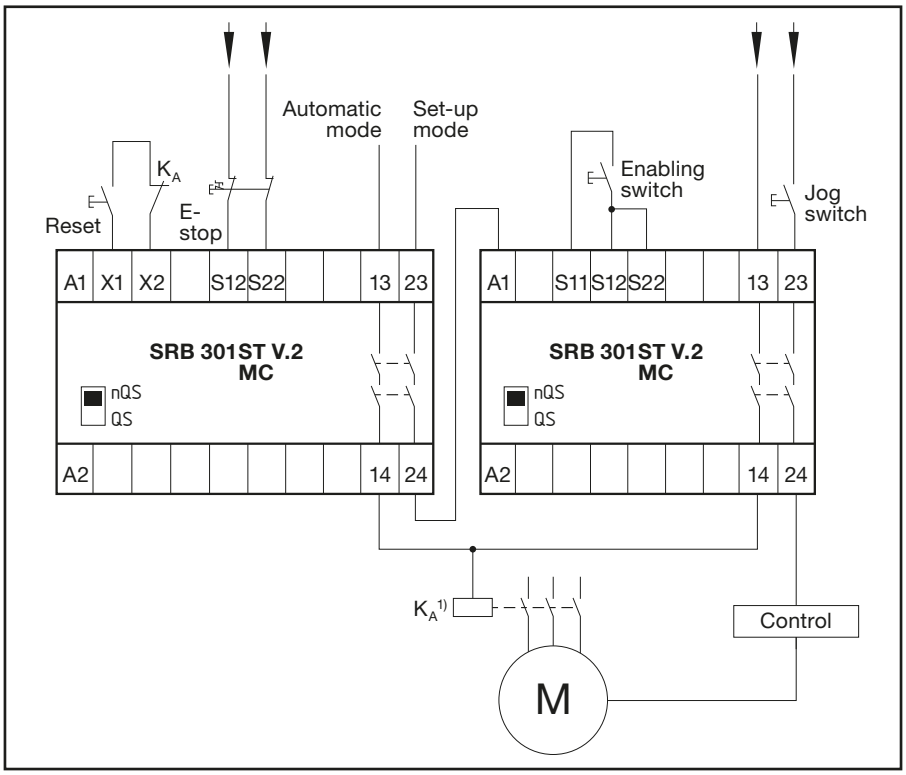

Circuit suggestion ZSD1LC.., ZSD1.1LC, ZSD2LC.., ZSD2.1LC, ZSD5, ZSD6 with analysis operation

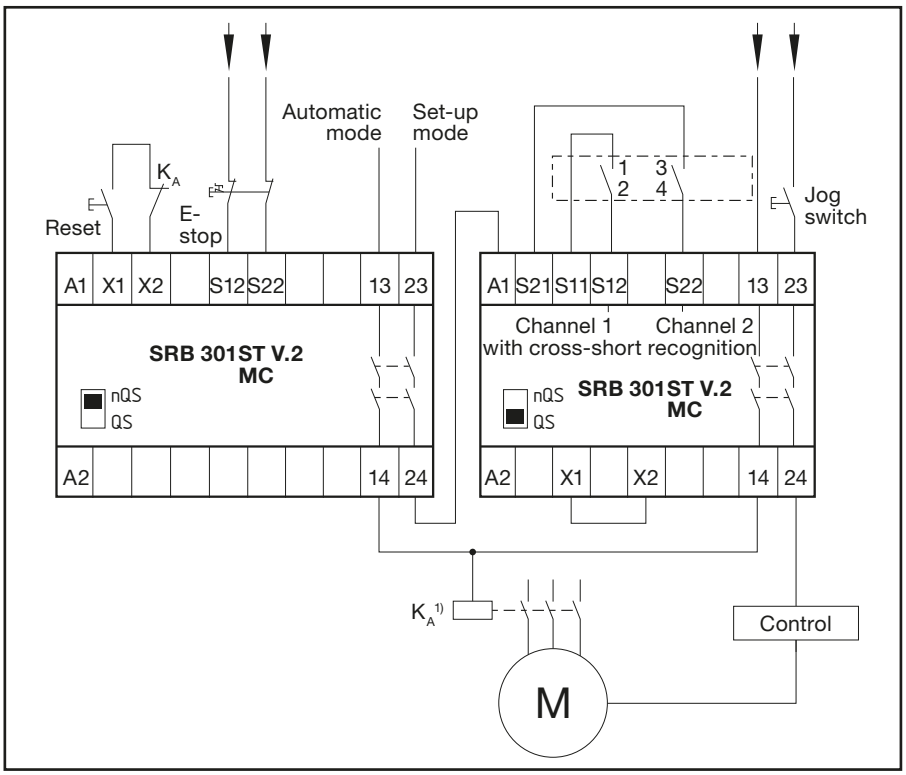

1) Contact amplification or multiplication by relay or contactor with positively driven contacts, possibly 2 channels with positively-driven contacts, category 2, 2-channeled (2 separate contactors)

в Беларуси Заказ г.Минск viber и тел.+375447584780 email: minsk17@tut.by

Notes

в Беларуси Заказ г.Минск viber и тел.+375447584780 email: minsk17@tut.by

Media

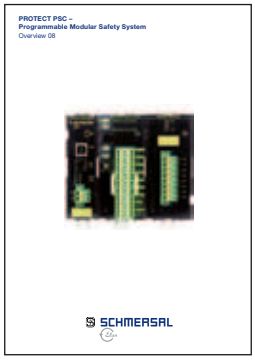

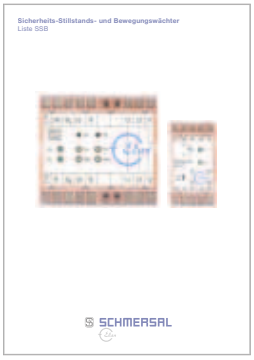

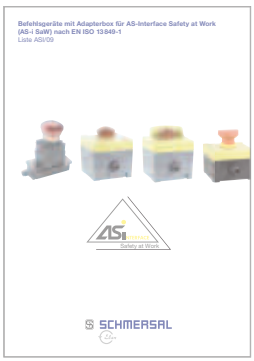

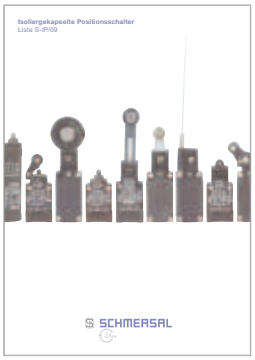

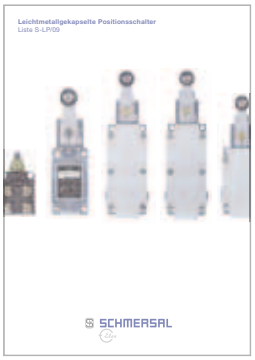

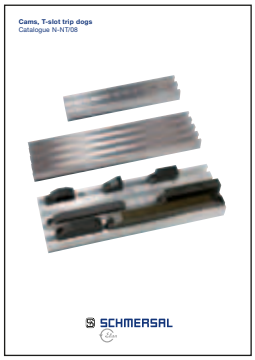

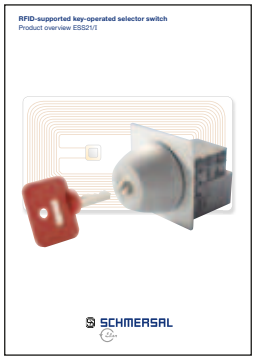

в Беларуси Заказ г.Минск viber и тел.+375447584780 email: minsk17@tut.by

Information request

Gladly we send you copies of the media presented on the opposite side.

Please photocopy this page and send it to:
Elan Schaltelemente GmbH & Co. KG
– by fax: +49 (0)641 9848-421
– by mail: P.O. Box 1109, D-35429 Wettenberg/Germany

Please send us the following media:

- ❑ **Overview “PROTECT SRB’s – Safety relay modules with intrinsically safe monitoring circuits Ex i – Ⓔx-protection for ATEX zones 1, 2, 21 and 22“**
- ❑ **Overview “PROTECT PSC – Programmable Modular Safety System”**
- ❑ **Liste SSB: „Sicherheits-Stillstands- und Bewegungswächter“ (only available in German language)**
- ❑ **Overview PDMS: “Protect Drive Monitoring System”**
- ❑ **Liste D-30: „Befehlsgeräte und Leuchtmelder Einbau-Durchmesser 30,5 mm“ (only available in German language)**
- ❑ **Liste D-22.A/09: „Befehlsgeräte und Leuchtmelder AVANTGARDE“ (only available in German language)**
- ❑ **Catalogue D-22 Ex-R: “Control devices and indicator lights for 22.3 mm installed diameter – Ⓔx Explosion protection for ATEX zones 1, 2, 21 and 22”**
- ❑ **Liste D-16Z/VZ/07: „Befehls- und Meldegeräte für Norm-Einbau-Durchmesser 16,2 mm und Einbau-Raster 25 × 25 mm“ (actually only available in German language)**
- ❑ **Liste ASI/09: „Befehlsgeräte mit Adapterbox für AS-Interface Safety at Work (AS-i SaW)“**
- ❑ **Catalogue D-22E/.V/08: “Control devices and indicator lamps – 22.3 mm ∅”**
- ❑ **Catalogue D-22R: “Control devices and indicator lights for 22.3 mm installed diameter – Heavy duty series”**
- ❑ **Catalogue N/09: “Control devices and indicator lights for food processing machines and heavy-duty applications, 22.3 mm diameter installation”**
- ❑ **Catalogue K/08: “Spring-return joystick switches, maintained joystick switches, maintained/spring-return joystick switches”**
- ❑ **Catalogue ZB/07: “Enabling switches”**
- ❑ **Liste S-IP/09: „Isoliergekapselte Positionsschalter“ (only available in German language)**
- ❑ **Liste S-LP/09: „Leichtmetallgekapselte Positionsschalter“ (only available in German language)**
- ❑ **Liste RP/08: „Reihen-Positionsschalter nach DIN 43697“ (only available in German language)**
- ❑ **Catalogue N-NT/08: “Cams, T-slot trip dogs”**
- ❑ **Catalogue N-TR/08: “Radial cams, T-slot cam semicircles/T-slot cam drums”**
- ❑ **Catalogue ZHS/08: “Sub-assemblies for two-hand control consoles”**
- ❑ **Catalogue WL/09: “ESALAN Wireless – Safety-oriented radio link”**
- ❑ **Overview ESS21/I: “RFID-supported key-operated selector switch”**
- ❑ **Catalogue T/04: “Interlocking devices with and without guard locking”**

Company _____

Sender _____

Phone _____

Fax _____

E-mail _____

Department _____

Street _____

ZIP, City _____

в Беларуси Заказ г.Минск viber и тел.+375447584780 email: minsk17@tut.by

Safety in system: Protection for man and machine.

Innovations 2012/2013

SCHMERSAL

Safe solutions for your industry

в Беларуси Заказ г.Минск viber и тел.+375447584780 email: minsk17@tut.by

The Schmersal system

Smooth, safe, flexible

- Individually scalable safety solutions for different machine sizes
- Smooth, fail-safe installation and wiring of the safety switchgear through AS-Interface
- Comfortable configuration of the safety solution through the "ASIMON" Drag & Drop software
- Complete diagnostic of the entire safety circuit and all connected safety switchgears by the control system
- High operational safety because of the individually configurable safety-monitoring modules
- The safety functions can be smoothly changed or extended later on
- Complete solutions including all accessories

More information can be found in the brochure
"SCHMERSAL System Solutions - AS-Interface Safety at Work"

в Беларуси Заказ г.Минск viber и тел.+375447584780 email: minsk17@tut.by

Solenoid interlock AZM300

One for all mounting situations

- Symmetrical mounting for right- and left-hinged doors
- Can be used as end stop
- 3 actuating directions
- Switchable latching force (25 N / 50 N)
- PL e / SIL 3
- More than 30,000 different codings
- Serial diagnostic
- Actuator or solenoid interlock monitoring
- Power to lock or power to unlock
- Protection class IP69K

More detailed information can be found in the brochure
"More than just a solenoid interlock - AZM300"

в Беларуси Заказ г.Минск viber и тел.+375447584780 email: minsk17@tut.by

Products

Safety sensor RSS 36 AS - Switch distance 10 mm, protection class IP69K

- Electronic safety sensor
- Repeated universal or individual coding
- Enhanced protection against tampering through RFID technology
- High tolerance to horizontal and vertical misalignment with pre-indication in hysteresis area
- Optionally with integrated magnetic latching
- Suitable for applications
  - up to PL e / category 4 to EN ISO 13849-1
  - and SIL 3 to IEC 61508
- Protection class IP69K

Code number: C-84RSS3

Safety sensor EX-BNS 40S - Explosion-proof for ATEX Zone 2 and 22, protection class IP69K

- Coded magnetic safety sensor for use in gas and dust explosion-endangered areas
- Category 3GD, ATEX Zone 2 and 22
- Suitable for food processing industry
- Stainless steel enclosure
- Connecting cable suitable for the food-processing industry
- Concealed mounting possible
- Long life
- No mechanical wear
- Insensitive to soiling
- Insensitive to transverse misalignment
- Protection class IP69K

Safety sensor BNS 36-2750 - Increased switching distance 10 mm

- Coded magnetic safety sensor
- Increased switching distances - s_{ao}: 10mm, s_{ar}: 20mm
- Tolerates axial and height misalignment
- Safety contacts NC/NO or NC/NC
- Optional signalling contact
- Connector plug M8
- LED switching condition indication

Detailed information about the products can be found at: **www.schmersal.net** below the code numbers either directly through the QR-code.

в Беларуси Заказ г.Минск viber и тел.+375447584780 email: minsk17@tut.by

PROTECT SELECT - The flexible compact safety controller in 52 mm enclosure

- Replaces up to 8 safety relays
  - up to PL e / Category 4 to EN ISO 13849-1
  - and SIL 3 to IEC 61508
- Optimal adaptation to the application by individual parameter setting
- No programming skills required
- Safe inputs for the redundant inquiry of all commonly available safety switchgears, e.g. emergency stop switches, sensors, solenoid interlocks, light grids and curtains, safety mats, etc.
- Safe analogous inputs for integrating critical process parameters (temperature, pressure, flow rate, etc.)
- Safe relay and semi-conductor outputs with STOP 0/1 function with programmable timer
- Automatic or manual reset function
- Optionally with short-circuit recognition

Code number: PROTECT SELECT

Safety light curtain SLC 440 - Optimised customer and industry solution

- Industry solution for the paper-processing industry
- Type 4 safety light curtain with a 10 ms reaction time
- Suitable for SIL 3 applications to IEC 61508
- Protection field height 410 mm, resolution 14 mm
- The length of the protection field is equal to the sensor length (no dead spaces)
- Integrated status display
- Functional optimisation automatic or reset mode

Protective enclosure SG5 / SG6 - Robust protective enclosure for safety light grids and light curtains

- Protection for safety light curtains / light grids and deflecting mirror, also suitable for rough ambient conditions
- Protection field height up to 1200 and 1770 mm
- Sensor with arbitrary height adjustment
- Comfortable adjustment of the vertical axis
- Mounting plate with slotted holes for smooth set-up
- Compensation of uneven floors by means of adjusting screws
- Protection against ambient influences: operational protective disk SGS (self-adhering) available
- Accessory deflecting mirror ULS-SG-1000 available

Detailed information about the products can be found at: **www.schmersal.net** below the code numbers either directly through the QR-code.

в Беларуси Заказ г.Минск viber и тел.+375447584780 email: minsk17@tut.by

Safety foot switch T2FH 232 - 2-pedal

- Use as enabling switch
- Combination of safety and process function enabled
- Different contact variants
- Positive break NC contact
- Robust metal enclosure
- Protection class IP65

Code number: C-02TFH2

Pull-wire switch TQ 700 S - Signal generator for electrical machinery and gate/door drives

- Signal generator for instance for gate and door drives
- Wire pull detection
- Pull wire with ball available as accessory
- Different contact variants
- Positive break NC contact
- Protection class IP67

Code number: C-08TQ70

Position switch ZAF - With spring rod lever

- Can be deflected in any direction
- Can be used in case of changed actuation conditions
- Suitable for low actuating speeds
- For position switches of the series 235, 236 and 256
- Protection class IP67

Detailed information about the products can be found at: **www.schmersal.net** below the code numbers either directly through the QR-code.

в Беларуси Заказ г.Минск viber и тел.+375447584780 email: minsk17@tut.by

AZ/AZM 200-B30-…-SZ – Actuator for hinged guard with integrated lockout tag

- Possibility to install up to 3 locks
- Smooth and intuitive operation
- Various handles available, no supplementary door handles required
- Optionally with emergency exit
- With integrated door detection sensor
- No risk of injury from protruding actuator

Clean room certificate for the control devices and indicator lights of the N series

- The command devices and indicator lights as well as the stainless steel enclosures of the N series are suitable for use in clean rooms of the highest cleanliness class for room air particle counts, air cleanliness class 1, to ISO 14644-1 .
- In addition to that, a recommendation for use in hygienic production environments up to GMP class C to EG-GMP-Guideline, Appendix 1, is issued.
- The GMP rules place high requirements on the production environment of sterile products.

Code number: ˝N˝ Programm

Fraunhofer IPA TESTED DEVICE

Detailed information about the products can be found at: **www.schmersal.net** below the code numbers either directly through the QR-code.

в Беларуси Заказ г.Минск viber и тел.+375447584780 email: minsk17@tut.by

Literature

New brochures

- More than just a solenoid interlock - AZM300

Code number: 103002024

Best of MRL-News

The Schmersal Group regularly publishes MRL-NEWS to keep machinery and plant builders up-to-date on the latest news, discussions and current issues regarding functional machinery safety.

The most important articles from these publications have been published in a book called "Best of MRL-News" and completed by up-to-date themes. You will be provided with information on the current legal matters in machinery safety as well as on the latest innovations regarding the technical development of safety components.

This 220-page illustrated book can be ordered **for free** from Schmersal.

Code number: 101215470

в Беларуси Заказ г.Минск viber и тел.+375447584780 email: minsk17@tut.by

Safety Services

Professional competence for the practice

Machinery safety is a challenging and multi-layered theme, which issues major challenges both to machine builders and safety engineers. After all, during the selection of safety systems, many directives and standards must be observed and especially the new regulations, such as:

- EN ISO 13849-1
- EN 62061
- IEC 61508

These are complex regulations, which require sufficient time and expertise to be adequately understood.

Safety Consulting: Adequate consultancy from the start

An increasing number of companies are searching for assistance and consultancy for the implementation of these regulations. With the help of experts, very specific issues can be addressed faster and safer. That is why the Schmersal Group has pooled its expertise for this kind of tasks and entrusted the “Safety Consulting” to highly qualified specialists.

The service portfolio from the Safety Consulting is clearly structured.

The Consultants can be consulted by the customers, amongst others, on the following problems:

- Application consultancy
- Run-on time measurement
- Risk analysis to EN ISO 12100:2010
- Conformity assessment procedure

Of course, the Consultants will be pleased to answer questions beyond these subject areas. To that effect, they have direct access to the knowledge of the different specialist departments from the Schmersal Group, from product management to the R&D department and the standardisation, committee and association work groups.

Assistance from experts

Some 30 experienced collaborators from the Schmersal Group from 18 countries were qualified as machine safety experts. They closely collaborate with the local sales engineers and the product management.

Comprehensive know how

When our Safety Consultants are configuring standard-compliant safety systems, they can rely on comprehensive and highly practice-oriented know how. The participation of the Schmersal Group in various standardisation panels provides for the necessary theoretical background, which is required for the selection or configuration of standard-compliant guard systems.

Application Centre: Service provision for the safety of man and machine

To offer our customers an even more intensive consultancy, we have established the Application Centre. In addition to the sales engineers and the technical sales, this is the field of operation of the application engineers.

For complex issues: the CE Network

In Germany the Safety Consultants closely collaborate with our CE Network, they can rely on comprehensive expert knowledge for special issues. This network of competent engineering companies, which was initiated by the Schmersal Group, provides mechanical engineers with competent advice on complex themes regarding machine safety. The CE Network has a specialist for any extraordinary problem and provides an answer to any question.

More information: www.ce-netzwerk.com

в Беларуси Заказ г.Минск viber и тел.+375447584780 email: minsk17@tut.by

The Schmersal Group

For many years the privately owned Schmersal Group has been developing and manufacturing products to enhance occupational safety. What started out with the development and manufacture of a very wide variety of mechanical and non-contact switchgear has now become the world's largest range of safety systems and solutions for the protection of man and machine. Over 1,200 employees in more than 50 countries around the world are developing safety technology solutions in close cooperation with our customers, thus contributing to a safer world.

Motivated by the vision of a safe working environment, the Schmersal Group's engineers are constantly working on the development of new devices and systems for every imaginable application and requirement of the different industries. New safety concepts require new solutions and it is necessary to integrate new detection principles and to discover new paths for the transmission and evaluation of the information provided by these principles. Furthermore, the set of ever more complex standards, regulations and directives relating to machinery safety also requires a change in thinking from the manufacturers and users of machines.

These are the challenges which the Schmersal Group, in partnership with machinery manufacturers, is tackling and will continue to tackle in the future.

Product ranges

Safe switching and monitoring
- Guard door monitoring safety switches
- Command devices with safety function
- Tactile safety devices
- Optoelectronic safety devices

Safe signal processing
- Safety monitoring modules
- Safety controllers
- Safety bus systems

Automation
- Position detection
- Command and signalling devices

Industries

- Elevators and escalators
- Packaging
- Food
- Machine tools
- Heavy industry

Services

- Application advice
- CE conformity assessment
- Risk assessment in accordance with the Machinery Directive
- Stop time measurements
- Training courses

Competences

- Machine safety
- Automation
- Explosion protection
- Hygienic design

All data mentioned in this flyer have been carefully checked.
Technical modifications and errors excepted.

www.schmersal.com

SCHMERSAL
Safe solutions for your industry

3.000 / L.D. / 11.2012 / Teile-Nr. 101211017 / Ausgabe 05

в Беларуси Заказ г.Минск viber и тел.+375447584780 email: minsk17@tut.by

A package full of solutions

Packaging

SCHMERSAL

Safe solutions for your industry

в Беларуси Заказ г.Минск viber и тел.+375447584780 email: minsk17@tut.by

Safety systems for the packaging industry

Safety in system: Protection for man and machine - under this motto, the Schmersal Group develops and produces safety switching appliances and systems for the entire machinery and plant construction for decennia already. In some industries, special and additional requirements are applicable. As customer-focussed company, who intensively deals with the wishes of the manufacturer and users of machines, Schmersal has taken up these challenges from the start. As a result, specific products and solutions were developped for many industries and for some of them, an own portfolio has been developped as well.

One mission - different requirements

Disposable syringes, oatmeal or headache tablets: in the packaging technology, a wide range of requirements is applicable. The Schmersal Group offers products and solutions for the safety of machinery in different fields of the packaging machinery construction.

- Non-food
- Food-processing industry
- Pharmacy
- Medical technology.

Especially for the sensitive fields of the packaging technology, we have developped tailor-made product series, which do not only guarantee the safety of the machine, but also contribute to an enhanced productivity and availability. This applies for instance to plants, which were developped according to the Hygienic Design standards and to machines, for which the directives regarding the dust-explosion protection must be observed during the filling and packing of bulk goods.

High performance, high pace

A traditional industry, on which the Schmersal Group focuses, is the packing machinery construction. In this industry, machinery and plants are often operated at high pace with short cycle times. They are frequently integrated in the entire production and/or packaging lines as well. This has major consequences for the selection and the design of safety systems.

- The safety guards must not interrupt the production cycles nor affect the productivity of the plants.
- They must run with highest reliability.

Highest availability

The safety switchgear from the Schmersal Group are characterised by a long life-time even under unfavourable conditions and when operated 24/7. Many series, especially those, which are preferably used in the packing machinery industry, are designed so that any stop of the machine is avoided when possible.

An example: safety sensors, safety switches and solenoid interlocks equipped with the Schmersal-patented CSS technology detect the slightest misalignment of the guard door and transmit a corresponding message to the control or the master display. The user then can realign the guard door before it become misaligned to such extent that for instance the safety sensor no longer responds to the actuator, thus preventing the start-up of the machine

Information provides for transparency

In complex plants, the communication between individual components is highly important. The Schmersal Group therefore offers a Diagnostic Gateway, for instance for the CSS series, for the transmission of non-safety-related, diagnostic-information through default bus protocols. This provides for enhanced availability and quick troubleshooting in case of a failure.

The use of the "AS Interface Safety at Work" standard is also useful for the transmission of safety-related signals. Here, the user benefits from considerably reduced installation efforts and overheads as well as enhanced diagnostic possibilities - features, which are applauded within packing machinery construction. The Schmersal Group therefore offers a comprehensive programme of safety switchgear with integrated AS-i Safety interface.

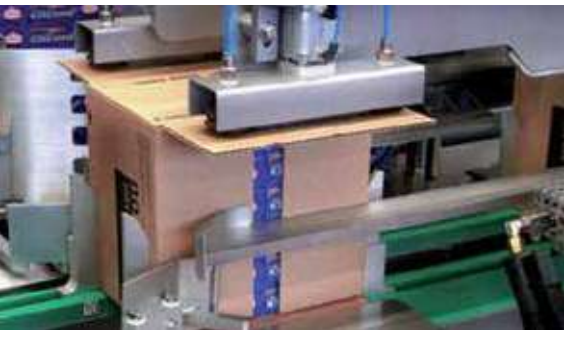

Source 1)

Source 1)

в Беларуси Заказ г.Минск viber и тел.+375447584780 email: minsk17@tut.by

Quick troubleshooting

Packing machinery accomplish highly complex process cycles, in part with highly filigree materials. Some machine types therefore tend to present failures more often than others, where the processes are more stable due to the applied materials and work cycles. Safety solutions from Schmersal can be configured to enable a fast and safe elimination, for instance of jammed materials. The protection against tampering thereby plays an important role as well

New developments for vibrating machinery

The packing machinery construction industry often uses solenoid interlocks to avoid operators interrupting the process by opening a safety guard when the machine is running. To enable the smooth insertion of the actuator, safety switches often have a large play at the insertion opening. As a result, the machine vibrations could cause rattling of the safety guards. For this special problem, Schmersal has developped an innovative solution, the non-contact MZM 100 solenoid interlock. This solenoid interlock generates the standard-compliant holding force of 500 N pure magnetically to exclude any rattling!

Source 2)

Dust-explosion protection

When filling and packing organic dusts, the regulations regarding the dust-explosion protection must be observed. This applies both to foodstuffs in powder form, pharmaceutics and animal feedstuff. The Schmersal Group offers a comprehensive programme of switchgear for automation and machinery safety, which is tested and certified in accordance with the ATEX and IECEx Directives.

Hygiene

During the packing of foodstuff and pharmaceutical products, special hygienic requirements must be observed as well. For the different hygienic zones (dry zone, splashing zone, wet zone and aggressive zone), Schmersal offers solutions, which meet the "Hygienic Design". These solutions also include safety sensors, which can be smoothly cleaned due to the smooth surfaces of the sensor and the actuator and which are moreover suitable for concealed mounting. Depending on the requirements of the application, the safety switchgear are accordingly approved and certified in accordance with the foodstuff technology standards (Eco-lab, 3A Sanitary, FDA etc.).

Experience exchagen in the Packaging Excellence Center

The Schmersal Group aims at establishing good contacts and exchanging experiences with manufacturers of food-processing machinery so that new switchgear is developped and the individual consultancy is provided with the highest level of practice-orientation.

Schmersal is also member of the "Packaging Excellence Center" (PEC). This Centre of Competence for the packaging and automation technology joins the leading German companies of the packing machinery construction.

International presence

The majority of packing machinery builders are operating at international level. This is true, not only for the “big players” on the market, but also for the numerous medium-sized companies, which are specialised in defined segments of market, fields of application or packaging technologies. These enterprises can rely on Schmersal for competent service and consultancy in approximately 50 nations – according to the motto: safe solutions for your industry.

Services

Machine safety is a complex theme. The Schmersal Group offers its customers comprehensive support for the implementation of standards and guidelines in high-production machinery and plants. The service portfolio include, amongst other things, seminars in the Wuppertal tec.nicum training centre as well as individual consultancy for machine builders and safety engineers by certified Safety Consultants in more than 20 countries.

в Беларуси Заказ г.Минск viber и тел.+375447584780 email: minsk17@tut.by

Safety switch with separate actuator

Safety switch with separate actuator

AZ 15/16 - Code number: C-49AZ15

AZ 200 - Code number: C-74AZ20

AZ 17 - Code number: C-61AZ17

Application

Safety switches with separate actuated are intensively used in the entire production and in almost all fields of the packaging industry. They are suitable for the position monitoring of sliding, hinged and especially removable safety guards, which need to be closed to ensure the required operational safety.

In additional to the universally-popular AZ 16 (left), different series are available, which can be fitted, amongst other things, on profiles as well as in confined mounting spaces and moreover can be used for modernisation and retrofitting purposes. The programme also includes coded versions, which guarantee a high level of protection against tampering.

- Up to 4 safety contacts
- Metal and thermoplastic enclosure
- Long life
- Optionally with individual coding
- A wide range of accessories is available
- Versions with connector and cable

Solenoid interlocks

AZM 300 - Code number: C-96AZM3

MZM 100 - Code number: C-91MZM1

AZM 170 - Code number: C-41AZM1

Application

The solenoid interlocks of the AZM series have been designed to prevent sliding, hinged and removable safety guards, e.g. fences or doors from being opened before hazardous conditions (e.g. run-on movements) have been eliminated. The necessary signal is transmitted to the solenoid interlocks through fail-safe standstill monitors or fail-safe delay timers.

As an alternative to the AZM series, the MZM 100 is available, a non-contact solenoid interlock, whose latching force of 500 N is electromagnetically generated. This innovative product has been especially developped to match the requirements of the packaging industry.

- Holding force of 500 - 3500 N
- Up to 5 safety contacts
- Metal and thermoplastic enclosure
- Long life
- Optionally with individual coding
- Non-contact solenoid interlocks
- A wide range of accessories is available
- Versions with connector and cable

Detailed information about the products can be found at: www.schmersal.net below the indicated code numbers

в Беларуси Заказ г.Минск viber и тел.+375447584780 email: minsk17@tut.by

Position switch with safety function

Position switches to EN 50047 / 50041

Z/T 196 - Code number: C-82196

Z/T 235/236 - Code number: C-08236

Z/T 335/336 - Code number: C-12335

Application

Position switches with safety function can be used for various positioning tasks of packages and conveyed material as well as linear axes and conveyor belts. The position monitoring of safety guards is another popular field of application for these switches.

Due to their standardised mounting dimensions, this switchgear is universally applicable. Different actuating elements are available for an optimal adjustment of the individual series to the specific application.

- Plastic and metal enclosure
- Different designs
- Mounting dimensions to EN 50047 or EN 50041
- Actuating elements for various applications
- Versions with connector and cable

Hinge safety switch

T.C 235/236 - Code number: C-53TC23

TV.S 335 - Code number: C-34TV8S

TVS 410 - Code number: C-56TVS4

Application

Wherever the mounting space is confined or special requirements with regard to tamper protection must be met, the use of hinge safety switches is recommended as an alternative to the conventional safety switches with separate actuator.

Here, the safety-related monitoring function is integrated in the switch. In this way, small guards and service doors, e.g. of automatic conveying systems, as well as heavy hinged door on large packaging machines can be (depending on the series used) protected as to provide for easy fitting and maintenance as well as compliance with the standards.

- Plastic and metal enclosure
- Suitable for standard profile systems
- Positive linkage without cam
- Additional hinges and universal joints to simplify fitting

Detailed information about the products can be found at: www.schmersal.net below the indicated code numbers

в Беларуси Заказ г.Минск viber и тел.+375447584780 email: minsk17@tut.by

Non-contact safety sensors

0Electronic and magnetic safety sensors

BNS 260 - Code number: C-71BNS2

RSS 36 - Code number: C-57RSS3

CSS 180 - Code number: C-22CSS1

Application

The use of safety sensors is of particular advantage, in cases where extremely dirty conditions can occur or high hygienic prescriptions must be met. These requirements especially apply to packaging machinery used in the food processing industry. Due to the smooth surface, both the switchgear and the actuator can be easily cleaned; some series meet the basic principles of "Hygienic Design".

With the CSS technology, the Schmersal Group has developped an operating principle, which offers considerable advantages for the safety of machinery in actual practice. The CSS technology provides for instance comprehensive diagnostic information, which enables fast localisation of faults. This is particularly advantageous on interlinked packaging plants or on machinery with many stations and safety guards.

- Plastic and stainless steel enclosure
- Many coding options
- Based upon the latest RFID technology
- With integrated logic circuit for monitoring and evaluation
- Protection class up to IP69K
- Insensitive to transverse misalignment
- Insensitive to soiling

Optoelectronic safety devices

SLB 200 - Code number: C-43SLB2

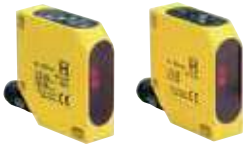

SLB 400 - Code number: C-86SLB4

SLC 420 IP 69K - Code number: C-69SLC4

Application

Optoelectronic safety devices such as safety light barriers, safety light grids and safety light curtains are used to protect access to hazardous points or hazardous areas. Compared to the separating safety guards, they provide for an enhanced flexibility.

Through muting and blanking functions, they can be set so that conveyed products and/or packaging material can get into the hazardous area, whilst persons are detected immediately.
The programme from the Schmersal Group also includes optoelectronic safety guards with protection class IP 69K, which are suitable for the hygiene-critical areas of foodstuff packaging.

- Type 2 and 4 safety light grids and curtains to IEC/EN 61496-1, -2
  - Protection class up to IP69K
  - Optionally with muting and blanking functions
- Safety light barriers range 4 - 15 m

Detailed information about the products can be found at: www.schmersal.net below the indicated code numbers

в Беларуси Заказ г.Минск viber и тел.+375447584780 email: minsk17@tut.by

Controlling, signalling and evaluating

Control devices and indicator lights

BDF 200AS - Code number: BDF 200

ZSD 6 - Code number: C-78ZSD

NAS 311 - Code number: C-87NAS3

Application

At the man-machine interface of packaging machinery, command devices and indicator lights keep the operator informed about the operating condition and take care of the communication with the machine . The Schmersal Group has a comprehensive portfolio of command devices, which have been developped especially for industrial applications

This offer includes a series for rough operating conditions as well as a series designed in accordance with the "Hygienic Design" principles, which is used in the automated foodstuff packaging. New in the programme are the compact, modular control panels of the BDF series, which can be fitted onto common profile systems.

- Emergency stop button
- Pull-wire emergency stop switches
- Two-hand control panels
- Enabling switches
- Tactile sensors
- Foot switches
- Pushbuttons, selectors and indicator lights

Safety monitoring modules and safety controllers

Code number: SRB

Code number: PROTECT-SELECT

Code number: PROTECT PSC

Application

Safety monitoring modules and safety controllers are used for the safe evaluation of switching signals. Possible signal generators are, for instance, mechanical position switches, safety switches, solenoid interlocks, safety sensors as well as command and signalling devices.

Besides a very comprehensive programme of safety relay modules, the Schmersal Group offers the PROTECT PSC safety controllers for the packaging machinery industry, which can be combined with safe speed monitoring through the PDMS system. One of the latest innovations is the compact PROTECT-SELECT safety controllers, which can be easily configured without programming knowledge.

- Safety-monitoring modules
- Compact safety controllers
- Safety bus systems

Detailed information about the products can be found at: www.schmersal.net below the indicated code numbers

в Беларуси Заказ г.Минск viber и тел.+375447584780 email: minsk17@tut.by

The Schmersal Group

For many years the privately owned Schmersal Group has been developing and manufacturing products to enhance occupational safety. What started out with the development and manufacture of a very wide variety of mechanical and non-contact switchgear has now become the world's largest range of safety systems and solutions for the protection of man and machine. Over 1,400 employees in more than 50 countries around the world are developing safety technology solutions in close cooperation with our customers, thus contributing to a safer world.

Motivated by the vision of a safe working environment, the Schmersal Group's engineers are constantly working on the development of new devices and systems for every imaginable application and requirement of the different industries. New safety concepts require new solutions and it is necessary to integrate new detection principles and to discover new paths for the transmission and evaluation of the information provided by these principles. Furthermore, the set of ever more complex standards, regulations and directives relating to machinery safety also requires a change in thinking from the manufacturers and users of machines.

These are the challenges which the Schmersal Group, in partnership with machinery manufacturers, is tackling and will continue to tackle in the future.

Product ranges

Safe switching and monitoring
- Guard door monitoring safety switches
- Command devices with safety function
- Tactile safety devices
- Optoelectronic safety devices

Safe signal processing
- Safety monitoring modules
- Safety controllers
- Safety bus systems

Automation
- Position detection
- Command and signalling devices

Industries

- Elevators and escalators
- Packaging
- Food
- Machine tools
- Heavy industry

Services

- Application advice
- CE conformity assessment
- Risk assessment in accordance with the Machinery Directive
- Stop time measurements
- Training courses

Competences

- Machine safety
- Automation
- Explosion protection
- Hygienic design

All data mentioned in this flyer have been carefully checked.
Technical modifications and errors excepted.

www.schmersal.com

3.000 / L+W / 03.2013 / Teile-Nr. 1215776 / Ausgabe 02

Photo Credits: 1) meurer Verpackungsmaschinen GmbH, Fürstenau
2) K.A. Schmersal GmbH

SCHMERSAL
Safe solutions for your industry

в Беларуси Заказ г.Минск viber и тел.+375447584780 email: minsk17@tut.by

Input expander module
PROTECT-PE

SCHMERSAL

Safe solutions for your industry

в Беларуси Заказ г.Минск viber и тел.+375447584780 email: minsk17@tut.by

PROTECT-PE

Safe sensor combination

Operating principle

- Connection of up to 4 safety-related sensors per input expander
- Signal processing and summary of individual sensor signal of a redundant safety output
- Evaluation by a downstream safe safety-monitoring module
- Can be combined with devices of PROTECT-SRB and PROTECT-SELECT series
- Can be used up to PL d / SIL 2

в Беларуси Заказ г.Минск viber и тел.+375447584780 email: minsk17@tut.by

and evaluation

User-friendly

- Possibility to connect up to 4 sensors per interface
- Cascading possible for the connection of up to 80 sensors
- Cage clamps

Flexible

PROTECT-PE 02

- Connection of sensors with two NC contacts
- Possibility to connect contacts connected to potential, e.g. AOPD, CSS and RSS
- Deactivation of the cross-wire short monitoring through DIP switches

PROTECT-PE 11

- Connection of antivalent sensors with NC/NO contacts

PROTECT-PE 11 AN

- Connection of antivalent sensors with NC/NO contacts
- Antivalent output level

Diagnostic and visualisation

- 6 LED's to indicate switching conditions
- Semi-conductor signalling output for each sensor plus group signal
- Potential-free signalling contact

в Беларуси Заказ г.Минск viber и тел.+375447584780 email: minsk17@tut.by

Applications of input expanders

The possibility to combine different safety sensor with each other and the user-friendly diagnostics are the essential features of the input expanders of the PROTECT-PE programme.

The individual sensor signals of a safety output are summarised and subsequently redundantly monitored by a safe monitoring module. In this way, they are optimally suitable for use on machinery and plants, where multiple sensors act on one safety function.

For diagnostic purposes, every sensor signal can be separately read into a higher-level control system and optionally the function of the group signal can be used. In addition to that, a potential-free signalling contact is supplementary available. The signalling outputs Y1-Y5 and the corresponding LED at the device signal that the safety guard is opened by emitting a 24V signal. This variable diagnostic function offers the user many possibilities to customise the visualisation as desired.

Especially on larger plants or when multiple sensors are used, the cascading of the input expanders offers a major advantage, without sacrificing the accurate diagnostic of each individual sensor.

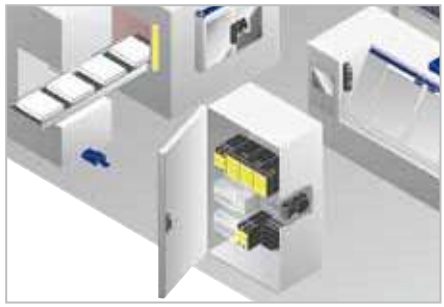

в Беларуси Заказ г.Минск viber и тел.+375447584780 email: minsk17@tut.by

Wiring example

Example of the wiring of four different safety-related sensors to the PROTECT-PE 02 input expander with evaluation through a downstream safety-monitoring module

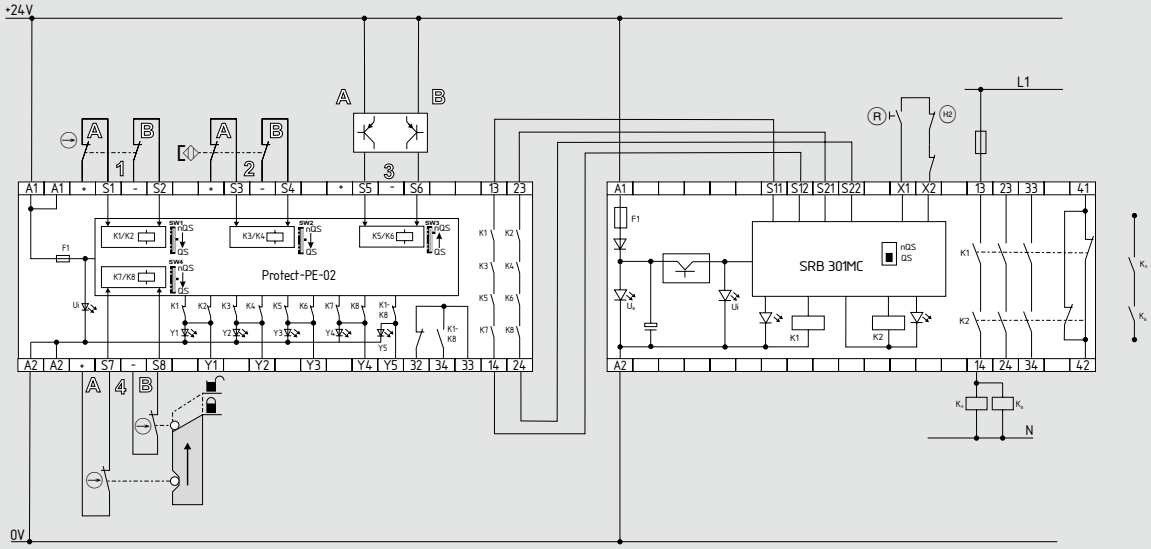

Cascading of multiple input expanders

The simple cascading of the input expanders enables the user to set up a series-wiring of up to 20 devices if needed. This corresponds to a signal processing of up to 80 sensors.

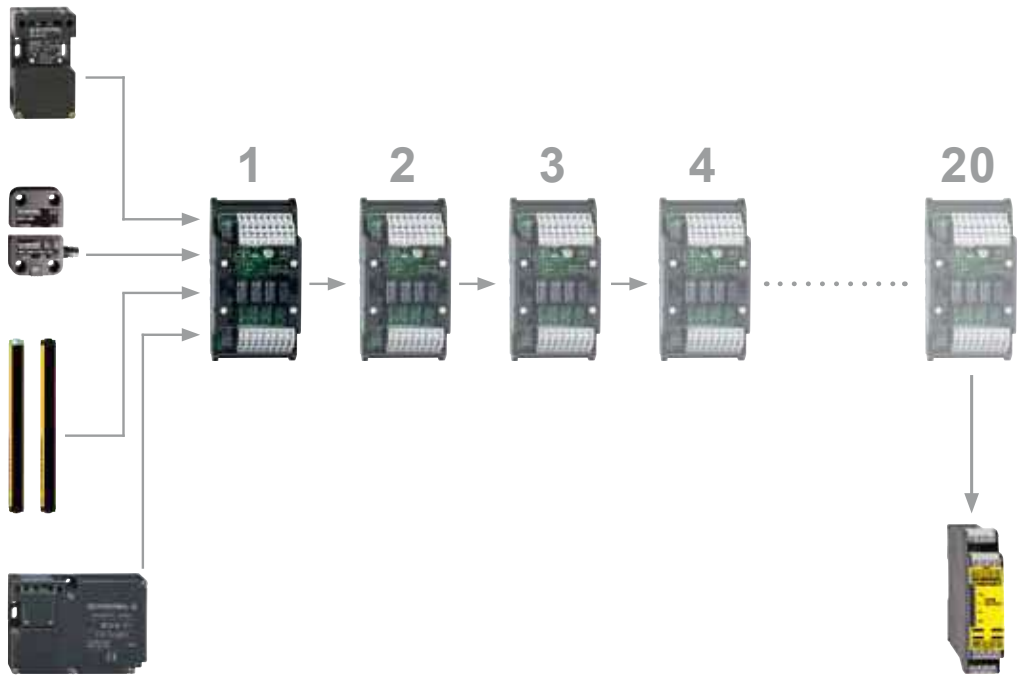

в Беларуси Заказ г.Минск viber и тел.+375447584780 email: minsk17@tut.by

The Schmersal Group

For many years the privately owned Schmersal Group has been developing and manufacturing products to enhance occupational safety. What started out with the development and manufacture of a very wide variety of mechanical and non-contact switchgear has now become the world's largest range of safety systems and solutions for the protection of man and machine. Over 1,200 employees in more than 50 countries around the world are developing safety technology solutions in close cooperation with our customers, thus contributing to a safer world.

Motivated by the vision of a safe working environment, the Schmersal Group's engineers are constantly working on the development of new devices and systems for every imaginable application and requirement of the different industries. New safety concepts require new solutions and it is necessary to integrate new detection principles and to discover new paths for the transmission and evaluation of the information provided by these principles. Furthermore, the set of ever more complex standards, regulations and directives relating to machinery safety also requires a change in thinking from the manufacturers and users of machines.

These are the challenges which the Schmersal Group, in partnership with machinery manufacturers, is tackling and will continue to tackle in the future.

Product ranges

Safe switching and monitoring
- Guard door monitoring safety switches
- Command devices with safety function
- Tactile safety devices
- Optoelectronic safety devices

Safe signal processing
- Safety monitoring modules
- Safety controllers
- Safety bus systems

Automation
- Position detection
- Command and signalling devices

Industries

- Elevators and escalators
- Packaging
- Food
- Machine tools
- Heavy industry

Services

- Application advice
- CE conformity assessment
- Risk assessment in accordance with the Machinery Directive
- Stop time measurements
- Training courses

Competences

- Machine safety
- Automation
- Explosion protection
- Hygienic design

All data mentioned in this flyer have been carefully checked.
Technical modifications and errors excepted.

www.schmersal.com

SCHMERSAL
Safe solutions for your industry

PDF / KAS / 11.2012 / Teile-Nr. 103002030 / Ausgabe 01

в Беларуси Заказ г.Минск viber и тел.+375447584780 email: minsk17@tut.by

Schmersal **Минск т.80447584780** Viber **email minsk17@tut.by**
www.fotorele.net www.tiristor.by радиодетали, электронные компоненты
tel.+375 29 758 47 80 мтс

каталог, описание, технические, характеристики, datasheet, параметры, маркировка, габариты, фото, даташит, Schmersal

где и как купить в Минске?

Сделать заявку или запрос можно по телефону факсу или по электронной почте
Просим Вас указывать в заявке:
— название предприятия, факс, контактный телефон, контактное лицо;
— полное наименование и количество товара;
— возможность замены или аналоги;

Каталог Schmersal

Автоматизация

Герконы
Датчики безопасности
Индуктивные датчики IFL
Концевые выключатели
Микропереключатели
Переключатели с тросовым приводом
Переключатели механизмов
Переключатели положения ленты
Позиционные переключатели с функцией безопасности
Проволочные переключатели
Фотоэлектрические датчики приближения
Энкодеры

Безопасное переключение и мониторинг Schmersal

Аварийные выключатели
Блокиратор дверей
Выключатели безопасности для ограждений
Двуручные пульты управления
Кнопки аварийного останова
Ножные переключатели
Панели управления
Позиционные переключатели с функцией безопасности
Предохранительные выключатели с раздельным приводом
Световые барьеры безопасности
Световые решетки и световые завесы
Соленоидные блокировщики

Обработка сигналов

Защитные дверные мониторы и модули контроля безопасности
Многофункциональные модули безопасности
Отказоустойчивые мониторы и таймеры
Программируемые контроллеры
Расширители

Продукция Schmersal

Продукция компании