модуль semikron, igbt, мост диодный Минск +375447584780
www.fotorele.net www.tiristor.by радиодетали, электронные компоненты
email minsk17@tut.by tel.+375 29 758 47 80 мтс

Мы не работаем с частными (физическими) лицами.
Мы работаем только с юридическими лицами(организациями) и ИП и только по безналичному расчёту.
каталог, описание, технические, характеристики, datasheet, параметры, маркировка,габариты, фото

КАТАЛОГ SEMIKRON 2017/2018 МИНСК

модуль semikron, igbt, мост диодный

купить, продажа

Mini SKiiP

SEMITOP

SEMITRANS

SEMIX

SKiM

Full SiC

Hybrid SiC

SKiiP

SEMIPACK

SEMITOP

SEMIX

SEMISTART

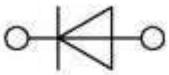

Power Bridge Rectifiers

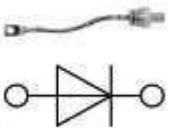

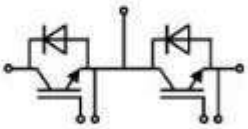

SEMISTACK Classics

SEMIPONT

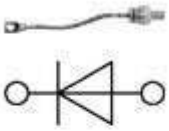

SEMITEACH

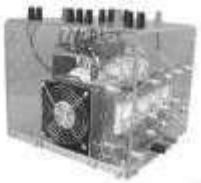

SEMIX

PT 22b3 RoHS

Pulse Transformer

Part Number: 97492890
Manufacturer: SEMIKRON
datasheet

Product Details >>

Current delivery time approx. 10 weeks

Axial fan 230V 119x38m 150m3/h

Fan

V 230 V

Part Number: 30031061
Manufacturer: SEMIKRON
datasheet

Thermal paste P12

Thermal paste

Part Number: 31867700
Manufacturer: SEMIKRON
datasheet

IGBT Modules / SEMITRANS

Cases

SEMITRANS 10

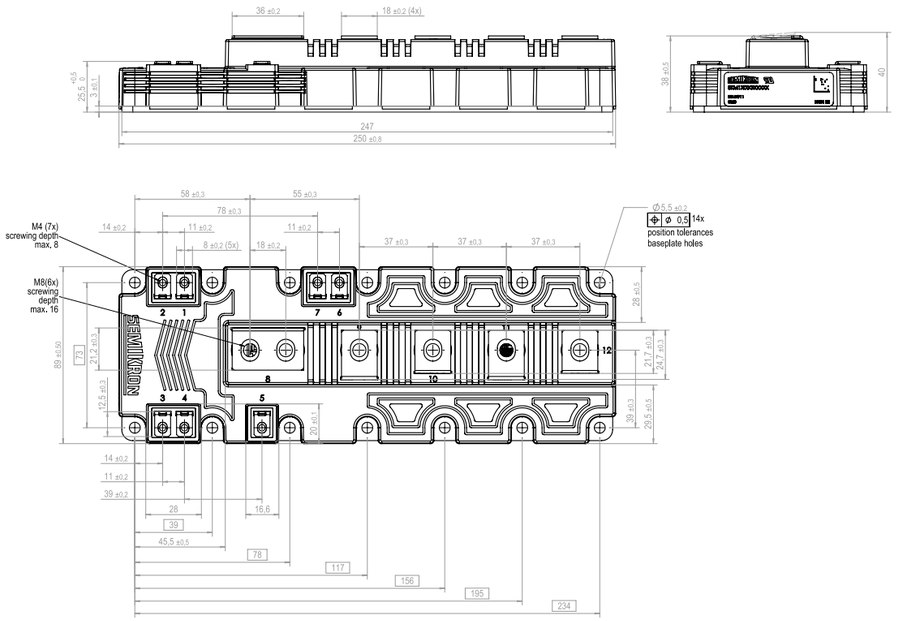

SEMITRANS 20

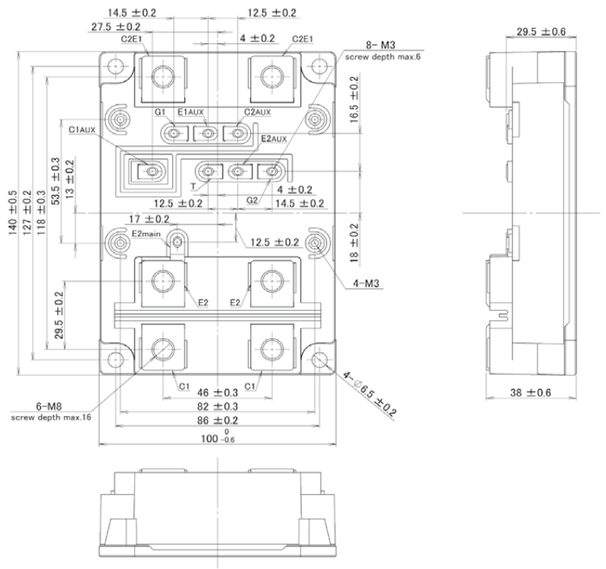

Dimensions in mm

IGBT Modules / SKiM 4/5

Type	IGBT						Diode				Module	
	I_C @ T_S = 25°C	I_{Cnom}	$V_{CE(sat)}$ @ T_j = 25°C typ.	E_{on}	E_{off}	$R_{th(j-s)}$	I_F@ T_S = 25°C	V_F @ T_j = 25°C typ.	E_{rr}	$R_{th(j-s)}$	Case	Circuit
	A	A	V	mJ	mJ	K/W	A	V	mJ	K/W		
600V - IGBT3 (Trench)												
SKiM301MLI07E4 2)	252	300	1.55	2.8	17	0.3	177	1.40	-	0.53	4	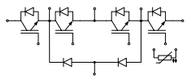
SKiM401MLI07E4 2)	314	400	1.55	3.3	21	0.25	289	1.40	1.8	0.31	4	
SKiM601MLI07E4 2)	433	600	1.55	6.1	44	0.19	318	1.39	2.4	0.31	4	
1200V - IGBT3 (Trench)												
SKiM200GD126D 3)	-	200	1.65	15	25	-	152	2.39	-	0.35	4	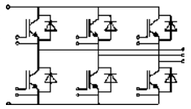
SKiM300GD126D	265	300	1.70	28	47	0.2	260	1.92	-	0.285	4	
SKiM300GD126DL 3)	265	300	1.65	28	47	0.2	260	1.92	-	0.285	4	
SKiM400GD126DM	330	300	1.70	29	46	0.134	300	1.92	-	0.19	4	
SKiM400GD126DLM	330	300	1.65	29	46	0.134	300	1.92	-	0.19	4	
SKiM450GD126D	390	450	1.70	42	70	0.13	345	1.92	-	0.19	5	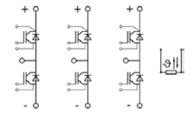
SKiM450GD126DL 3)	390	450	1.65	42	70	0.13	345	1.92	-	0.19	5	
SKiM600GD126DLM	480	450	1.65	42	70	0.09	450	1.92	-	0.125	5	
SKiM601GD126DM	480	450	1.70	42	70	0.09	450	1.92	-	0.125	5	
1200V - IGBT4 (Trench)												
SKiM301TMLI12E4B 2)	311	300	1.80	6.6	19	0.19	249	2.20	1.8	0.29	4	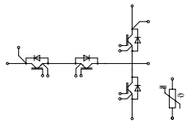
SKiM301TMLI12E4C 1)	294	300	1.80	6.6	19	0.21	274	2.20	1.8	0.25	4	
SKiM401TMLI12E4B	388	400	1.80	8.8	26	0.16	311	2.20	2.4	0.24	4	
SKiM601TMLI12E4B	529	600	1.80	11	45	0.125	495	2.14	4.4	0.15	4	
SKiM201MLI12E4 2)	206	200	1.80	15	23	0.29	187	2.20	15	0.36	4	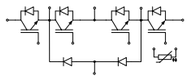
SKiM301MLI12E4	311	300	1.80	22	34	0.19	282	2.20	15	0.24	4	
SKiM304GD12T4D 3)	312	300	1.80	-	-	0.19	221	2.33	-	0.25	4	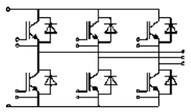
SKiM455GD12T4D1 3)	400	450	1.80	34	40	0.14	295	2.33	28	0.19	5	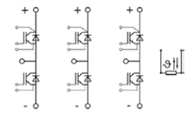
1700V - IGBT3 (Trench)												
SKiM120GD176D	110	125	2.00	72	46	0.4	105	1.6	22	0.56	4	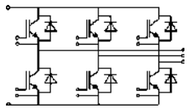
SKiM220GD176DH4	220	250	2.00	145	100	0.21	220	1.7	65	0.26	4	

Footnotes: 1) Sample status / 2) In production new / 3) Not for new designs

IGBT Modules / SKiM 4/5

Type	IGBT						Diode				Module	
	I_C @ T_S = 25°C	I_{Cnom}	$V_{CE(sat)}$ @ T_j = 25°C typ.	E_{on}	E_{off}	$R_{th(j-s)}$	I_F @ T_S = 25°C	V_F @ T_j = 25°C typ.	E_{rr}	$R_{th(j-s)}$	Case	
	A	A	V	mJ	mJ	K/W	A	V	mJ	K/W		Circuit
1700V - IGBT3 (Trench)												
SKiM270GD176D	260	300	2.00	170	120	0.175	215	1.7	-	0.29	5	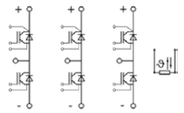

Footnotes: 1) Sample status / 2) In production new / 3) Not for new designs

Cases

SKiM 4

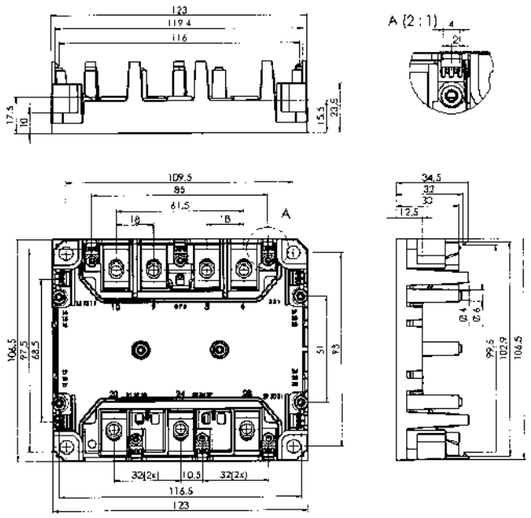

SKiM 5

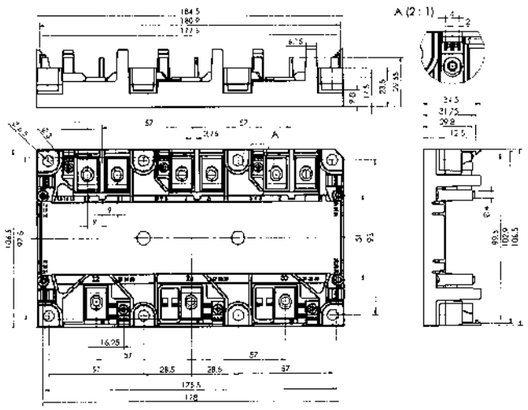

Dimensions in mm

IGBT Modules / SKiM 63/93

Type	IGBT						Diode				Module	
	I_C @ T_S = 25°C	I_{Cnom}	$V_{CE(sat)}$ @ T_j = 25°C typ.	E_{on}	E_{off}	$R_{th(j-s)}$	I_F @ T_S = 25°C	V_F @ T_j = 25°C typ.	E_{rr}	$R_{th(j-s)}$	Case	
	A	A	V	mJ	mJ	K/W	A	V	mJ	K/W		Circuit
600V - IGBT3 (Trench)												
SKiM406GD066HD[10)]	468	400	1.45	8	25	0.135	360	1.53	12	0.243	63	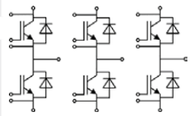
SKiM606GD066HD[10)]	640	600	1.45	16	53	0.105	462	1.52	21	0.201	63	
SKiM909GD066HD[10)]	897	900	1.45	36	88	0.078	690	1.52	29	0.135	93	
1200V - IGBT4 (Trench)												
SKiM609GAL12E4[2)]	748	600	1.85	136	83	0.068	1397	1.7	39	0.048	93	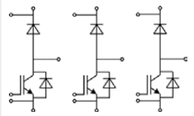
SKiM609GAR12E4[2)]	748	600	1.85	136	83	0.068	1397	1.7	39	0.048	93	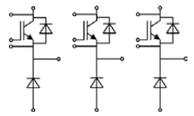
SKiM306GD12E4[10)]	410	300	1.85	19	39	0.116	305	2.14	21	0.218	63	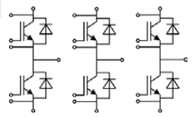
SKiM459GD12E4[10)]	554	450	1.85	22	57	0.092	438	2.14	40	0.155	93	
1700V - IGBT4 (Trench)												
SKiM429GD17E4HD[2) 10)]	608	420	1.90	245	180	0.079	411	1.66	99	0.169	93	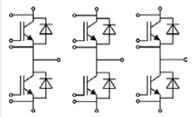

Footnotes: 2) In production new / 10) Also available with new HpTp, see Accessories/Thermal Interface Materials

IGBT Modules / SKiM 63/93

Cases

SKiM 63

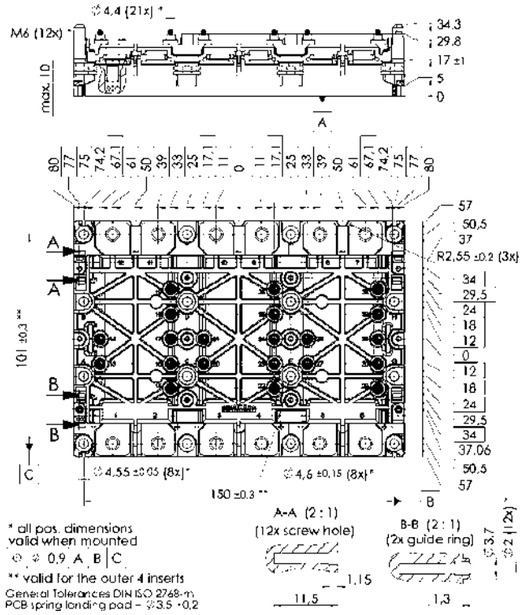

SKiM 93

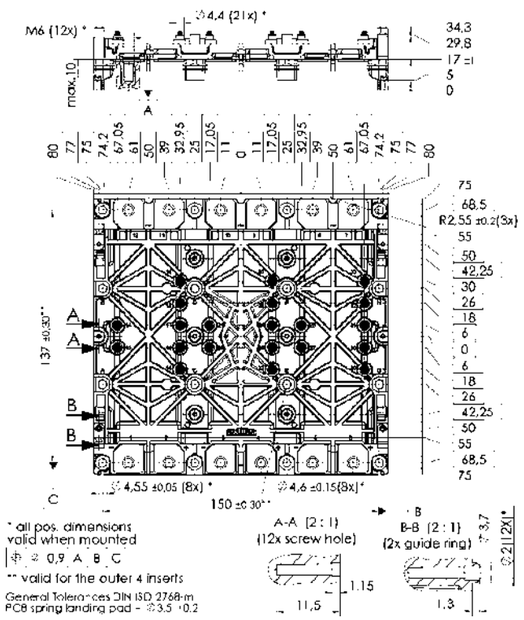

Dimensions in mm

Silicon Carbide Modules

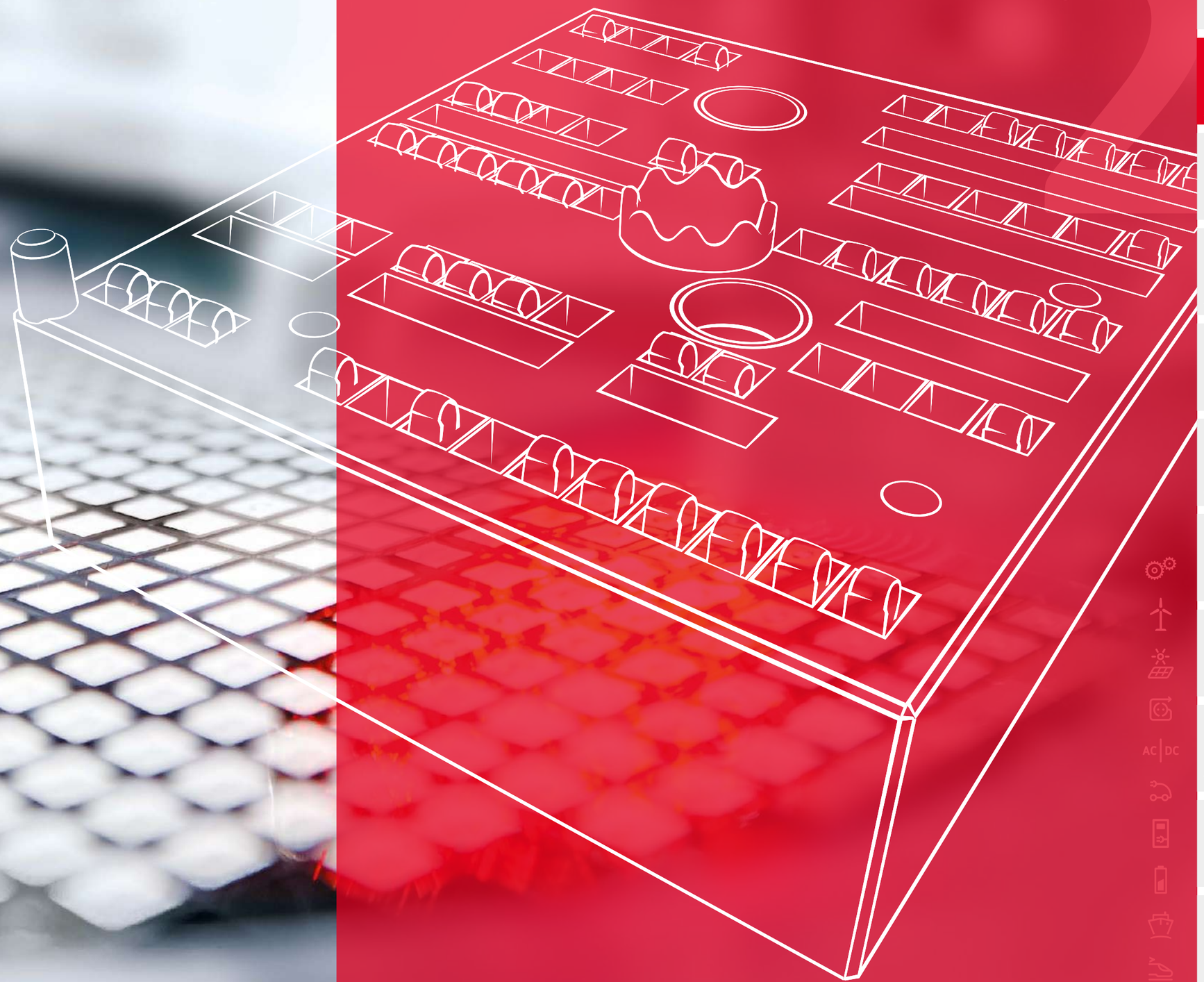

Product Classes

Silicon Carbide Modules
For Maximum Energy Efficiency

SEMIKRON offers hybrid and full silicon carbide power modules in MiniSKiiP, SEMITOP, SEMITRANS 3, SEMiX 3 Press-Fit and SKiM63/93 packages. The latest IGBT technology is combined with SiC Schottky diodes to increase the switching frequency and reduce power losses at the same time. Silicon carbide MOSFETs, either with or without anti-parallel SiC Schottky diodes, create even higher gains in switching frequency and power density.

The SEMIKRON silicon carbide power modules are available as 6-packs, including split output configurations, half-bridges, H-bridges and triple boost converters.

Other topologies such as 3-level or designs are easily adaptable to silicon carbide and round off the portfolio.

Full SiC	
MiniSKiiP	102
SEMITOP	104
SEMITRANS	106

Hybrid SiC	
MiniSKiiP	108
SEMiX Press-Fit	109
SEMITRANS	110
SKiM	111

For detailed information please refer to data sheets.

Further information
http://www.semikron.com/full-sic
http://www.semikron.com/hybrid-sic

Full SiC

MiniSKiiP®
6-pack

1200V

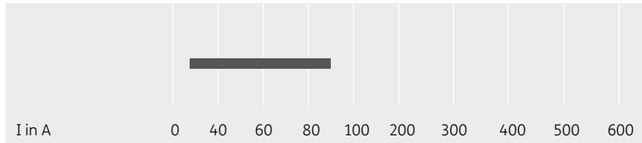

SEMITOP®
6-pack
chopper
H-bridge
half-bridge

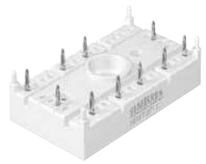

1200V

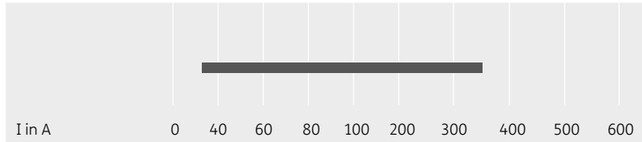

SEMITRANS®
half-bridge

1200V, 1700V

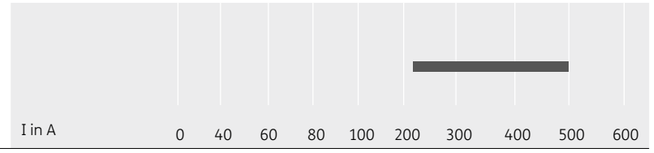

Hybrid SiC

MiniSkiiP ®
6-pack

1200V

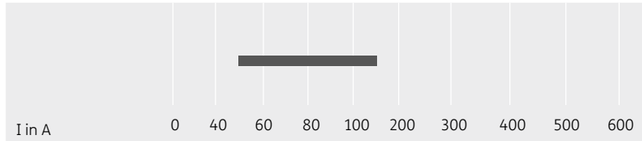

SEMiX Press-Fit®
half-bridge

1200V

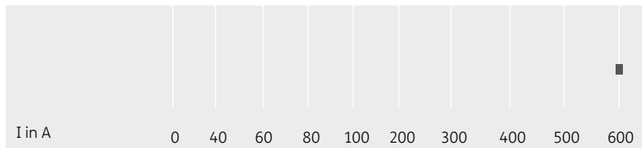

SEMITRANS®
half-bridge

1200V

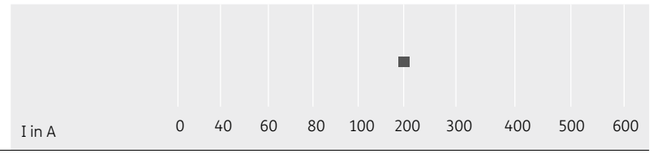

SKiM®63/93
6-pack

1200V

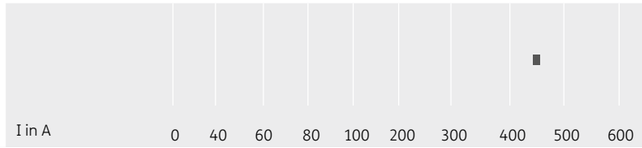

SiC Modules / Full SiC / MiniSKiiP

Type	V_{DS} V	I_D @ T_C = 25°C A	$R_{DS(on)}$ @ T_j = 25°C typ. mΩ	$R_{th(j-s)}$ K/W	Case	Circuit
1200V - SiC MOSFET						
SKiiP 13ACM12V17 [1)]	1200	25	80	1.5	II 1	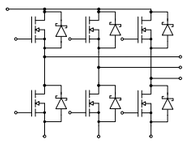
SKiiP 13ACM12V18 [1)]	1200	25	80	1.5	II 1	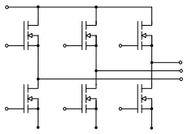
SKiiP 26ACM12V17 [1)]	1200	72	23	0.6	II 2	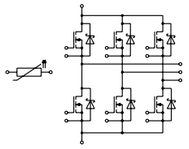

Footnotes: 1) Sample status

SiC Modules / Full SiC / MiniSKiiP

Cases

MiniSKiiP II 1

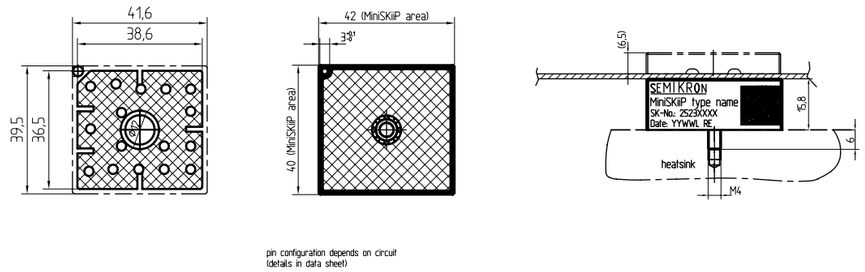

MiniSKiiP II 2

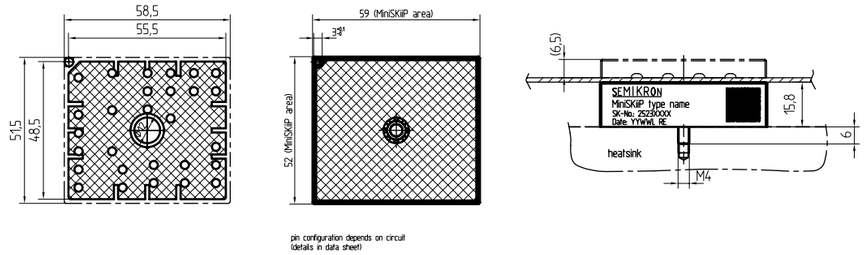

Dimensions in mm

SiC Modules / Full SiC / SEMITOP

Type	V_{DS} V	I_D @ T_C = 25°C A	$R_{DS(on)}$ @ T_j = 25°C typ. mΩ	$R_{th(j-s)}$ K/W	Case	Circuit
1200V - SiC MOSFET						
SK45MH120TSCp [1]	1200	40	45	1	2p	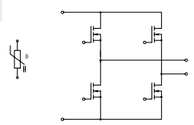
SK25MH120TSCp [1]	1200	26	80	1.4	2p	
SK45MAHT12SCp [1]	1200	40	45	1	3p	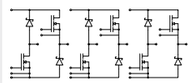
SK45MLET12SCp [1]	1200	40	45	1	3p	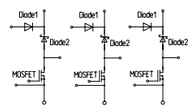
SK350MB120TSCE2 [1]	1200	400	3.7	0.13	E2	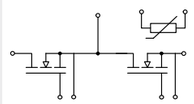

Footnotes: 1) Sample status

SiC Modules / Full SiC / SEMITOP

Cases

SEMITOP 2 Press-Fit

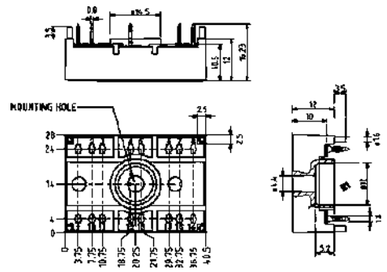

SEMITOP 3 Press-Fit

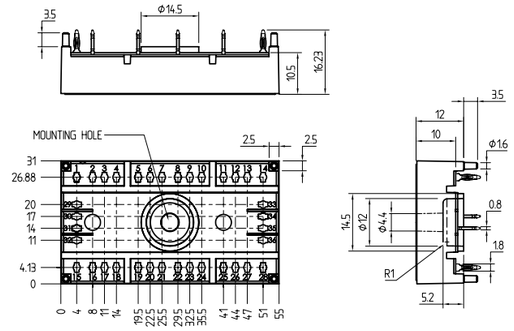

SEMITOP E2

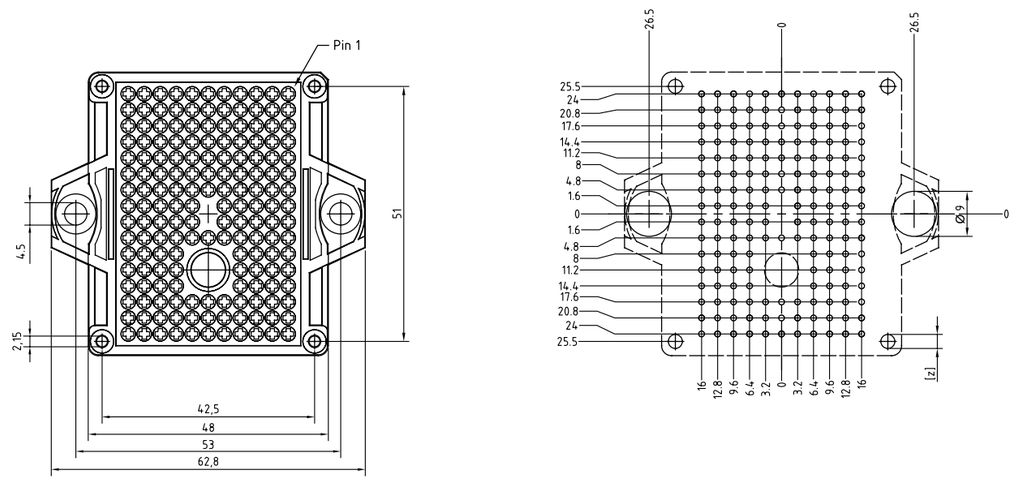

Dimensions in mm

SiC Modules / Full SiC / SEMITRANS

Type

	V_{DS} V	I_D @ T_C = 25°C A	$R_{DS(on)}$ @ T_j = 25°C typ. mΩ	$R_{th(j-c)}$ K/W	Case	Circuit
1200V - SiC MOSFET						
SKM350MB120SCH15 [1]	1200	523	5.6	0.05	3	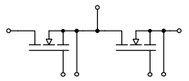
SKM500MB120SC [1]	1200	541	3.8	0.07	3	
SKM350MB120SCH17 [1]	1200	523	5.6	0.045	3	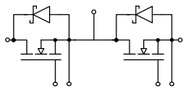
1700V - SiC MOSFET						
SKM260MB170SCH15 [1]	1700	383	8.1	0.06	3	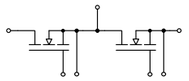
SKM260MB170SCH17 [1]	1700	383	8.1	0.06	3	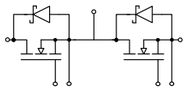
SKM230MB170SCH17 [1]	1700	327	9.5	0.07	3	

Footnotes: 1) Sample status

SiC Modules / Full SiC / SEMITRANS

Cases

SEMITRANS 3

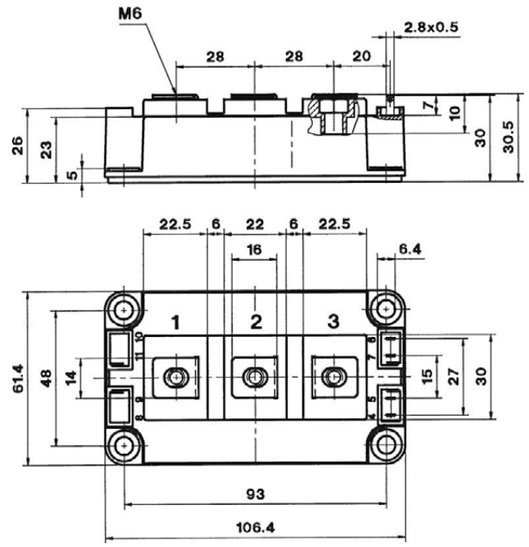

Dimensions in mm

SiC Modules / Hybrid SiC / MiniSKiiP

Type	IGBT						Diode			Module	
	I_C @ T_S = 25°C	Current (A)	$V_{CE(sat)}$ @ T_j = 25°C typ.	E_{on}	E_{off}	$R_{th(j-s)}$	I_F @ T_S = 25°C	V_F	$R_{th(j-s)}$	Case	Circuit
	A	A	V	mJ	mJ	K/W	A	V	K/W		
1200V - IGBT4 (Fast Trench)											
SKiiP25AC12F4V19[1)]	61	50	2.05	2.2	2.8	0.7	45	1.40	1.15	II 2	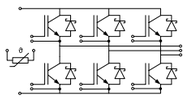
SKiiP38AC12F4V19[1)]	102	100	2.05	6.4	6.3	0.47	64	1.40	0.9	II 3	
SKiiP39AC12F4V19[1)]	144	150	2.05	9.6	9.4	0.35	118	1.40	0.44	II 3	

Footnotes: 1) Sample status

Cases

MiniSKiiP II 2

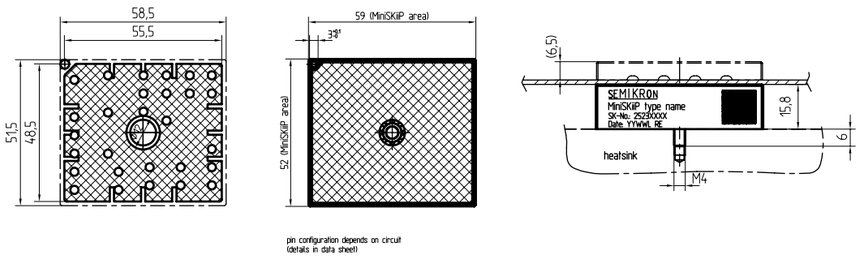

MiniSKiiP II 3

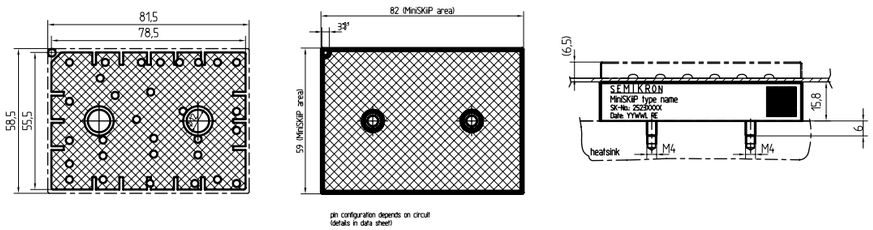

Dimensions in mm

SiC Modules / Hybrid SiC / SEMiX

Type	IGBT						Diode			Module		
	I_C @ T_C = 25°C	Current (A)	$V_{CE(sat)}$ @ T_j = 25°C typ.	E_{on}	E_{off}	$R_{th(j-c)}$	I_F @ T_C = 25°C	V_F	$R_{th(j-c)}$	Case	$R_{th(c-s)}$	Circuit
	A	A	V	mJ	mJ	K/W	A	V	K/W		K/W	
1200V - IGBT4 (Trench)												
SEMiX603GB12E4SiCp[1)]	1110	600	1.80	17	72	0.037	404	1.40	0.14	3p	0.012	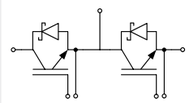

Footnotes: 1) Sample status

Cases

SEMiX 3p

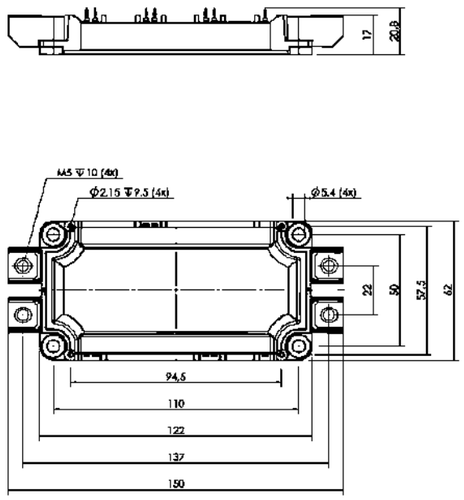

Dimensions in mm

SiC Modules / Hybrid SiC / SEMITRANS

Type	IGBT						Diode			Module		
	I_C @ T_C = 25°C	Current (A)	$V_{CE(sat)}$ @ T_j = 25°C typ.	E_{on}	E_{off}	$R_{th(j-c)}$	I_F @ T_C = 25°C	V_F	$R_{th(j-c)}$	Case	$R_{th(c-s)}$	Circuit
	A	A	V	mJ	mJ	K/W	A	V	K/W		K/W	
1200V - IGBT4 (Fast Trench)												
SKM200GB12F4SiC2 [1]	279	200	2.06	7	17	0.14	246	1.40	0.21	3	0.038	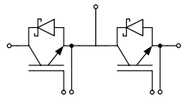
1200V - IGBT4 (Trench)												
SKM200GB12T4SiC2 [1]	313	200	1.80	7	20	0.14	246	1.40	0.21	3	0.038	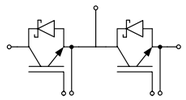

Footnotes: 1) Sample status

Cases

SEMITRANS 3

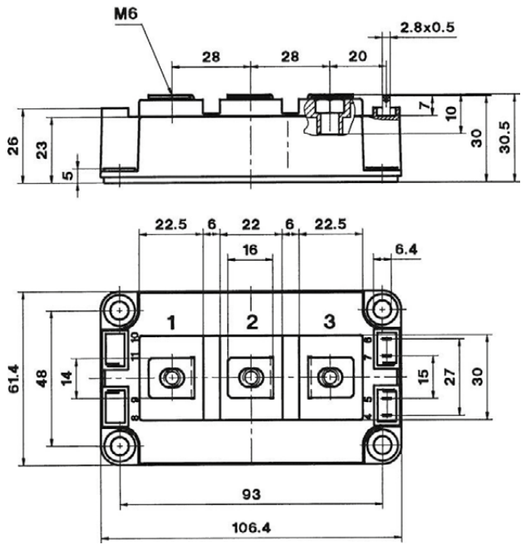

Dimensions in mm

SiC Modules / Hybrid SiC / SKiM 63/93

Type	IGBT						Diode			Module	
	I_C @ T_S = 25°C	Current (A)	$V_{CE(sat)}$ @ T_j = 25°C typ.	E_{on}	E_{off}	$R_{th(j-s)}$	I_F @ T_S = 25°C	V_F	$R_{th(j-s)}$	Case	Circuit
	A	A	V	mJ	mJ	K/W	A	V	K/W		
1200V - IGBT4 (Fast Trench)											
SKiM459GD12F4V4 [1]	496	450	2.05	9	35	0.092	388	1.40	0.155	93	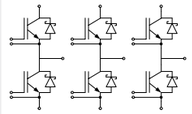

Footnotes: 1) Sample status

Cases

SKiM 93

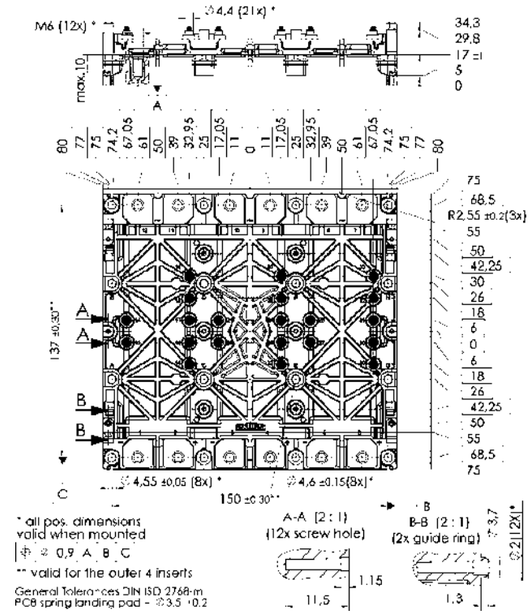

Dimensions in mm

MOSFET Modules

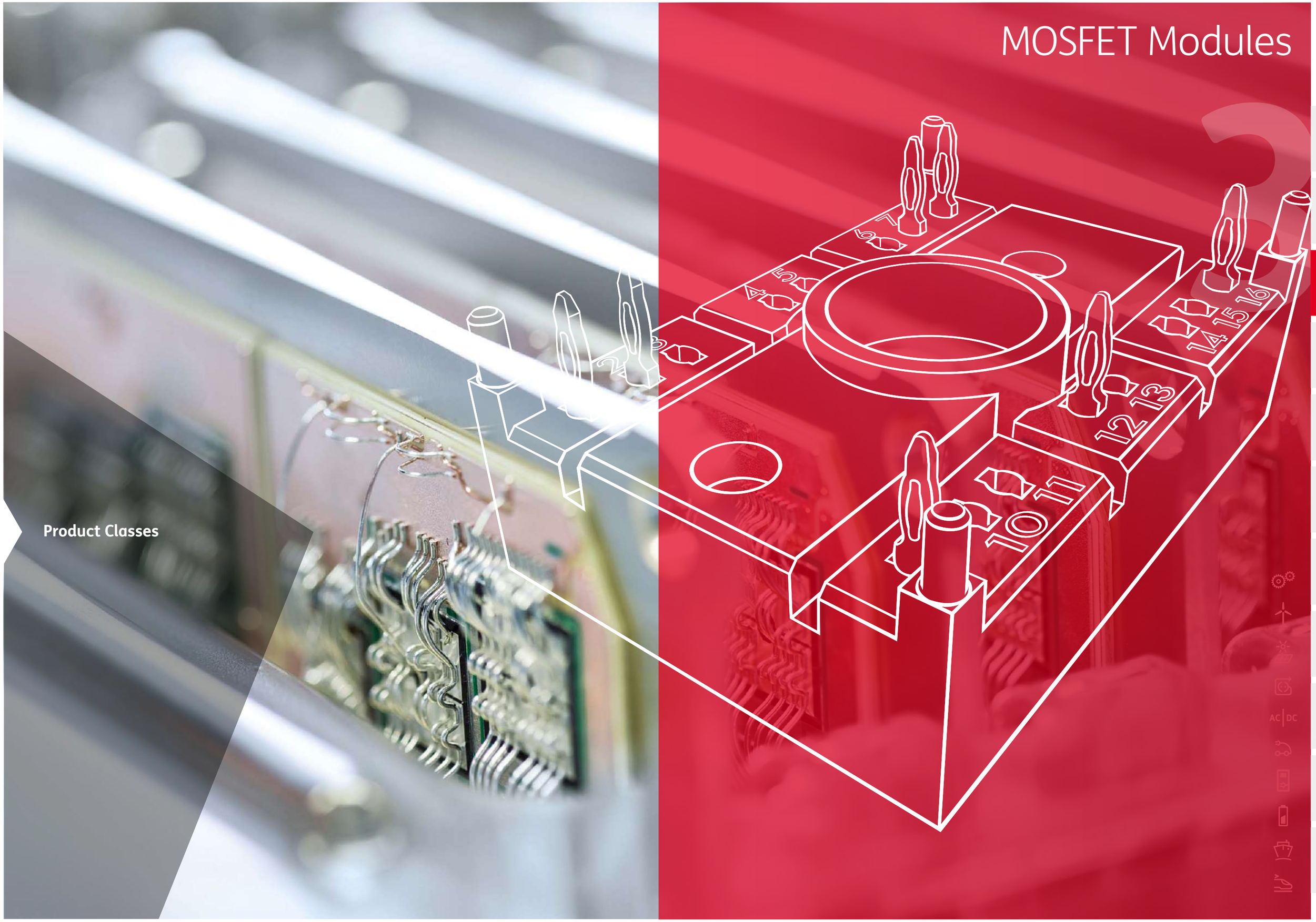

Product Classes

MOSFET Modules
Best in Class Switching Performance

SEMIKRON produces MOSFET (Metal Oxide Semiconductor Field Effect Transistor) modules in single switch, halfbridge, H-bridge and 6-pack configuration in SEMITOP and SEMITRANS packages.

The available MOSFET modules in the voltage range from 55V up to 600V and current ratings of 40A up to 290A are especially designed for high-speed switching applications and boast low switching losses.

SEMITOP	116
SEMITRANS	117

For detailed information please refer to data sheets.

Further information: http://www.semikron.com/mosfet-modules

SEMITOP®

6-pack
H-bridge
half-bridge

55V up to 600V

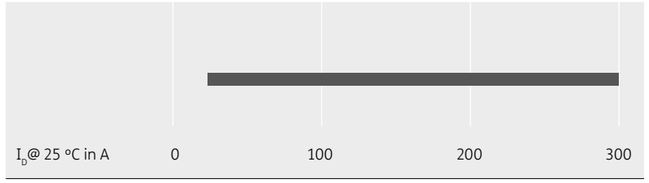

SEMITRANS®

single switch

100V up to 200V

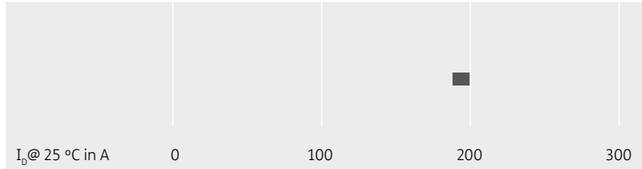

MOSFET Modules / SEMITOP

Type	V_{DS} V	I_D @ T_C = 25°C A	$R_{DS(on)}$ @ T_j = 25°C typ. mΩ	$R_{th(j-s)}$ K/W	Case	Topology Picture
100V						
SK 85 MH 10 T	100	80	-	1.1	2	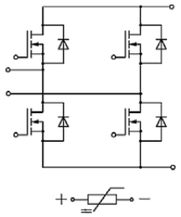

Cases

SEMITOP 2

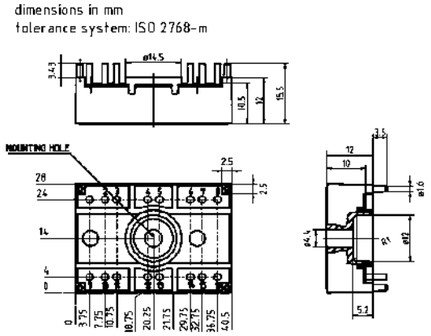

Dimensions in mm

MOSFET Modules / SEMITRANS

Type	V_{DS} V	I_D @ T_C = 25°C A	$R_{DS(on)}$ @ T_j = 25°C typ. mΩ	$R_{th(j-s)}$ K/W	Case	Circuit
100V						
SKM 111 AR	100	200	7	0.18	M1	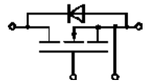
SKM 111 RZR	100	200	7	0.18	M1	
200V						
SKM 180 A020	200	180	9	0.18	M1	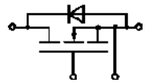

Cases

SEMITRANS M1

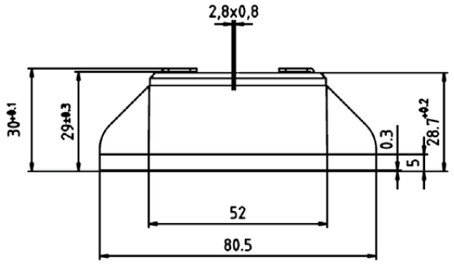

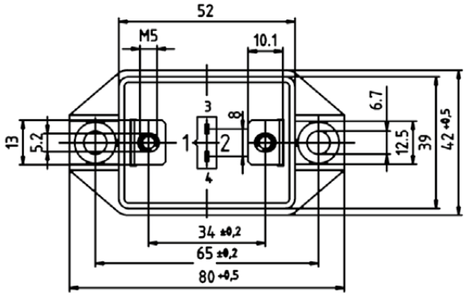

Dimensions in mm

Thyristor / Diode Modules

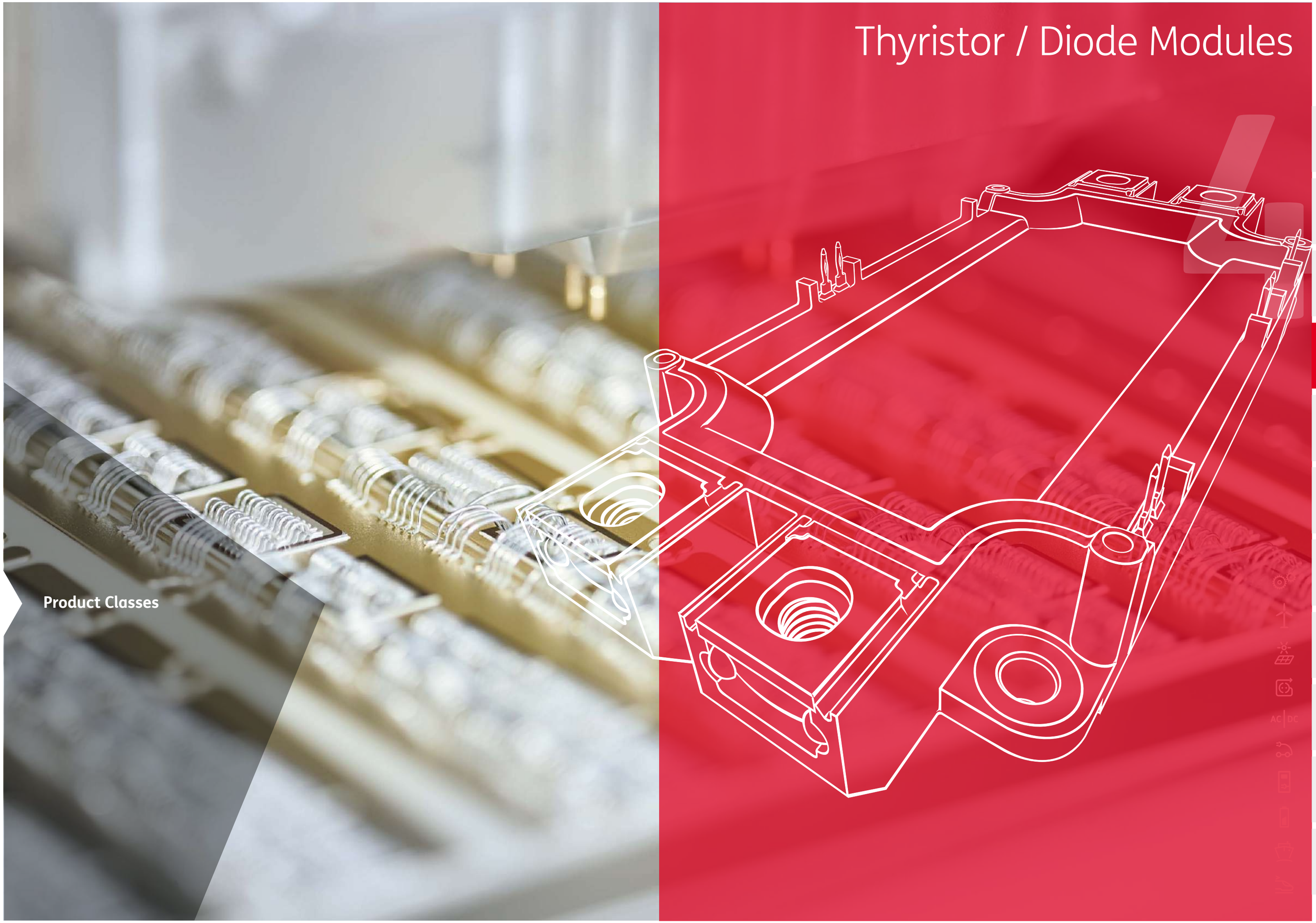

Product Classes

Thyristor / Diode Modules
With Proven Packages

The SEMIKRON thyristor/diode modules are available in different packages like SEMIPACK, SEMiSTART, SEMIPONT, SEMiX and SEMITOP. Different contact technologies – soldered contact, bonded contact or pressure contact modules – are available.

The thyristor/diode modules are offered in a variety of dual and single topologies for almost all phase control or rectifier applications.

The product class offers a product range with voltages up to 2200V. Thanks to the comprehensive product range, the optimal solution for each application can be found.

SEMITOP 1 / 2 / 3	122
SEMiX 1 / 2 / 3p	124
SEMIPONT 1 / 5	126
SEMIPACK 0 / 1 / 2 / 3 / 4 / 5 / 6	127
SEMiSTART	133

For detailed information please refer to data sheets.

Further information: www.semikron.com/thyristor-diode-modules

SEMITOP®1/2/3

W1C, WT, W3C
single switch

800V up to 1600V

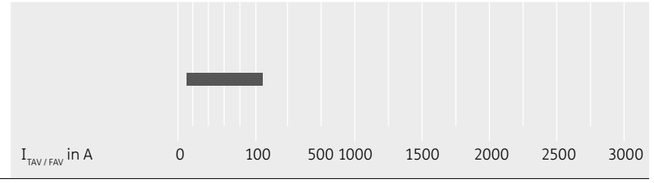

SEMiX®1/2/3p

half-bridge

1600V

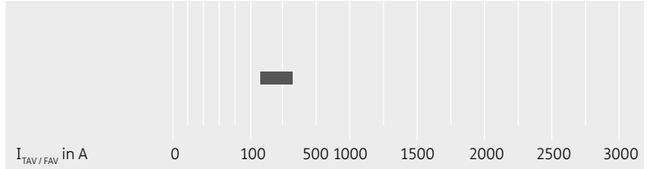

SEMIPONT®1/5

WT, W3C

800V up to 2200V

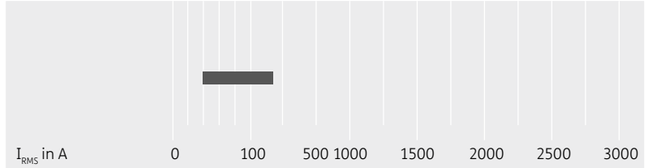

SEMIPACK®0/1/2/3/4/5/6

single switch
half-bridge

200V up to 2200V

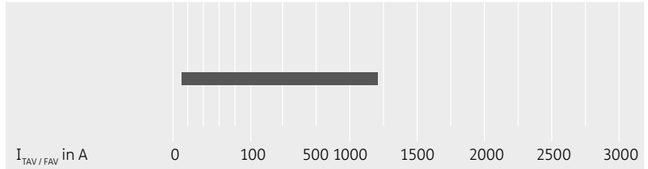

SEMiSTART®

W1C

1400V up to 1800V

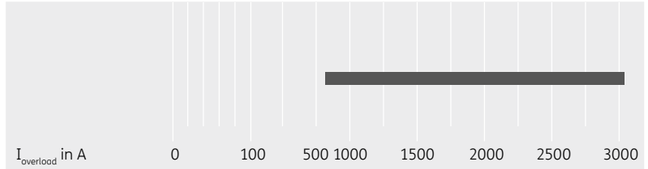

Thyristor / Diode Modules / SEMITOP

Type	V_{RRM} V_{DRM} V	I_{TAV} I_{FAV} @ T_S A	T_S °C	I_{TSM} I_{FSM} @ T_{jmax} A	$V_{T(TO)}$ @ T_{jmax} V	r_T @ T_{jmax} mΩ	$R_{th(j-s)}$ per chip K/W	T_j °C	Case	Circuit
SK 35 TAA [2)]	800-1600	35	80	380	0.85	9.10	1.2	-40 ... +130	2	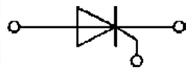
SK 55 TAA	800-1600	55	80	900	0.85	5.70	0.8	-40 ... +130	2	
SK 75 TAA [2)]	800-1600	75	80	1500	0.90	4.50	0.6	-40 ... +130	2	
SK 100 TAA [2)]	800-1600	100	80	2000	0.90	3.50	0.45	-40 ... +130	2	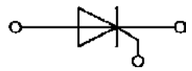
SK 75 TAE 12	1200	75	80	1250	0.85	4.40	0.6	-40 ... +130	2	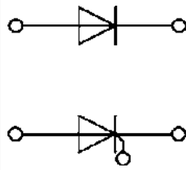
SK 25 KQ	800-1600	29	85	280	1.10	20.00	1.7	-40 ... +125	1	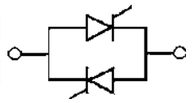
SK 45 KQ	800-1600	47	85	380	1.00	10.00	1.2	-40 ... +125	1	
SK 70 KQ	800-1600	72	85	900	1	6.00	0.8	-40 ... +125	1	
SK 100 KQ	800-1600	101	85	1350	0.90	4.50	0.6	-40 ... +125	2	
SK 120 KQ	800-1600	134	85	1800	0.90	3.50	0.45	-40 ... +125	2	
SK 25 WT	800-1600	29	85	280	1.10	20.00	1.7	-40 ... +125	2	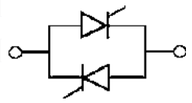
SK 45 WT	800-1600	47	85	380	1.00	10.00	1.2	-40 ... +125	2	
SK 70 WT	800-1600	72	85	900	1.00	6.00	0.8	-40 ... +125	3	
SK 100 WT	800-1600	101	85	1350	0.90	4.50	0.6	-40 ... +125	3	
										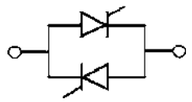
SK 35 BZ [2)]	800-1600	35	80	270	0.85	14.00	1.7	-40 ... +125	2	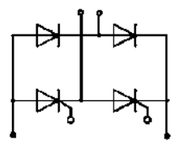
SK 45 STA	800-1600	47	75	380	1.00	10.00	1.2	-40 ... +125	3	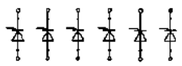
SK 25 UT	800-1600	29	85	280	1.10	20.00	1.7	-40 ... +125	3	
SK 45 UT	800-1600	47	85	380	1.00	10.00	1.2	-40 ... +125	3	
SK 30 DTA	800-1600	25	80	900	1.00	6.00	1.7	-40 ... +150	3	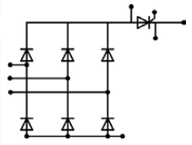
SK 60 DTA	800-1600	61	80	1350	0.90	0.60	0.6	-40 ... +125	3	
SK 80 DTA	800-1600	65	80	1800	0.90	3.50	1	-40 ... +150	3	

Footnotes: 2) In production new

Thyristor / Diode Modules / SEMITOP

Cases

SEMITOP 1

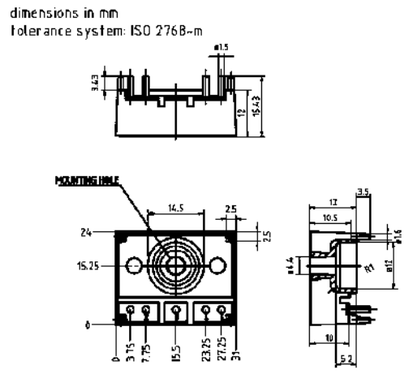

SEMITOP 2

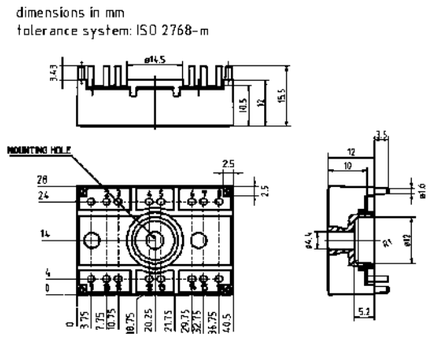

SEMITOP 3

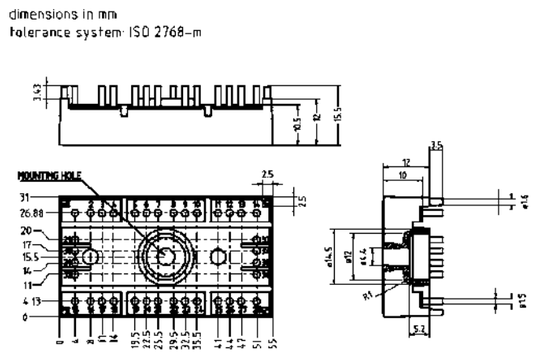

Dimensions in mm

Thyristor / Diode Modules / SEMiX

Type

	V_{RRM} V_{DRM}	I_{FAV} I_{FAV} @ T_C	T_C	I_{TSM} I_{FSM} @ T_{jmax}	$V_{T(TO)}$ @ T_{jmax}	r_T @ T_{jmax}	$R_{th(j-c)}$ per chip	$R_{th(c-s)}$	T_j	Case	Circuit
	V	A	°C	A	V	mΩ	K/W	K/W	°C		
SEMiX191KD16s	1600	190	85	5000	0.85	0.95	0.18	0.075	-40 ... +130	1s	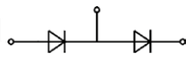
SEMiX302KD16s	1600	300	85	7500	0.85	1.1	0.091	0.045	-40 ... +130	2s	
SEMiX443KD16p[1)]	1600	467	85	6840	0.916	2.0	0.06	t.b.d.	-40 ... +175	3Ip	
SEMiX603KD16p[1)]	1600	530	85	9180	0.916	1.9	0.05	t.b.d.	-40 ... +175	3Ip	
SEMiX443KD22p[1)]	2200	436	85	8100	0.834	2.0	0.05	t.b.d.	-40 ... +150	3Ip	
SEMiX171KH16s	1600	170	85	4800	0.85	1.5	0.18	0.075	-40 ... +130	1s	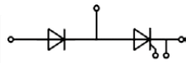
SEMiX302KH16s	1600	300	85	8000	0.85	1.1	0.091	0.045	-40 ... +130	2s	
SEMiX141KT16s	1600	140	85	3000	0.85	2.1	0.21	0.075	-40 ... +130	1s	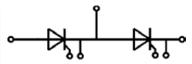
SEMiX302KT16s	1600	300	85	8000	0.85	1.7	0.091	0.045	-40 ... +130	2s	

Footnotes: 1) Sample status

Cases

SEMiX 1s

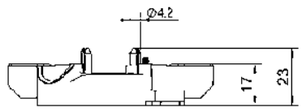

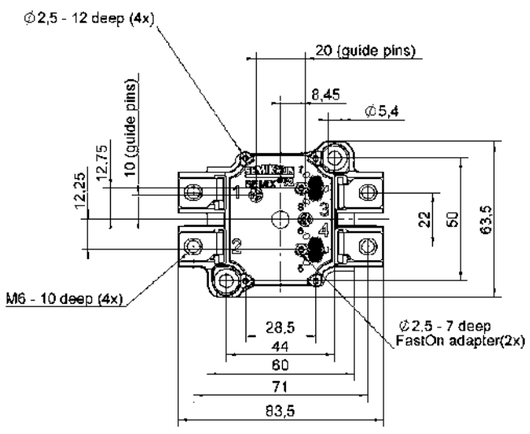

Dimensions in mm

SEMiX 2s

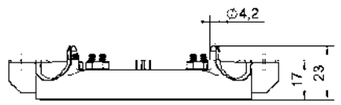

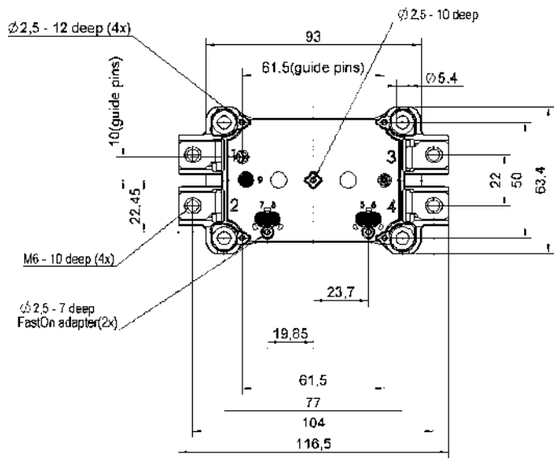

Thyristor / Diode Modules / SEMiX

Cases

SEMiX 3Ip

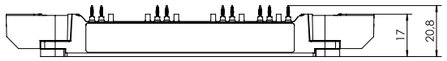

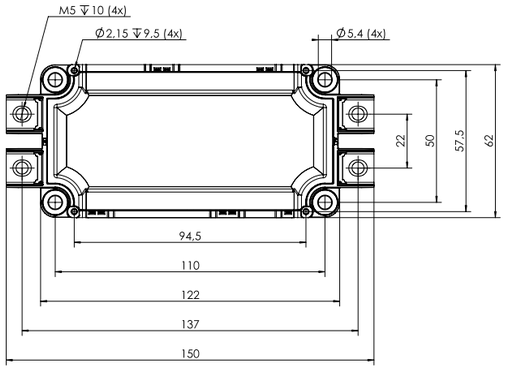

Dimensions in mm

Thyristor / Diode Modules / SEMIPONT

Type	V_{RRM} V_{DRM} V	I_{TAV} I_{FAV} @ T_S A	T_S °C	I_{TSM} I_{FSM} @ T_{jmax} A	$V_{T(TO)}$ @ T_{jmax} V	r_T @ T_{jmax} mΩ	$R_{th(j-s)}$ cont. per chip K/W	T_j °C	Case	Circuit
SKUT 85/16 T V2 [2]	1600	94	85	1050	1.10	6.0	-	-40 ... +125	5	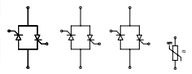
SKUT 85/12 T V2 [2]	1200	94	85	1050	1.10	6.0	-	-40 ... +125	5	
SKUT 115/16T V2 [2]	1600	127	85	1250	0.90	5	-	-40 ... +125	5	
SKUT 115/12T V2 [2]	1200	127	85	1250	0.90	5	-	-40 ... +125	5	
SKWT 40 [1]	800-2200	40	85	580	0.9	6.0	1.6	-40 ... +125	1	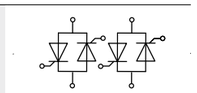
SKUT 85/12 V2 [2]	1200	85	85	1050	1.1	6.0	0.85	-40 ... +125	5	
SKUT 85/16 V2 [2]	1600	85	85	1050	1.1	6.0	0.85	-40 ... +125	5	
SKUT 115/12 V2 [2]	1200	105	85	1250	0.9	5.0	0.63	-40 ... +125	5	
SKUT 115/16 V2 [2]	1600	105	85	1250	0.9	5.0	0.63	-40 ... +125	5	

Footnotes: 1) Sample status / 2) In production new

Cases

SEMIPONT 1

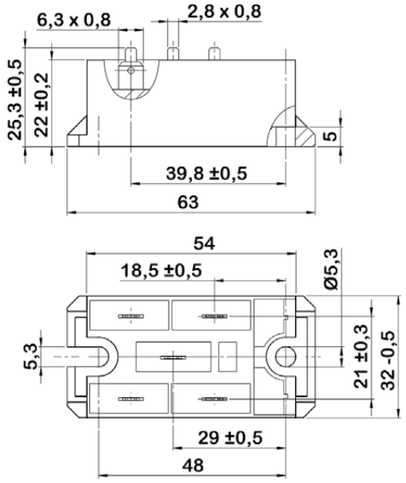

SEMIPONT 5

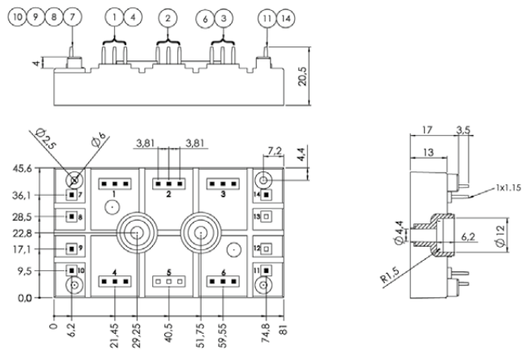

Dimensions in mm

Thyristor / Diode Modules / SEMIPACK

Type	V_{RRM} V_{DRM} V	I_{TAV} I_{FAV} @ T_C A	T_C °C	I_{TSM} I_{FSM} @ T_{jmax} A	$V_{T(TO)}$ @ T_{jmax} V	r_T @ T_{jmax} mΩ	$R_{th(j-c)}$ cont. per chip K/W	$R_{th(c-s)}$ per chip K/W	T_j °C	Case	Circuit
SKET 330	800-2200	295	85	8000	1.20	0.55	0.09	0.02	-40 ... +130	4	
SKET 400	800-1800	392	85	12000	0.92	0.3	0.09	0.02	-40 ... +130	4	
SKET 741/22 E	2200	819	85	26500	0.82	0.17	0.0405	0.015	-40 ... +125	6	
SKET 801/18 E	1800	819	85	30000	0.82	0.17	0.0405	0.015	-40 ... +125	6	
SKKE 15	600-1600	14	85	280	0.85	15	2	0.2	-40 ... +125	0	
SKKE 81	400-2200	82	85	1750	0.85	1.8	0.4	0.2	-40 ... +125	1	
SKKE 162	800-1800	195	85	5000	0.85	1.2	0.18	0.1	-40 ... +135	2	
SKKE 380	1200-1600	380	100	10000	0.80	0.35	0.11	0.04	-40 ... +150	3	
SKKE 600	1200-2200	600	100	18000	0.75	0.25	0.07	0.02	-40 ... +150	4	
SKKE 1201/22	2200	1360	85	35000	0.75	0.073	0.047	0.015	-40 ... +125	6	
SKKL 92	800-1800	95	85	1750	0.90	2	0.28	0.2	-40 ... +125	1	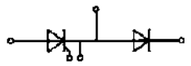
SKMT 92	800-1800	95	85	1750	0.90	2	0.28	0.2	-40 ... +125	1	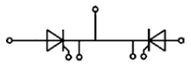
SKKD 15	600-1600	14	85	280	0.85	15	2	0.2	-40 ... +125	0	
SKKD 26	1200-1600	31	85	480	0.85	6	1	0.2	-40 ... +125	1	
SKKD 46	400-1800	47	85	600	0.85	5	0.6	0.2	-40 ... +125	1	
SKKD 81	400-1800	82	85	1750	0.85	1.8	0.4	0.2	-40 ... +125	1	
SKKD 81 H4	2000-2200	82	85	1750	0.85	1.8	0.4	0.2	-40 ... +125	1	
SKKD 100	400-1800	100	85	2000	0.85	1.3	0.18	0.2	-40 ... +125	1	
SKKD 101/16	1600	134	85	2000	0.87	2.45	0.19	0.22	-40 ... +130	1	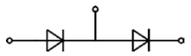
SKKD 152/16 H1	1600	171	85	4500	0.82	1.35	0.2	0.1	-40 ... +135	2	
SKKD 162	800-2200	195	85	5000	0.85	1.2	0.18	0.1	-40 ... +135	2	
SKKD 212	1200-1800	212	85	5500	0.75	1.05	0.18	0.1	-40 ... +135	2	
SKKD 260	800-2200	260	85	10000	0.9	0.37	0.14	0.04	-40 ... +130	3	
SKKD 353	1200-1800	350	85	9500	0.84	0.75	0.09	0.08	-40 ... +130	3	
SKKD 380	800-2200	380	100	10000	0.80	0.35	0.11	0.04	-40 ... +150	3	
SKKD 701	1200-2200	701	100	22500	0.70	0.28	0.069	0.02	-40 ... +160	5	
SKKH 15	600-1600	13.5	85	280	1.10	20	1.6	0.2	-40 ... +125	0	
SKKH 27	800-1800	25	85	480	0.90	12	0.9	0.2	-40 ... +125	1	
SKKH 42	800-1800	40	85	850	1.00	4.5	0.65	0.2	-40 ... +125	1	
SKKH 57	800-1800	50	85	1250	0.90	3.5	0.57	0.2	-40 ... +125	1	
SKKH 57 H4	2000-2200	50	85	1250	0.90	3.5	0.57	0.2	-40 ... +125	1	
SKKH 58/16 E	1600	55	85	1200	1.00	4.8	0.47	0.22	-40 ... +130	1	
SKKH 72	800-1800	70	85	1450	0.90	3.5	0.35	0.2	-40 ... +125	1	
SKKH 72 H4	2000-2200	70	85	1450	0.90	3.5	0.35	0.2	-40 ... +125	1	
SKKH 92	800-1800	95	85	1750	0.90	2	0.28	0.2	-40 ... +125	1	
SKKH 106	800-1800	106	85	1900	0.90	2	0.28	0.2	-40 ... +130	1	
SKKH 107/16 E	1600	119	85	1900	0.90	3.35	0.19	0.22	-40 ... +130	1	
SKKH 122	800-1800	129	85	3200	0.85	2	0.2	0.13	-40 ... +125	2	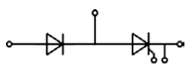
SKKH 132	800-1800	137	85	4000	1.00	1.6	0.18	0.1	-40 ... +125	2	
SKKH 132 H4	2000-2200	128	85	3800	1.10	2	0.17	0.1	-40 ... +125	2	
SKKH 162	800-1800	156	85	5000	0.85	1.5	0.17	0.1	-40 ... +125	2	
SKKH 162 H4	2000-2200	143	85	4800	0.95	2	0.16	0.1	-40 ... +125	2	
SKKH 172/16 E	1600	175	85	5000	0.83	1.3	0.155	0.1	-40 ... +125	2	
SKKH 250	1200-1800	250	85	8000	0.93	0.45	0.14	0.04	-40 ... +130	3	
SKKH 273	1200-1800	273	85	8000	0.90	0.92	0.104	0.08	-40 ... +130	3	
SKKH 280 H4	2000-2200	252	85	7500	0.90	0.75	0.11	0.04	-40 ... +125	3	
SKKH 323	1200-1800	320	85	8200	0.81	0.85	0.091	0.08	-40 ... +130	3	
SKKH 330	800-1800	305	85	8000	0.80	0.6	0.11	0.04	-40 ... +130	3	
SKKH 460	1600-2200	460	85	15500	0.88	0.45	0.072	0.02	-40 ... +130	5	
SKKH 570	1600-1800	570	85	15500	0.78	0.32	0.069	0.02	-40 ... +135	5	

Thyristor / Diode Modules / SEMIPACK

Type	V_{RRM} V_{DRM} V	I_{FAV} I_{FAV} @ T_C A	T_C °C	I_{FSM} I_{FSM} @ T_{jmax} A	$V_{T(TO)}$ @ T_{jmax} V	r_T @ T_{jmax} mΩ	$R_{th(j-c)}$ cont. per chip K/W	$R_{th(c-s)}$ per chip K/W	T_j °C	Case	Circuit
SKKT 15	600-1600	13.5	85	280	1.10	20	1.6	0.2	-40 ... +125	0	
SKKT 20	800-1600	18	85	280	1.00	16	1.2	0.2	-40 ... +125	1	
SKKT 20B	800-1600	18	85	280	1.00	16	1.2	0.2	-40 ... +125	1	
SKKT 27	800-1600	25	85	480	0.90	12	0.9	0.2	-40 ... +125	1	
SKKT 27B	800-1600	25	85	480	0.90	12	0.9	0.2	-40 ... +125	1	
SKKT 42	800-1800	40	85	850	1.00	4.5	0.65	0.2	-40 ... +125	1	
SKKT 42B	800-1800	40	85	850	1.00	4.5	0.65	0.2	-40 ... +125	1	
SKKT 57	800-1800	50	85	1250	0.90	3.5	0.57	0.2	-40 ... +125	1	
SKKT 57B	800-1800	50	85	1250	0.90	3.5	0.57	0.2	-40 ... +125	1	
SKKT 57 H4	2000-2200	50	85	1250	0.90	3.5	0.57	0.2	-40 ... +125	1	
SKKT 58/16 E	1600	55	85	1200	1.00	4.8	0.47	0.22	-40 ... +130	1	
SKKT 58B16 E	1600	55	85	1200	1.00	4.8	0.47	0.22	-40 ... +130	1	
SKKT 72	800-1800	70	85	1450	0.90	3.5	0.35	0.2	-40 ... +125	1	
SKKT 72B	800-1800	70	85	1450	0.90	3.5	0.35	0.2	-40 ... +125	1	
SKKT 72 H4	2000-2200	70	85	1450	0.90	3.5	0.35	0.2	-40 ... +125	1	
SKKT 92	800-1800	95	85	1750	0.90	2	0.28	0.2	-40 ... +125	1	
SKKT 92B	800-1800	95	85	1750	0.90	2	0.28	0.2	-40 ... +125	1	
SKKT 106	800-1800	106	85	1900	0.90	2	0.28	0.2	-40 ... +130	1	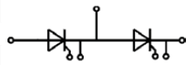
SKKT 106B	800-1800	106	85	1900	0.90	2	0.28	0.2	-40 ... +130	1	
SKKT 107/16 E	1600	119	85	1900	0.90	3.35	0.19	0.22	-40 ... +130	1	
SKKT 107B16 E	1600	119	85	1900	0.90	3.35	0.19	0.22	-40 ... +130	1	
SKKT 122	800-1800	129	85	3200	0.85	2	0.2	0.13	-40 ... +125	2	
SKKT 132	800-1800	137	85	4000	1.00	1.6	0.18	0.1	-40 ... +125	2	
SKKT 132 H4	2000-2200	128	85	3800	1.10	2	0.17	0.1	-40 ... +125	2	
SKKT 162	800-1800	156	85	5000	0.85	1.5	0.17	0.1	-40 ... +125	2	
SKKT 162 H4	2000-2200	143	85	4800	0.95	2	0.16	0.1	-40 ... +125	2	
SKKT 172	1400-1800	175	85	5000	0.83	1.3	0.155	0.1	-40 ... +125	2	
SKKT 250	800-1800	250	85	8000	0.93	0.45	0.14	0.04	-40 ... +130	3	
SKKT 273	1200-1800	273	85	8000	0.90	0.92	0.104	0.08	-40 ... +130	3	
SKKT 280 H4	2000-2200	252	85	7500	0.90	0.75	0.11	0.04	-40 ... +125	3	
SKKT 323	1200-1800	320	85	8200	0.81	0.85	0.091	0.08	-40 ... +130	3	
SKKT 330	800-1800	305	85	8000	0.80	0.6	0.11	0.04	-40 ... +130	3	
SKKT 460/16 E	1600	460	85	15500	0.88	0.45	0.072	0.02	-40 ... +130	5	
SKKT 460/22 E H4	2200	460	85	15500	0.88	0.45	0.072	0.02	-40 ... +130	5	
SKKT 570	1200-1800	570	85	15500	0.78	0.32	0.069	0.02	-40 ... +135	5	

Thyristor / Diode Modules / SEMIPACK

Cases

SEMIPACK 0

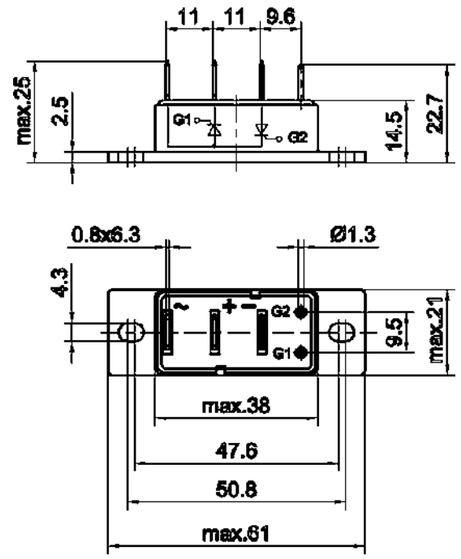

SEMIPACK 1

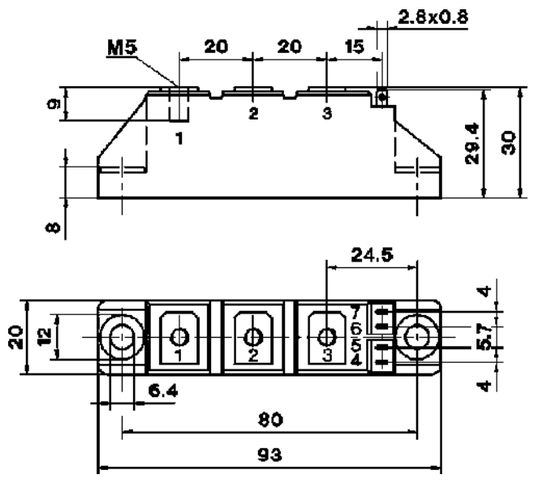

SEMIPACK 2

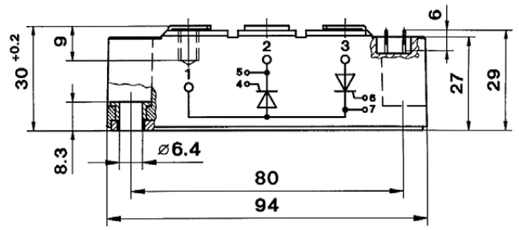

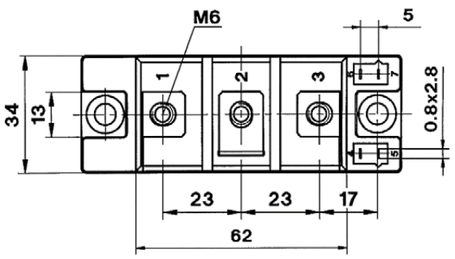

SEMIPACK 3

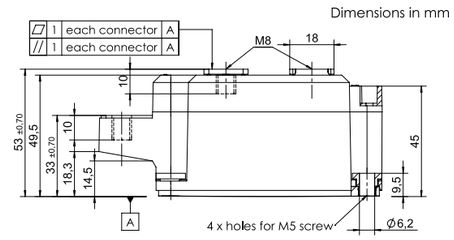

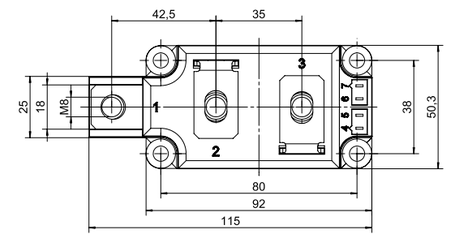

General tolerance ± 0,5 mm

Dimensions in mm

Thyristor / Diode Modules / SEMIPACK

Cases

SEMIPACK 4

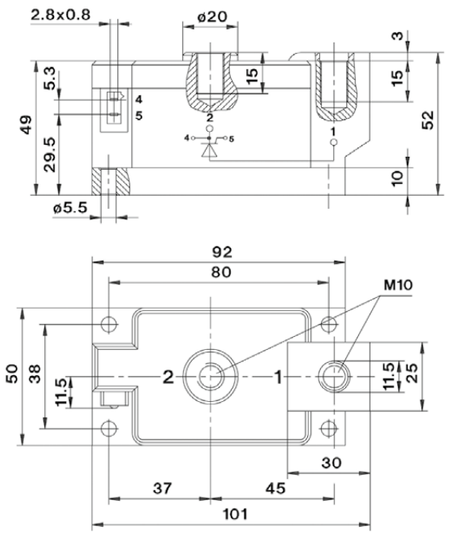

SEMIPACK 5

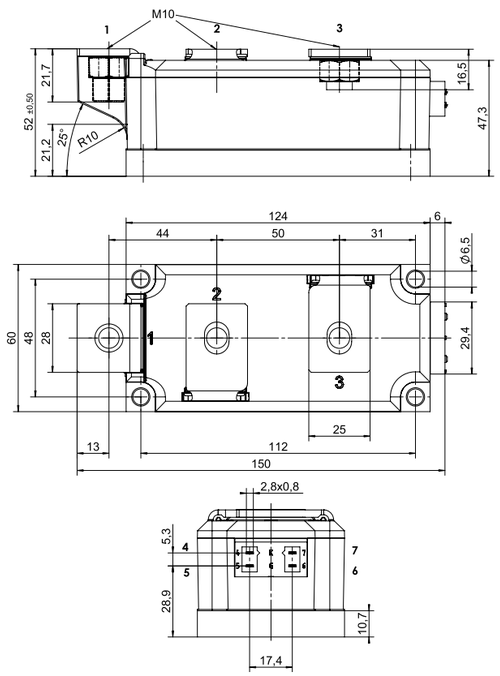

SEMIPACK 6

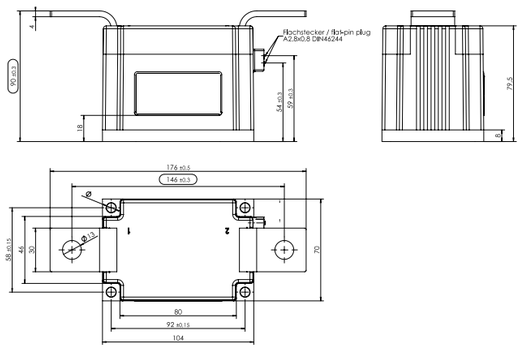

Dimensions in mm

Thyristor / Diode Modules / SEMIPACK FAST

Type

	V_{RRM} V_{DRM}	I_{TAV} I_{FAV} @ T_C	T_C	I_{FSM} @ T_{jmax}	$V_{T(TO)}$ @ T_{jmax}	r_T @ T_{jmax}	$R_{th(j-c)}$ per chip	$R_{th(c-s)}$	T_j	Case	Circuit
	V	A	°C	A	V	mΩ	K/W	K/W	°C		
SKKE 120F	1700	120	82	1800	1.5	4.5	0.2	0.05	-40 ... +150	2	
SKKE 290F06	600	290	109	6000	0.9	1.2	0.08	0.05	-40 ... +150	2	
SKKE 301F12	1200	300	43	3600	1.2	2.75	0.11	0.05	-40 ... +150	2	
SKKE 310F12	1200	310	84	5500	1.2	1.9	0.08	0.05	-40 ... +150	2	
SKKE 330F17[5]	1700	330	70	5200	1.5	1.9	0.079	0.038	-40 ... +150	4	
SKKE 600F12[5]	1200	600	85	5800	1.2	1.9	0.062	-	-40 ... +150	4	
SKKD 40F	600-1000	40	80	940	1.2	4	0.7	0.2	-40 ... +125	1	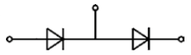
SKKD 42F	1200-1400	42	85	1100	1	5	0.7	0.2	-40 ... +130	1	
SKKD 60F	1700	60	83	900	1.5	9	0.4	0.1	-40 ... +150	2	
SKKD 75F12	1200	75	55	900	1.2	11	0.4	0.1	-40 ... +150	2	
SKKD 150F12	1200	150	54	1800	1.2	5.5	0.2	0.1	-40 ... +150	2	
SKKD 170F	1200	170	85	2300	1.2	3.5	0.14	0.1	-40 ... +150	2	
SKKD 205F	600	205	87	3000	0.9	2	0.16	0.1	-40 ... +150	2	
SKMD 150F12	1200	150	54	1800	1.2	5.5	0.2	0.1	-40 ... +150	2	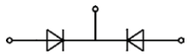
SKND 150F	1200	150	54	1800	1.2	5.5	0.2	0.1	-40 ... +150	2	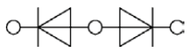
SKND 205F	600	205	87	3000	0.9	2	0.16	0.1	-40 ... +150	2	

Footnotes: 5) SEMIPACK Fast in SEMITRANS 4 case

Cases

SEMIPACK 1

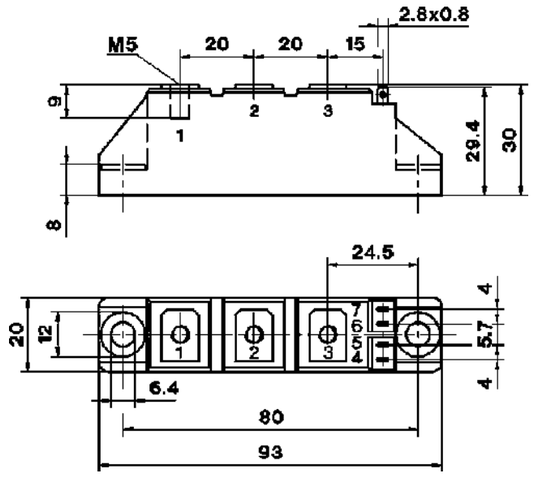

SEMIPACK 2

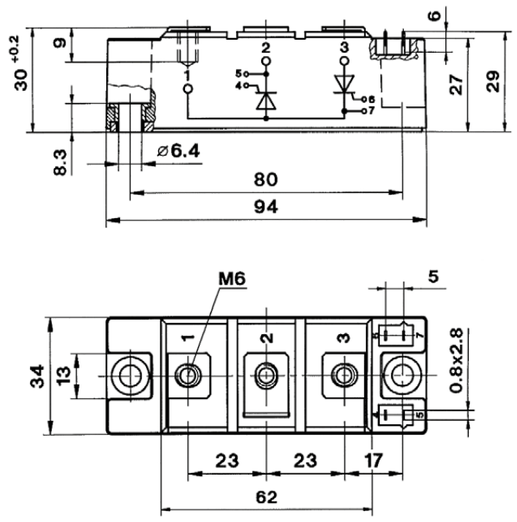

Dimensions in mm

Thyristor / Diode Modules / SEMIPACK FAST

Cases

SEMIPACK Fast in SEMITRANS 4

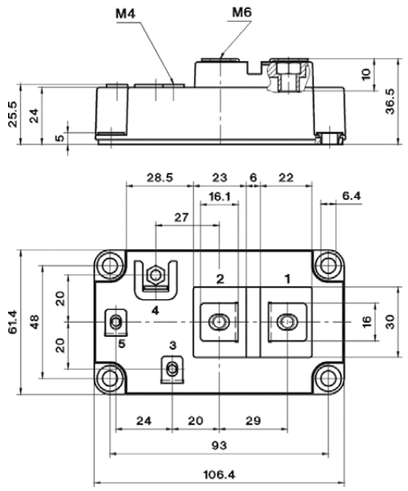

Dimensions in mm

Thyristor Modules / SEMiSTART

Type

	V_{RRM} V_{DRM}	$I_{overload}$ W1C (for 20s)	T_c	I_{TSM} @ T_j = 125°C	$V_{T(TO)}$ @ T_{jmax} =125°C	r_T @ T_{jmax} =125°C	$R_{th(j-r)}$ cont. per chip	T_{jmax} (for 20s)	Case	Circuit
	V	A	°C	A	V	mΩ	K/W	°C		
SKKQ 560	1400-1800	560	150	5200	0.9	0.9	0.106	150	1	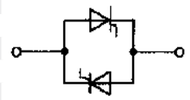
SKKQ 800	1400-1800	800	150	5200	0.9	0.8	0.106	150	2	
SKKQ 1200	1400-1800	1225	150	8000	0.9	0.5	0.066	150	2	
SKKQ 1500	1400-1800	1500	150	15000	0.85	0.3	0.037	150	2	
SKKQ 3000	1400-1800	3080	150	25500	0.95	0.18	0.026	150	3	

Cases

SEMiSTART 1

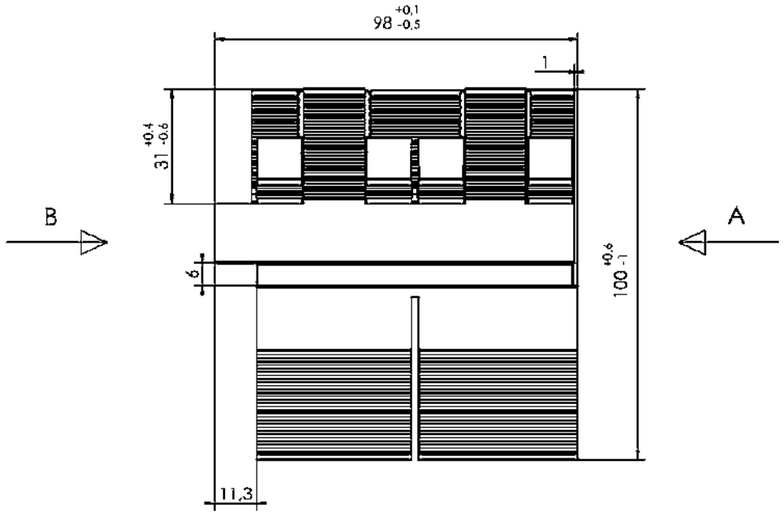

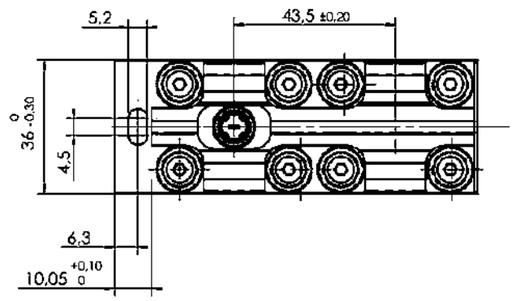

Dimensions in mm

Thyristor Modules / SEMiSTART

Cases

SEMiSTART 2

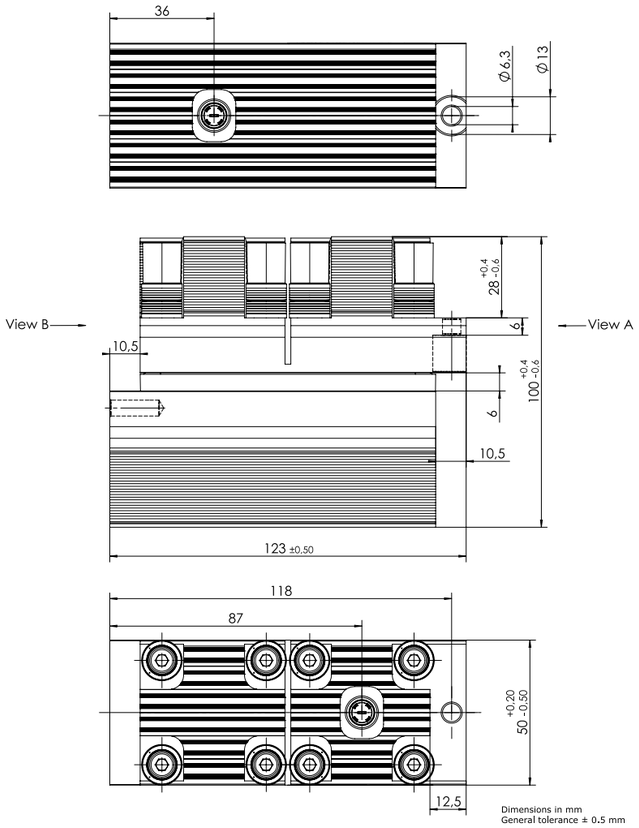

Dimensions in mm

Thyristor Modules / SEMiSTART

Cases

SEMiSTART 3

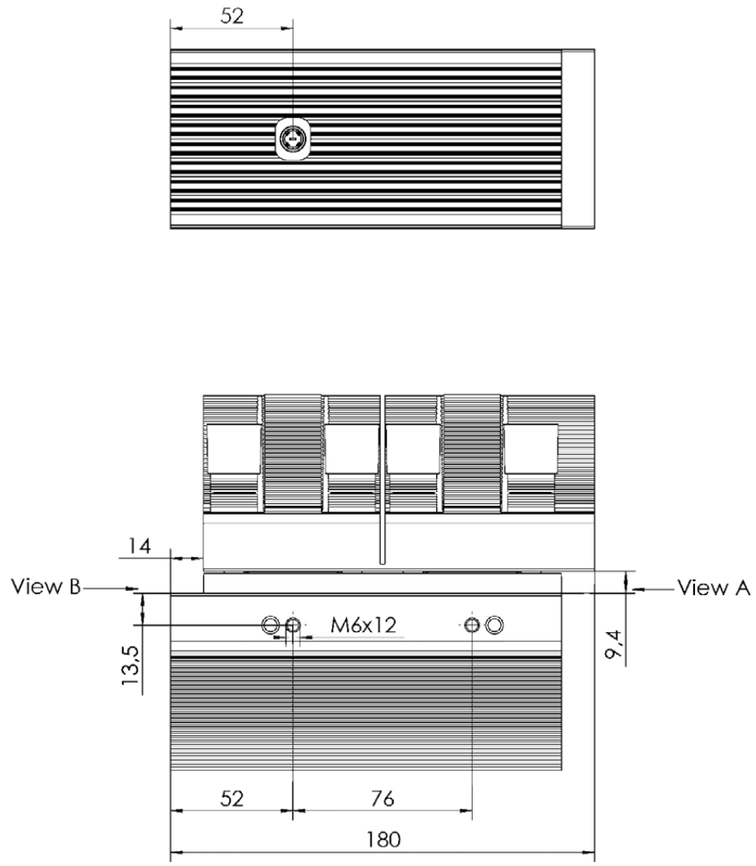

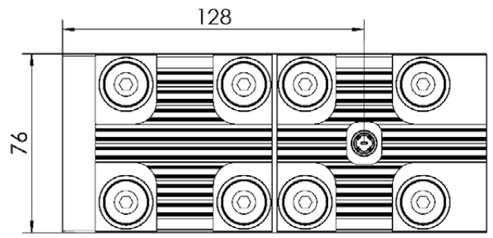

Dimensions in mm

Bridge Rectifier Modules

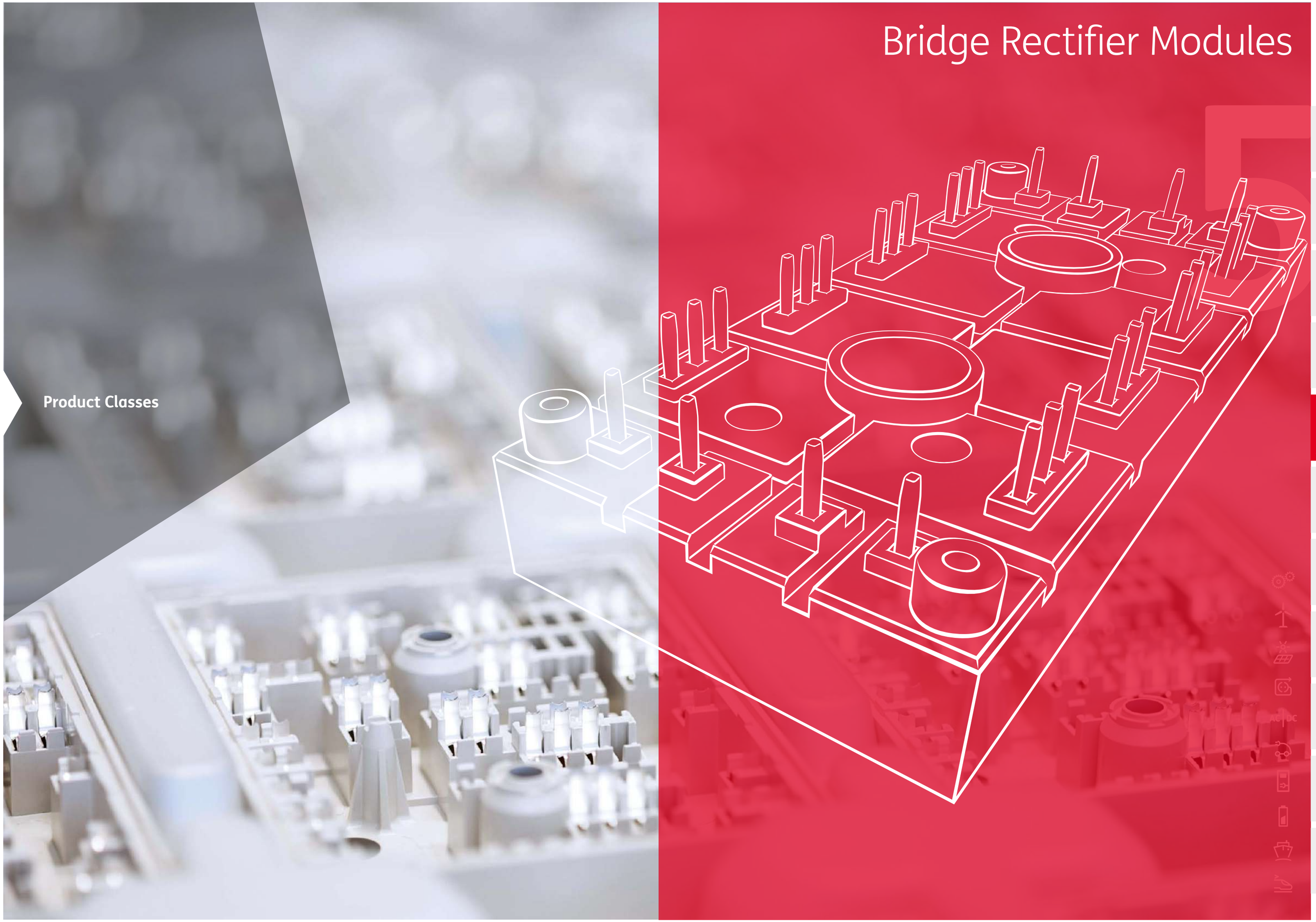

Product Classes

Bridge Rectifier Modules
For Reliable Inverter Designs

Bridge rectifiers include every branch of a rectifier circuit in a single, compact case. Bridge rectifiers exist from a few amps to several hundred amps in different package types.

SEMIKRON offers bridge rectifier modules in single phase or 3-phase topology with or without brake chopper. The bridge rectifier modules are available in different packages such as SEMiX, SEMITOP, SEMIPONT, Power Bridge and MiniSKiiP.

MiniSKiiP	140
SEMITOP	142
SEMIPONT	144
SEMiX	148
Power Bridge	150

For detailed information please refer to data sheets.

Further information: www.semikron.com/bridge-rectifier-modules

SEMITOP®/SEMIPONT®/MiniSKiiP®

Rectifier with brake chopper

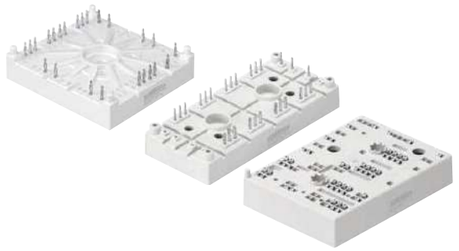

600V up to 1800V

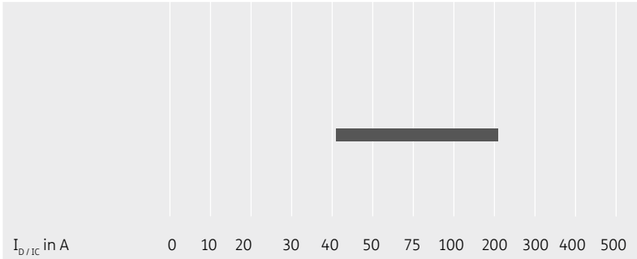

SEMITOP®/SEMIPONT®/SEMiX®/ Power Bridge

three phase

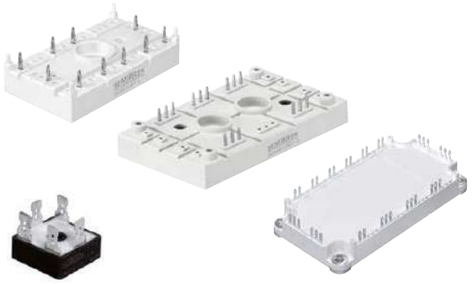

400V up to 2200V

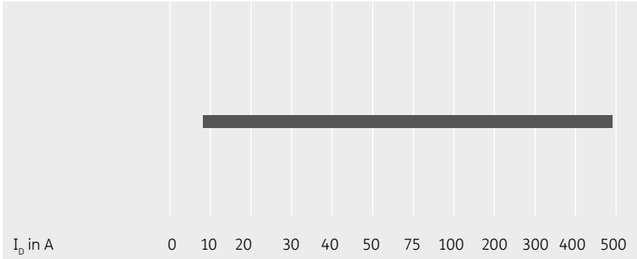

SEMIPONT®/SEMITOP®/ Power Bridge

single phase

400V up to 2200V

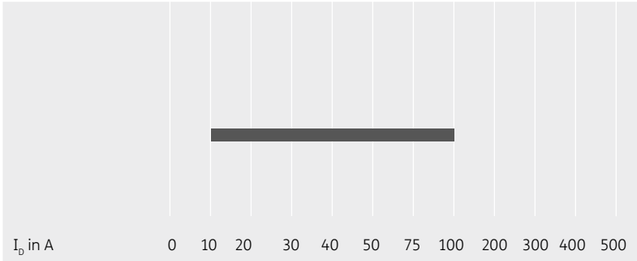

Bridge Rectifier Modules / MiniSKiiP

Type	V_{RRM} V_{DRM} V	I_F@T_S A	T_S °C	$I_{FSM/TSM}$@T_S=25°C A	$V_{F(TO)}$ V	r_F@T_{jmax} mΩ	$R_{th(j-s)}$ K/W	T_j °C	Case	Circuit
1200V - IGBT3 (Trench)										
SKiiP 39AN16V1 1)	1600	180	70	3200	0.83	1.8	0.4	-40 ... +150	II 3	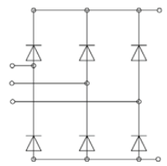
SKiiP 39AH16V1 1)	1600	112	70	2900	0.85	2.4	0.4	-40 ... +130	II 3	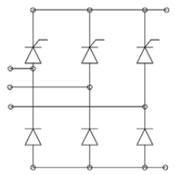
SKiiP 28ANB16V1	1600	83	70	1000	0.8	7	0.7	-40 ... +150	II 2	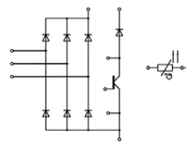
SKiiP 28ANB16V2	1600	83	70	1000	0.8	7	0.7	-40 ... +150	II 2	
SKiiP 39ANB16V1	1600	124	70	1600	0.8	4	0.5	-40 ... +150	II 3	
SKiiP 28ANB16V10	1600	83	70	1000	0.8	7	0.7	-40 ... +150	II 2	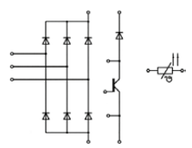
SKiiP 28AHB16V1	1600	82	70	1000	0.85	7	0.7	-40 ... +125	II 2	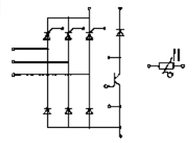
SKiiP 39AHB16V1	1600	121	70	1250	0.85	4	0.5	-40 ... +125	II 3	
1700V - IGBT3 (Trench)										
SKiiP 28ANB18V3 2)	1800	98	70	1000	0.965	3.4	0.64	-40 ... +150	II 2	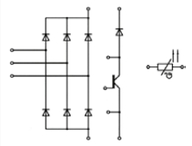

Footnotes: 1) Sample status / 2) In production new

Bridge Rectifier Modules / MiniSKiiP

Cases

MiniSKiiP II 2

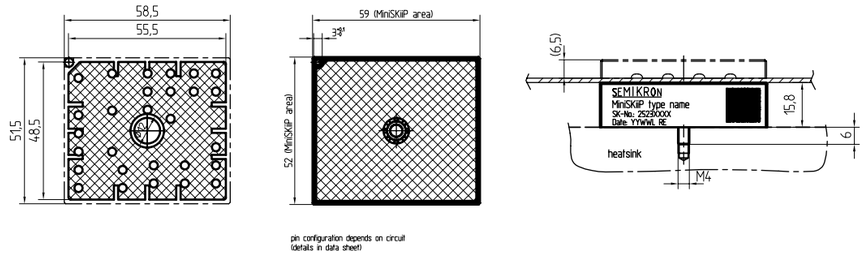

MiniSKiiP II 3

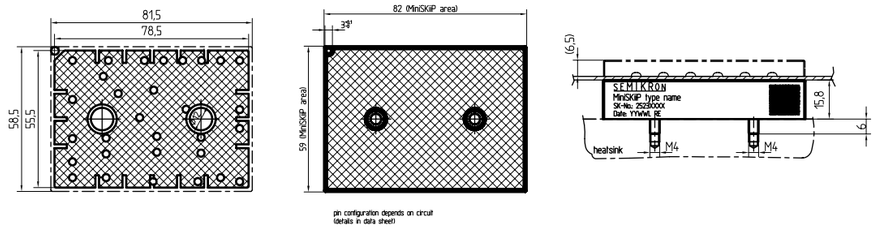

Dimensions in mm

Bridge Rectifier Modules / SEMITOP

Type	V_{RRM} V_{DRM} V	I_D @ T_S A	T_S °C	I_{TSM} I_{FSM}@T_{jmax} A	$V_{T(TO)}$@T_{jmax} V	r_T@T_{jmax} mΩ	$R_{th(j-s)}$ per chip K/W	T_j °C	Case	Circuit
1 and 3 phase										
SK 50 B 06 UF [2]	600	46	80	400	0.80	11.00	0.45	-40 ... +150	2	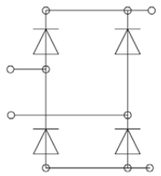
SK 50 B	800-1600	51	80	270	0.8	13.00	1.7	-40 ... +150	2	
SK 55 B 06 F	600	54	80	440	0.9	16.00	1.2	-40 ... +150	2	
SK 55 B 12 F	1200	57	80	550	1.20	22.00	0.9	-40 ... +150	2	
SK 70 B	800-1600	68	80	560	0.8	11.00	1.2	-40 ... +150	2	
SK 100 B [2]	800-1600	100	80	890	0.83	3.90	1	-40 ... +150	2	
SK 40 DT	800-1600	42	80	280	1.1	20.00	1.7	-40 ... +125	3	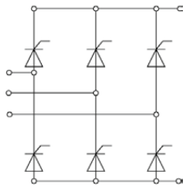
SK 70 DT	800-1600	68	80	380	1	10.00	1.2	-40 ... +125	3	
SK 55 D	800-1600	55	80	200	0.8	13.00	2.15	-40 ... +150	2	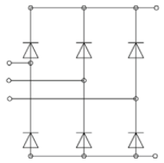
SK 70 D	800-1600	70	80	270	0.8	13.00	1.7	-40 ... +150	2	
SK 80 D 12F	1200	80	80	550	1.2	22.00	0.9	-40 ... +150	3	
SK 95 D	800-1600	95	80	560	0.8	11.00	1.2	-40 ... +150	2	
SK 95 D 16p [2]	1600	95	80	560	0.8	11.00	1.2	-40 ... +150	2p	
SK 40 DH	800-1600	42	80	270	1.1	20.00	1.7	-40 ... +150	3	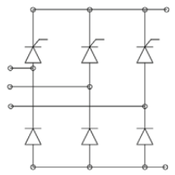
SK 70 DH	800-1600	68	80	270	1	10.00	1.2	-40 ... +125	3	
SK 55 DGL 126	1200	55	80	370	0.80	13.00	2	-40 ... +150	3	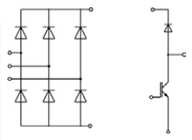
SK 95 DGL 126 [2]	1600	96	80	700	0.8	11.00	1.2	-40 ... +150	3	
SK 170 DHL 126 [1]	1200	170	70	1000	0.8	7.00	0.51	-40 ... +150	4	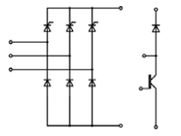
SK 200 DHL 066 [1]	600	210	70	1250	0.8	4.00	0.52	-40 ... +150	4	

Footnotes: 1) Sample status / 2) In production new

Bridge Rectifier Modules / SEMITOP

Cases

SEMITOP 2

dimensions in mm
tolerance system: ISO 2768-m

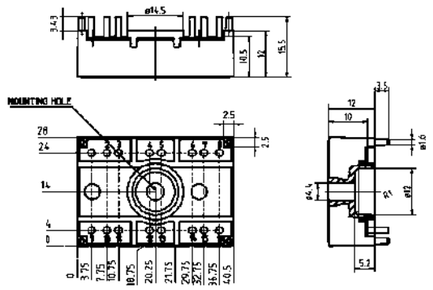

SEMITOP 2 Press-Fit

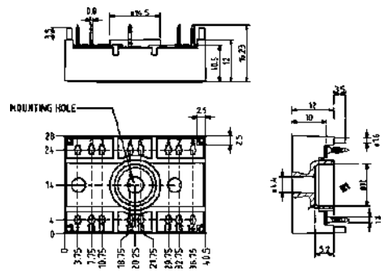

SEMITOP 3

dimensions in mm
tolerance system: ISO 2768-m

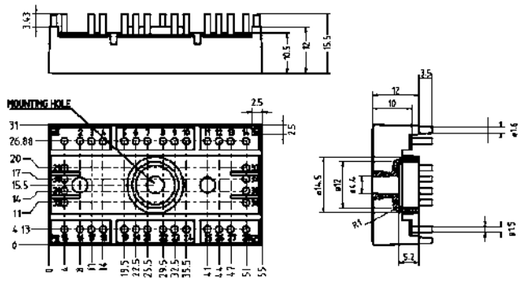

SEMITOP 4

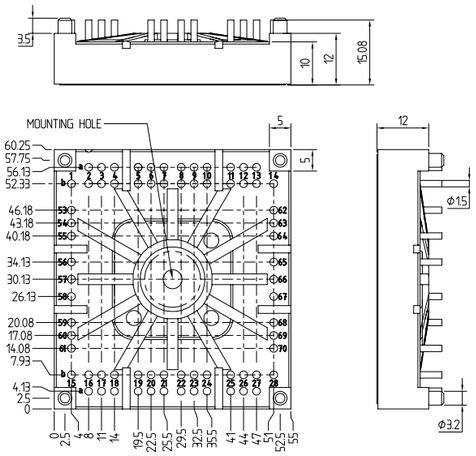

Dimensions in mm

Bridge Rectifier Modules / SEMIPONT

Type	V_{RRM} V_{DRM} V	I_D @ T_C A	T_C °C	I_{TSM} I_{FSM}@T_{jmax} A	$V_{T(TO)}$@T_{jmax} V	r_T@T_{jmax} mΩ	$R_{th(j-c)}$ cont. per chip K/W	T_j °C	Case	Circuit
1 and 3 phase										
SKB 28	200-1600	28	87	370	0.85	12.0	2	-40 ... +125	1	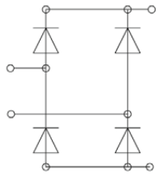
SKB 52	400-1800	50	99	425	0.85	8.0	1.5	-40 ... +150	3	
SKB 60	400-1600	60	88	850	0.85	5.0	1	-40 ... +125	2	
SKB 72	400-1800	70	101	640	0.85	5.0	1.1	-40 ... +150	3	
SKBH 28	600-1400	28	89	280	1	16.0	1.8	-40 ... +125	1	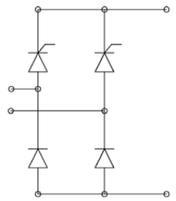
SKBZ 28	400-1400	28	89	280	1	16.0	2.2	-40 ... +125	1	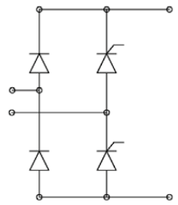
SKBT 28	600-1400	28	89	280	1	16.0	1.8	-40 ... +125	1	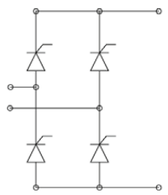
SKBT 40	800-1400	40	92	400	1	16.0	1	-40 ... +125	2	
SKCH 28	400-1400	28	89	280	1	16.0	2.2	-40 ... +125	1	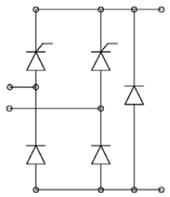
SKCH 40	400-1600	40	92	400	1	16.0	1	-40 ... +125	2	

Footnotes: 2) In production new / 3) Not for new designs

Bridge Rectifier Modules / SEMIPONT

Type	V_{RRM} V_{DRM} V	I_D @ T_C A	T_C °C	I_{TSM} I_{FSM}@T_{jmax} A	$V_{T(TO)}$@T_{jmax} V	r_T@T_{jmax} mΩ	$R_{th(j-c)}$ cont. per chip K/W	T_j °C	Case	Circuit
1 and 3 phase										
SKDT 60	400-1400	60	86	400	1	16.0	1	-40 ... +125	2	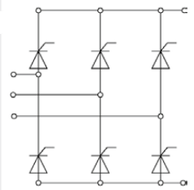
SKDT 115 3)	1200-1600	110	80	950	1.1	6.0	0.84	-40 ... +125	5	
SKDT 145	1200-1600	145	80	1250	0.9	5.0	0.6	-40 ... +125	5	
SKD 31	200-1600	31	100	320	0.85	12.0	2	-40 ... +125	1	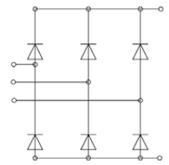
SKD 60	400-1600	60	102	850	0.85	5.0	1	-40 ... +125	2	
SKD 62	400-1800	60	110	425	0.85	8.0	1.5	-40 ... +150	3	
SKD 82	400-1800	80	110	640	0.85	5.0	1.1	-40 ... +150	3	
SKD 100	400-1600	100	93	1000	0.85	5.0	0.85	-40 ... +125	2	
SKD 110	800-1800	110	100	1000	0.85	4.0	0.9	-40 ... +150	4	
SKD 115	1200-1800	110	85	1150	0.8	7.0	1	-40 ... +150	5	
SKD 145	1200-1800	145	85	1700	0.8	4.0	0.8	-40 ... +150	5	
SKD 160	800-1800	205	85	1500	0.85	3.0	0.65	-40 ... +150	4	
SKD 210	900-1800	207	99	1600	0.85	3.0	0.5	-40 ... +150	4	
SKDH 100	800-1400	100	84	850	1	4.5	0.85	-40 ... +125	2	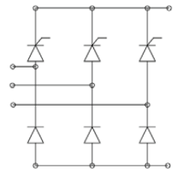
SKDH 115	1200-1600	110	80	950	1.1	6.0	0.84	-40 ... +125	5	
SKDH 145	1200-1600	145	80	1250	0.9	5.0	0.63	-40 ... +125	5	
3 phase with brake chopper										
SKD 116/18-L 75	1800	110	85	1050	0.8	7.0	0.8	-40 ... +125	6	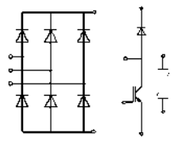
SKD 116/..-L105 2)	1200-1600	110	85	1050	0.8	7.0	1	-40 ... +125	6	
SKD 116/..-L140 2)	1200-1600	110	85	1050	0.8	7.0	1	-40 ... +125	6	
SKD 146/..-L105 2)	1200-1600	140	85	1250	0.8	4.0	0.8	-40 ... +125	6	
SKD 146/..-L140T4 2)	1200-1600	140	85	1250	0.8	4.0	0.8	-40 ... +125	6	
SKDH 116/..L105 2)	1200-1600	110	85	1000	0.8	7.0	1	-40 ... +125	6	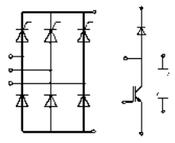
SKDH 116/..L140 2)	1200-1600	110	85	1000	0.8	7.0	1	-40 ... +125	6	
SKDH 146/..-L105 2)	1200-1600	140	85	1250	0.8	4.0	0.8	-40 ... +125	6	
SKDH 146/..-L140 2)	1200-1600	140	85	1250	0.8	4.0	0.8	-40 ... +125	6	

Footnotes: 2) In production new / 3) Not for new designs

Bridge Rectifier Modules / SEMIPONT

Cases

SEMIPONT 1

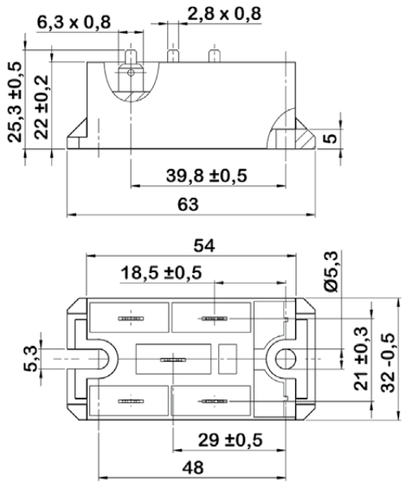

SEMIPONT 2

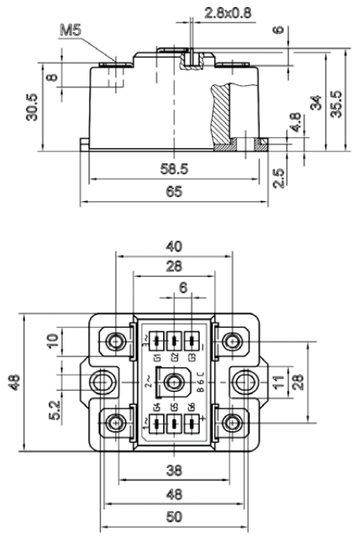

SEMIPONT 3

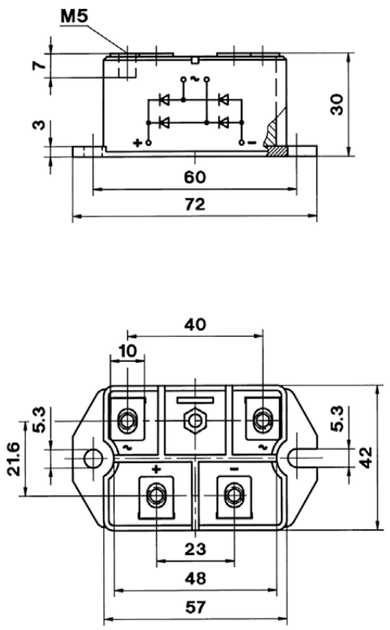

SEMIPONT 4

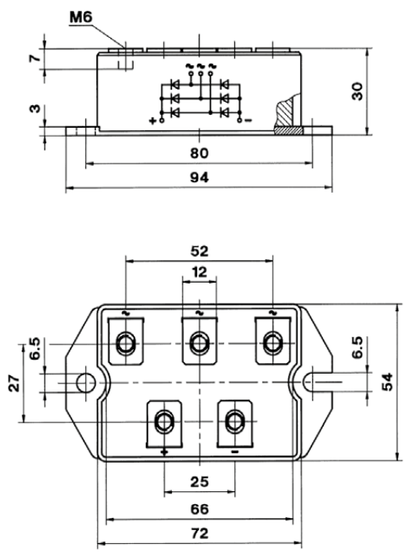

Dimensions in mm

Bridge Rectifier Modules / SEMIPONT

Cases

SEMIPONT 5

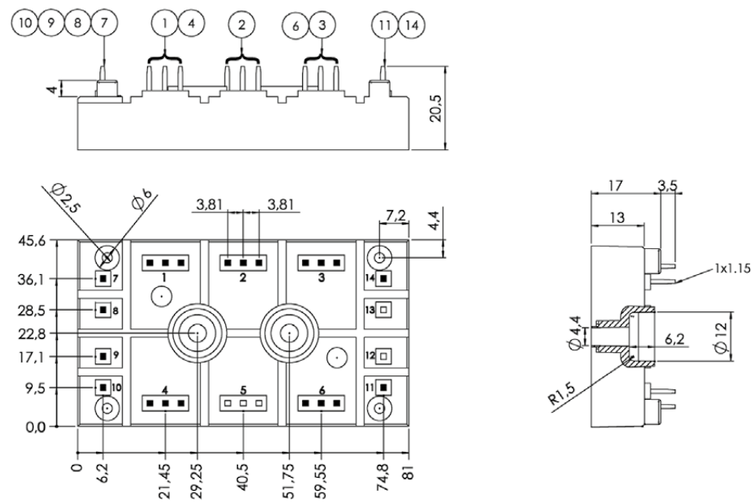

SEMIPONT 6

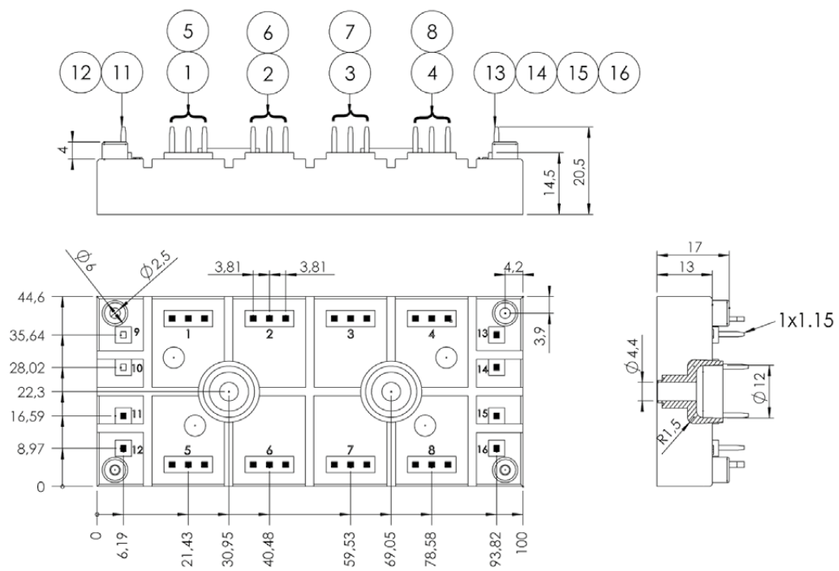

Dimensions in mm

Bridge Rectifier Modules / SEMiX

Type	V_{RRM} V_{DRM} V	I_D @ T_C A	T_C °C	I_{TSM} I_{FSM}@T_{jmax} A	$V_{T(TO)}$@T_{jmax} V	r_T@T_{jmax} mΩ	$R_{th(j-c)}$ per chip K/W	$R_{th(c-s)}$ K/W	T_j °C	Case	Circuit
3 phase											
SEMiX251D12Fs	1200	256	85	1330	1.20	7	0.26	0.04	-40 ... +150	13	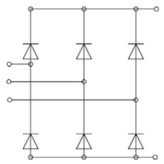
SEMiX291D16s	1600	232	85	1380	0.83	4.6	0.45	0.04	-40 ... +150	13	
SEMiX341D16s	1600	348	85	2000	0.9	2.7	0.22	0.04	-40 ... +130	13	
SEMiX501D17Fs	1700	494	85	2140	1.10	2.7	0.165	0.04	-40 ... +150	13	
SEMiX586D16p[1)]	1600	1278	85	3800	0.916	1.4	0.12	t.b.d.	-40 ... +175	6p	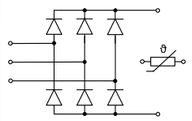
SEMiX636D16p[1)]	1600	1686	85	5100	0.916	1.3	0.09	t.b.d.	-40 ... +175	6p	
SEMiX526D22p[1)]	2200	1252	85	4500	0.834	1.4	0.1	t.b.d.	-40 ... +150	6p	
SEMiX241DH16s	1600	240	85	1900	0.85	4	0.32	0.04	-40 ... +130	13	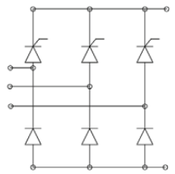
SEMiX245DH16 [1)]	1600	154	80	1800	0.91	3.0	0.2	0.012	-40 ... +130	5p	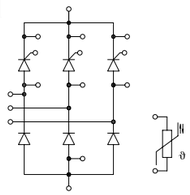
SEMiX365DH16 [1)]	1600	221	80	2750	0.85	2.5	0.14	0.009	-40 ... +130	5p	

Footnotes: 1) Sample status

Cases

SEMiX 6p

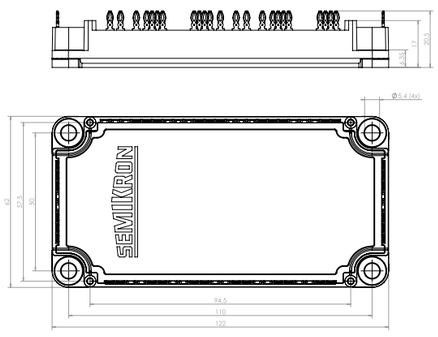

Dimensions in mm

Bridge Rectifier Modules / SEMiX

Cases

SEMiX 13

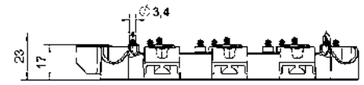

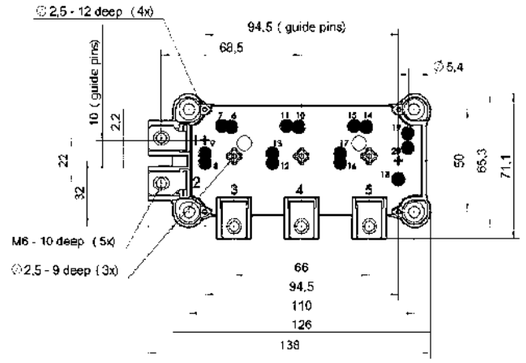

SEMiX 5p

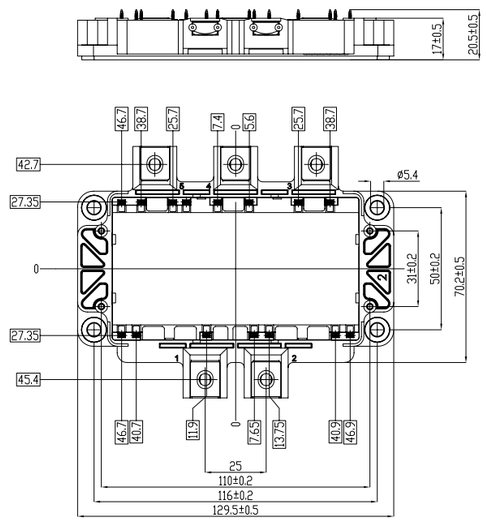

Dimensions in mm

Bridge Rectifier Modules / Power Bridge

Type	V_{RRM} V_{DRM} V	I_D @ $T_{C/S}$ A	$T_{C/S}$ °C	I_{FSM}@T_{jmax} A	$V_{T(TO)}$@T_{jmax} V	r_T@T_{jmax} mΩ	$R_{th(j-s)}$ cont. per chip K/W	T_j °C	Case	Circuit
1 phase										
SKB 25	100-1600	17	75	320	0.85	12.00	8.6	-40 ... +150	G 10b	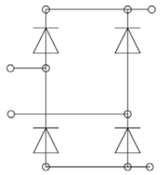
SKB 26	200-2000	18	75	320	0.85	12.00	8.2	-40 ... +150	G 50a	
SKB 30	200-1600	30	94	320	0.85	12.00	3.2	-40 ... +150	G 12, G 13	
SKB 35	400-1600	35	29	330	0.85	7.00	6.6	-40 ... +150	G 10b	
BI 6 P [2)]	400-2200	10	102	165	0.8	24.00	21.2	-40 ... +150	BI P	
BI 25 P [2)]	400-2200	25	26	310	0.85	9.00	21	-40 ... +150	BI P	
3 phase										
SKD 25	200-1600	20	73	320	0.85	12.00	1.9	-40 ... +150	G 11b	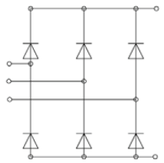
SKD 30	200-1600	30	98	320	0.85	12.00	4.8	-40 ... +150	G 12, G 13	
SKD 33	400-1800	33	110	240	0.8	18.00	2.5	-40 ... +150	G55	
SKD 35	400-1600	36	70	320	0.85	12.00	1.05	-40 ... +150	G 11b	
SKD 35 AV	1200-1600	36	70	320	0.85	12.00	1.15	-40 ... +150	G 11b	
SKD 51	400-1800	50	127	700	0.8	8.50	1.2	-40 ... +150	G51	
SKD 53	400-1800	53	100	270	0.8	13.00	1.9	-40 ... +150	G55	
SKD 83	400-1800	83	95	560	0.8	7.50	1.4	-40 ... +150	G55	
DBI 6 P [2)]	400-2200	9	113	200	0.8	24.00	12.9	-40 ... +150	DBI P	
DBI 25 P [2)]	400-2200	27	32	310	0.85	9.00	11.1	-40 ... +150	DBI P	

Footnotes: 2) In production new

Cases

G 10b, G 11b

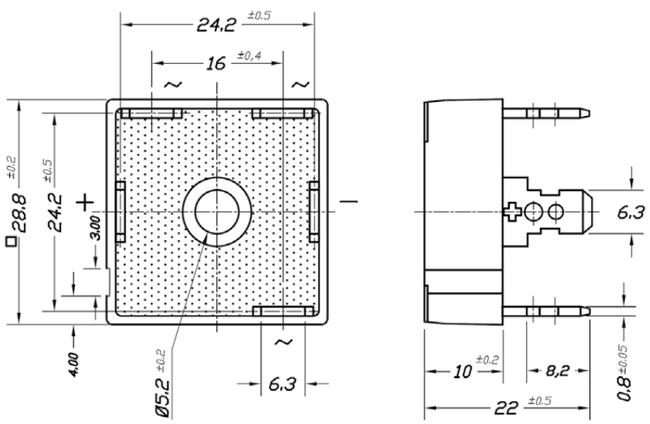

Dimensions in mm

Bridge Rectifier Modules / Power Bridge

Cases

G 50a

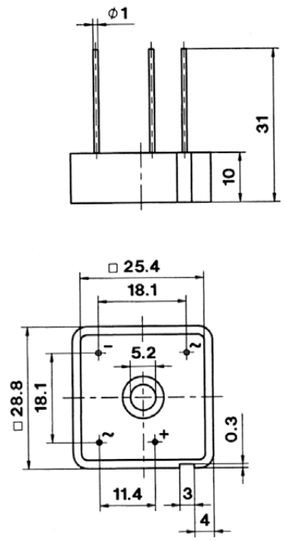

G 12, G 13

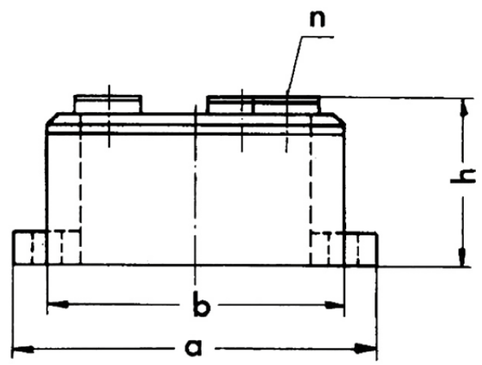

Cases	a	b	h	n
G 12, 13	55	45	24	M 4

Dimensions in mm

Bridge Rectifier Modules / Power Bridge

Cases

BI P

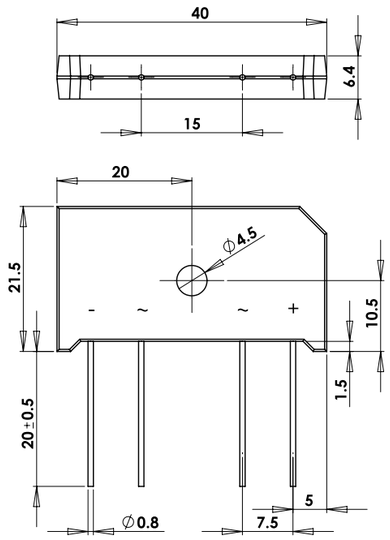

G 51

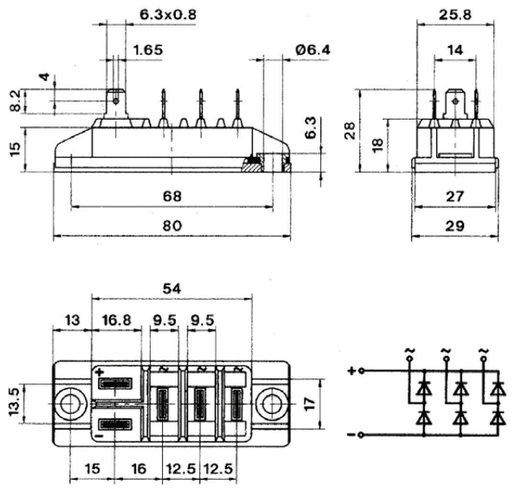

Dimensions in mm

Bridge Rectifier Modules / Power Bridge

Cases

G 55

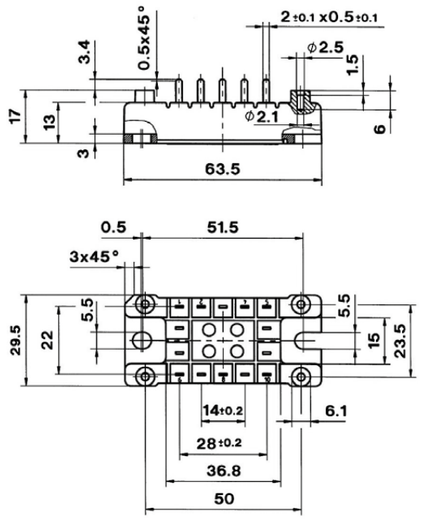

DBI P

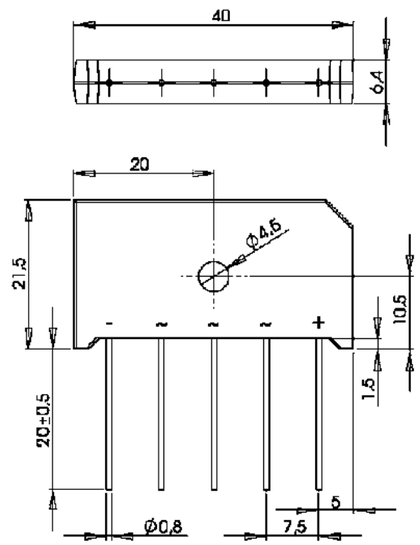

Dimensions in mm

Intelligent Power Modules

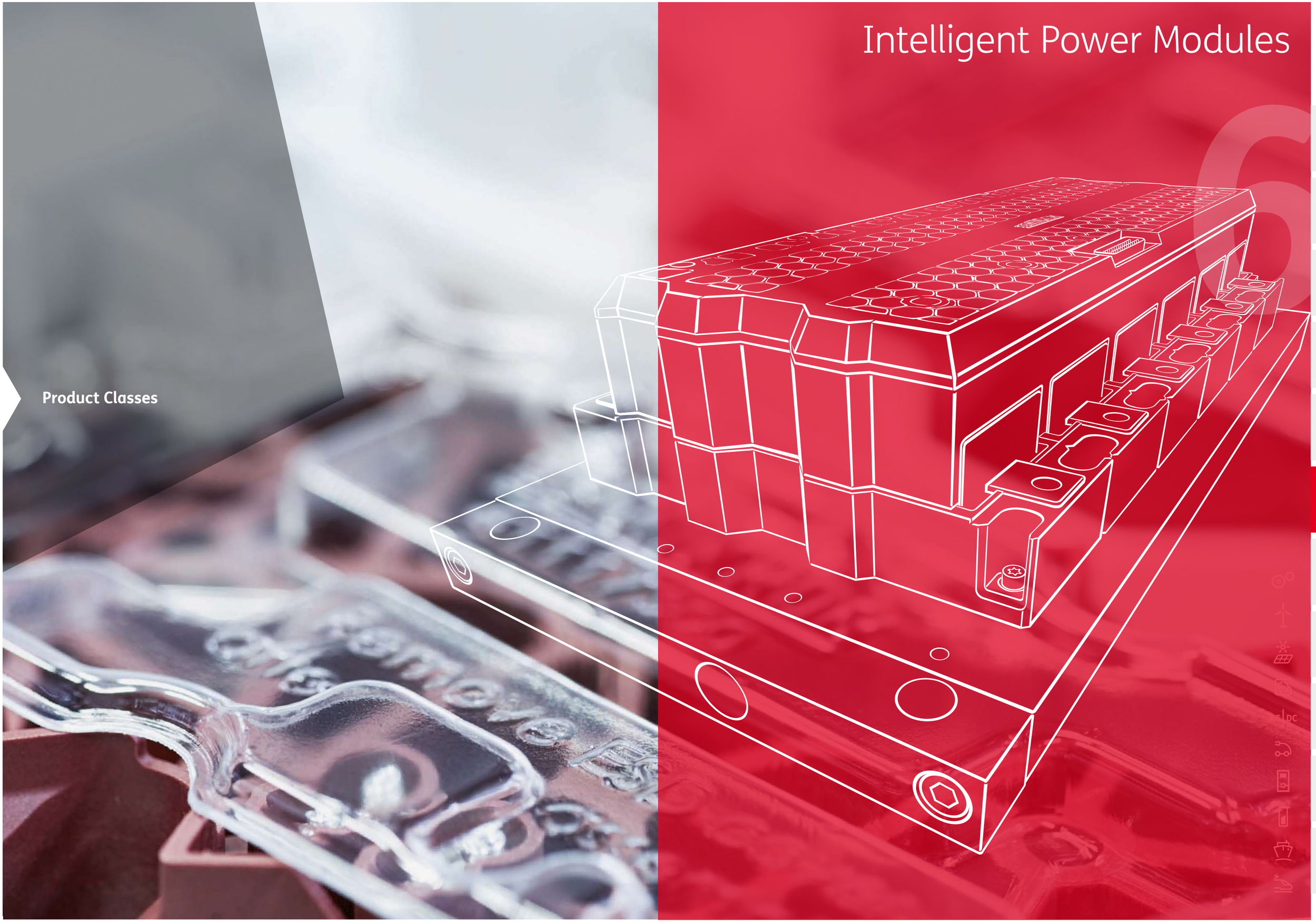

Product Classes

IPM
SEMIKRON Offers Highly Integrated IPMs

The SKiiP IPMs represent the benchmark
for regenerative inverter solutions up to 6MW.

SKiiP 3/4/X	158
SKiiP Accessories	167

For detailed information please refer to data sheets.

Further information: www.semikron.com/ipm

SKiiP®3

6-pack
half-bridge

1200V up to 1700V

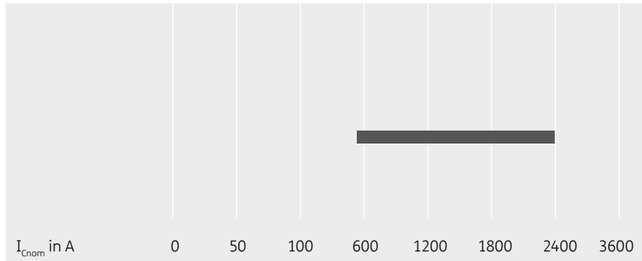

SKiiP®4

half-bridge

1200V up to 1700V

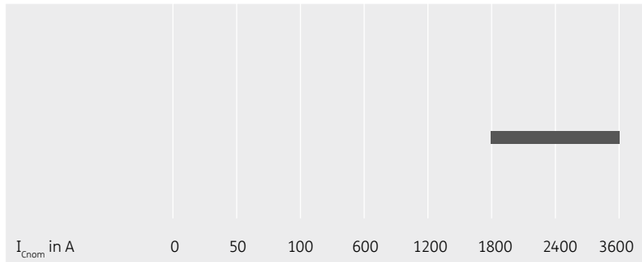

SKiiP®X

6-pack

1700V

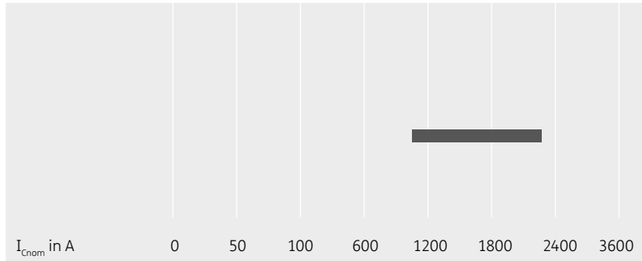

IPM / SKiiP

Type	IGBT				Diode			Module		
	I_C @ T_S = 25°C	I_{nom}	$V_{CE(sat)}$ @ T_j = 25°C typ.	E_{on} + E_{off}	I_F @ T_S = 25°C	V_F @ T_j = 25°C typ.	E_{rr}	Options F=F-Option U=U-Option S=SKiFace Adapter		Circuit
	A	A	V	mJ	A	V	mJ			
1200V - IGBT 3 (Trench) - SKiiP3										
SKiiP 603 GD123-3DUL V3	627	600	1.7	195	508	1.50	28	-	S33	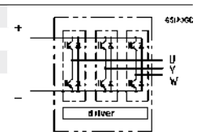
SKiiP 603 GD123-3DUW V3	627	600	1.7	195	508	1.50	28	-	S33	
SKiiP 613 GD123-3DUL V3	577	600	1.7	195	466	1.50	28	-	S33	
SKiiP 613 GD123-3DUW V3	577	600	1.7	195	466	1.50	28	-	S33	
SKiiP 1213 GB123-2DL V3	1145	1200	1.7	390	925	1.50	56	F	S23	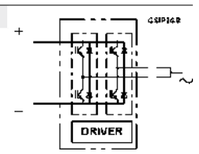
SKiiP 1213 GB123-2DW V3	1145	1200	1.7	390	925	1.50	56	F	S23	
SKiiP 1813 GB123-3DL V3	1695	1800	1.7	585	1411	1.50	84	F,U	S33	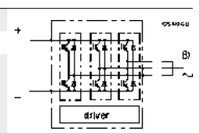
SKiiP 1813 GB123-3DW V3	1695	1800	1.7	585	1411	1.50	84	F,U	S33	
SKiiP 1813 GB123-3DUL V3	1695	1800	1.7	585	1411	1.50	84	F,U	S33	
SKiiP 2413 GB123-4DUL V3	2280	2400	1.7	780	1807	1.50	112	F,U	S43	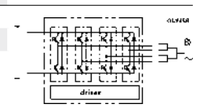
SKiiP 2413 GB123-4DL V3	2280	2400	1.7	780	1807	1.50	112	F,U	S43	
SKiiP 2413 GB123-4DW V3	2280	2400	1.7	780	1807	1.50	112	F,U	S43	
1200V - IGBT 4 (Trench) - SKiiP4										
SKiiP 1814 GB12E4-3DUL	2345	1800	2.01	1260	1776	2.33	150	F,S	S34	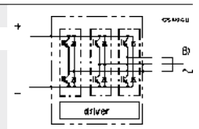
SKiiP 1814 GB12E4-3DUW	2345	1800	2.01	1260	1776	2.33	150	F,S	S34	
SKiiP 1814 GB12E4-3DUSL	2345	1800	2.01	1260	1776	2.33	150	F,S	S34	
SKiiP 2414 GB12E4-4DUL	3109	2400	2.01	1680	2369	2.33	200	F,S	S44	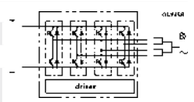
SKiiP 2414 GB12E4-4DUW	3109	2400	2.01	1680	2369	2.33	200	F,S	S44	
SKiiP 2414 GB12E4-4DUSL	3109	2400	2.01	1680	2369	2.33	200	F,S	S44	
SKiiP 2414 GB12E4-4DUL	3109	2400	2.01	1680	2369	2.33	200	F,S	S44	
SKiiP 3614 GB12E4-6DUL	4664	3600	2.01	2520	3558	2.33	300	F,S	S64	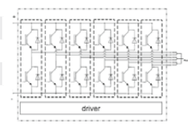
SKiiP 3614 GB12E4-6DUW	4664	3600	2.01	2520	3558	2.33	300	F,S	S64	
SKiiP 3614 GB12E4-6DULR	4664	3600	2.01	2520	3558	2.33	300	F,S	S64	
SKiiP 3614 GB12E4-6DUSL	4664	3600	2.01	2520	3558	2.33	300	F,S	S64	
SKiiP 3614 GB12E4-6DUL	4664	3600	2.01	2520	3558	2.33	300	F,S	S64	
1700V - IGBT 3 (Trench) - SKiiP3										
SKiiP 513 GD172-3DUL V3	540	500	1.9	288	438	2.00	43	-	S33	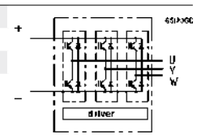
SKiiP 513 GD172-3DUW V3	540	500	1.9	288	438	2.00	43	-	S33	
SKiiP 603 GD172-3DUL V3	587	570	1.9	288	476	2.00	43	-	S33	
SKiiP 603 GD172-3DUW V3	570	570	1.9	288	476	2.00	43	-	S33	

Footnotes: 1) Sample status / 2) In production new

IPM / SKiiP

Type	IGBT				Diode			Module		
	I_C @ T_S = 25°C	I_{nom}	$V_{CE(sat)}$ @ T_j = 25°C typ.	E_{on} + E_{off}	I_F @ T_S = 25°C	V_F @ T_j = 25°C typ.	E_{rr}	Options F=F-Option U=U-Option S=SKiFace Adapter		Circuit
	A	A	V	mJ	A	V	mJ			
1700V - IGBT 3 (Trench) - SKiiP3										
SKiiP 1013 GB172-2DL V3	1072	1000	1.9	575	879	2.00	86	F	S23	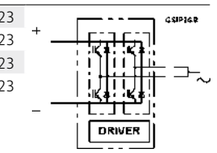
SKiiP 1013 GB172-2DW V3	1072	1000	1.9	575	879	2.00	86	F	S23	
SKiiP 1203 GB172-2DL V3	1159	1200	1.9	575	961	2.00	86	F	S23	
SKiiP 1203 GB172-2DW V3	1159	1200	1.9	575	961	2.00	86	F	S23	
SKiiP 1513 GB172-3DL V3	1589	1500	1.9	863	1336	2.00	128	F,U	S33	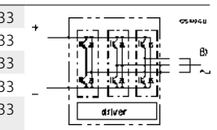
SKiiP 1513 GB172-3DW V3	1589	1500	1.9	863	1336	2.00	128	F,U	S33	
SKiiP 1513 GB172-3DFL V3 2)	1589	1500	1.9	863	1336	2.00	128	F,U	S33	
SKiiP 1803 GB172-3DL V3	1744	1800	1.9	863	1454	2.00	128	F,U	S33	
SKiiP 1803 GB172-3DW V3	1744	1800	1.9	863	1454	2.00	128	F,U	S33	
SKiiP 2013 GB172-4DL V3	2102	2000	1.9	1150	1758	2.00	171	F,U	S43	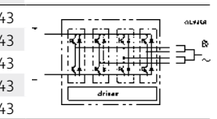
SKiiP 2013 GB172-4DW V3	2102	2000	1.9	1150	1758	2.00	171	F,U	S43	
SKiiP 2013 GB172-4DFL V3	2102	2000	1.9	1150	1758	2.00	171	F,U	S43	
SKiiP 2403 GB172-4DL V3	2282	2400	1.9	1150	1921	2.00	171	F,U	S43	
SKiiP 2403 GB172-4DW V3	2282	2400	1.9	1150	1921	2.00	171	F,U	S43	
1700V - IGBT 4 (Trench) - SKiiP4										
SKiiP 1814 GB17E4-3DUL	2547	1800	2.12	2130	1771	2.02	498	F,S	S34	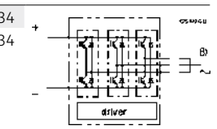
SKiiP 1814 GB17E4-3DUW	2547	1800	2.12	2130	1771	2.02	498	F,S	S34	
SKiiP 2414 GB17E4-4DUL 2)	3385	2400	2.12	2840	2362	2.02	664	F,S	S44	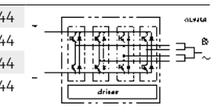
SKiiP 2414 GB17E4-4DUW 2)	3385	2400	2.12	2840	2362	2.02	664	F,S	S44	
SKiiP 2414 GB17E4-4DPVL 1)	3385	2400	2.12	2840	2362	2.02	664	F,S	S44	
SKiiP 2414 GB17E4-4DPVW 1)	3385	2400	2.12	2840	2362	2.02	664	F,S	S44	
SKiiP 3614 GB17E4-6DUL	5078	3600	2.12	6840	3547	2.02	996	F,S	S64	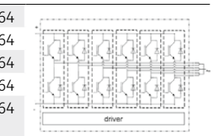
SKiiP 3614 GB17E4-6DUW	5078	3600	2.12	6840	3547	2.02	996	F,S	S64	
SKiiP 3614 GB17E4-6DULR 2)	5078	3600	2.12	6840	3547	2.02	996	F,S	S64	
SKiiP 3614 GB17E4-6DPVLR 1)	5078	3600	2.12	6840	3547	2.02	996	F,S	S64	
SKiiP 3614 GB17E4-6DPVL 1)	5078	3600	2.12	6840	3547	2.02	996	F,S	S64	
1700V - IGBT 4 (Trench) - SKiiPX										
SKiiP 181X GD17E4-9DW 1)	1859	1620	2.01	1700	1645	1.89	600	-	-	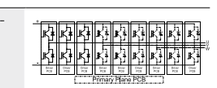

Footnotes: 1) Sample status / 2) In production new

IPM / SKiiP

SKiiP 3

Case S 23 mounted on P3016 heat sink

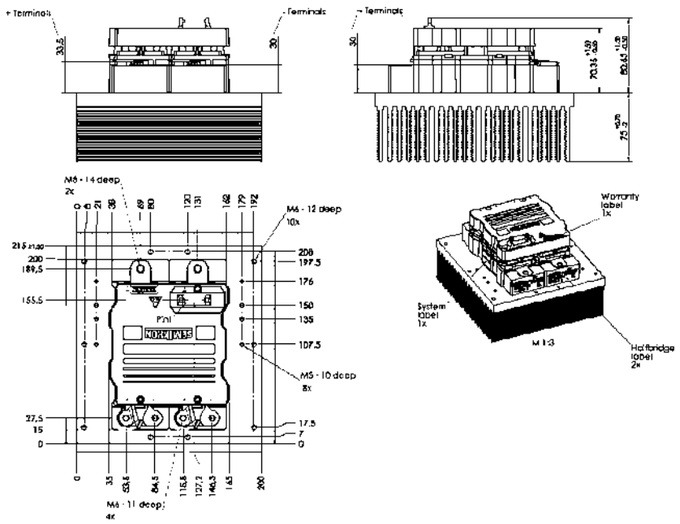

Weight without heat sink:	1,7 kg
P3016:	4,4 kg

Case S 23 mounted on liquid cooled heat sink NWK 40

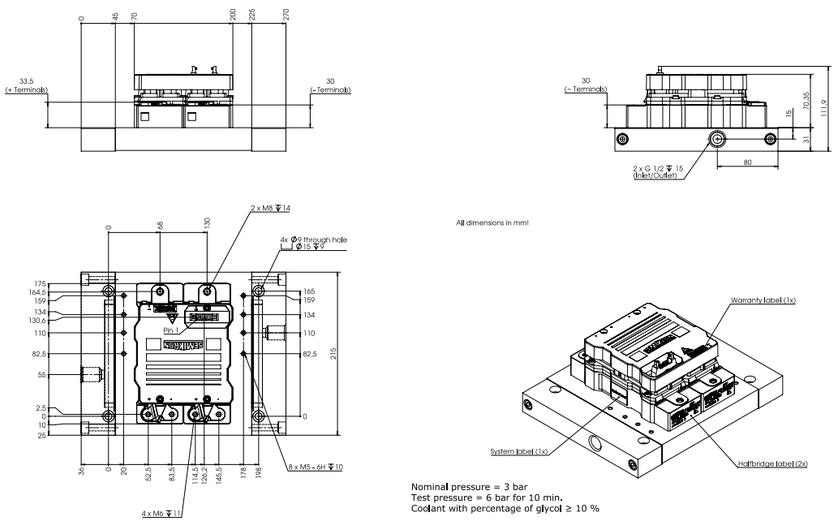

Nominal pressure = 3 bar
Test pressure = 6 bar for 10 min.
Coolant with percentage of glycol ≥ 10 %

NWK 40:	2,8 kg

Dimensions in mm

IPM / SKiiP

SKiiP 3

Case S 33 mounted on P3016 heat sink

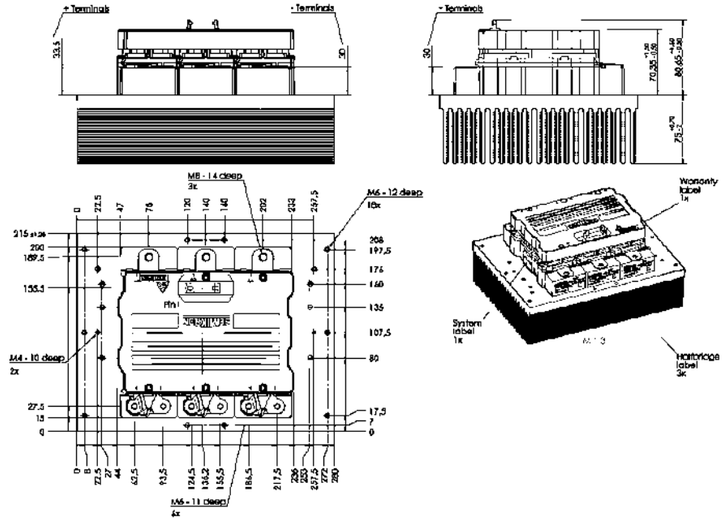

Weight without heat sink:	2,4 kg
P3016:	6,2 kg

Case S 33 mounted on liquid cooled heat sink NWK 40

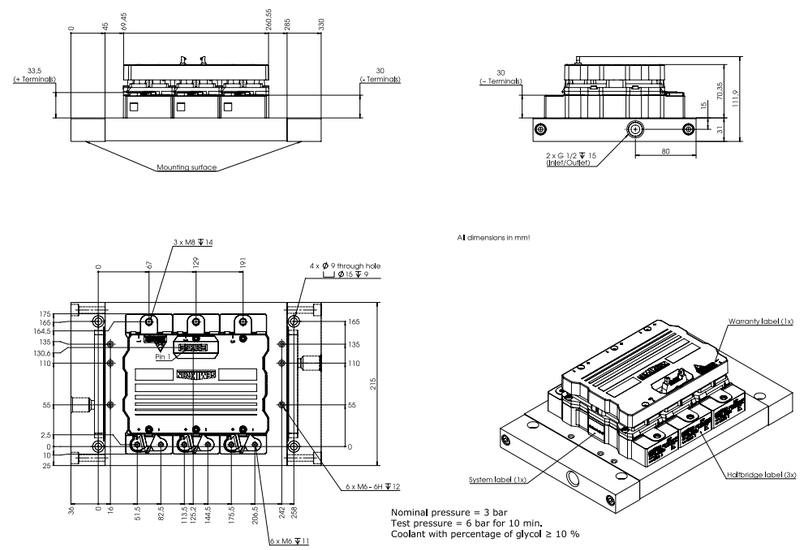

Nominal pressure = 3 bar
Test pressure = 6 bar for 10 min.
Coolant with percentage of glycol ≥ 10 %

NWK 40:	5,2 kg

Dimensions in mm

IPM / SKiiP

SKiiP 3

Case S 43 mounted on P3016 heat sink

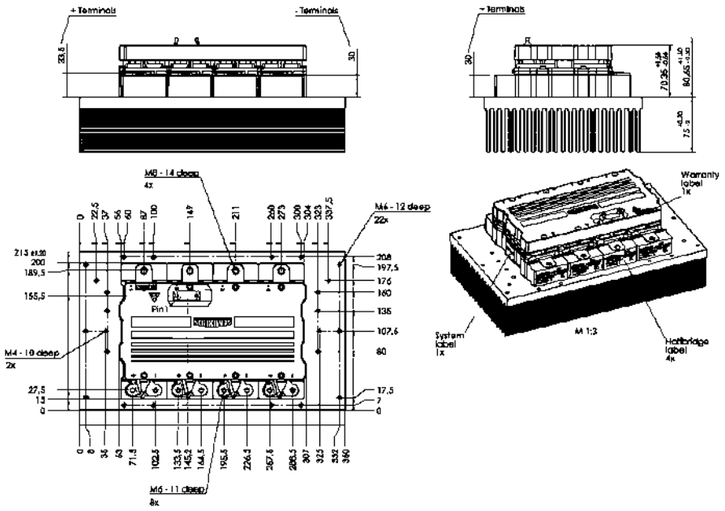

Weight without heat sink:	3,1 kg
P3016:	8,0 kg

Case S 43 mounted on liquid cooled heat sink NWK 40

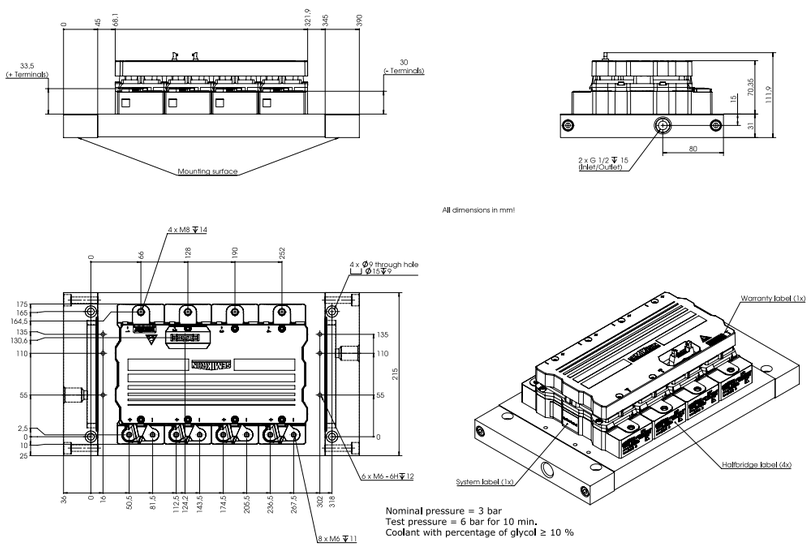

NWK 40:	6,2 kg

Dimensions in mm

SKiiP 4

Case S 34 mounted on P4016 heat sink

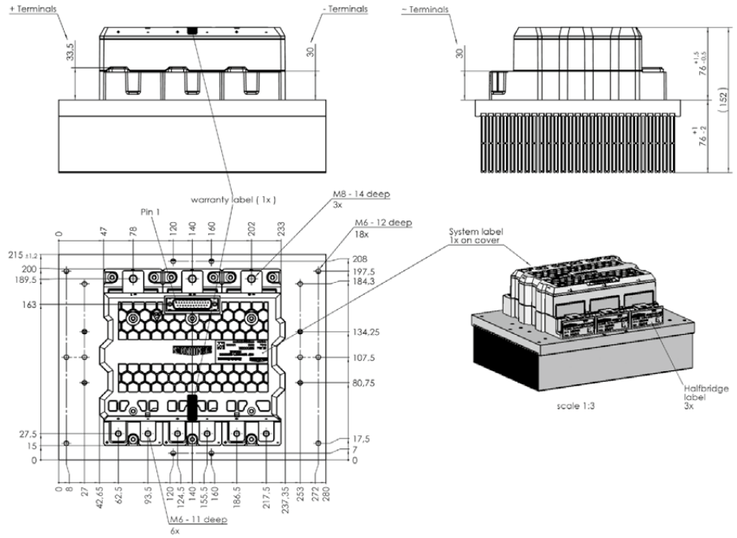

Weight without heat sink:	2,48 kg
P4016:	5,9 kg

Case S 34 mounted on liquid cooled heat sink NHC

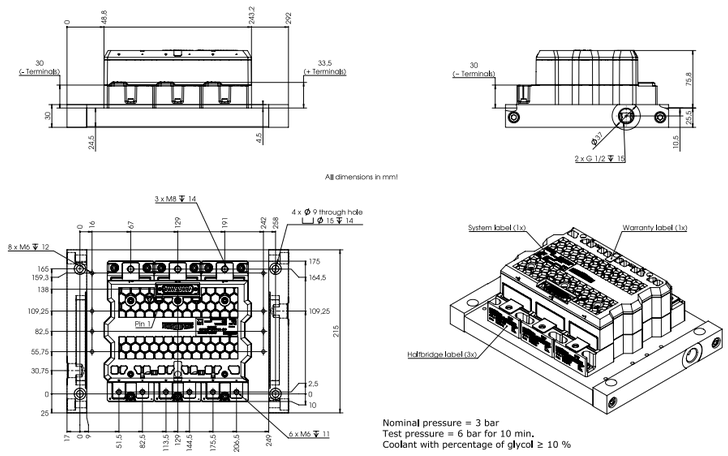

NHC:	3,49 kg

Dimensions in mm

IPM / SKiiP

SKiiP 4

Case S 44 mounted on P4016 heat sink

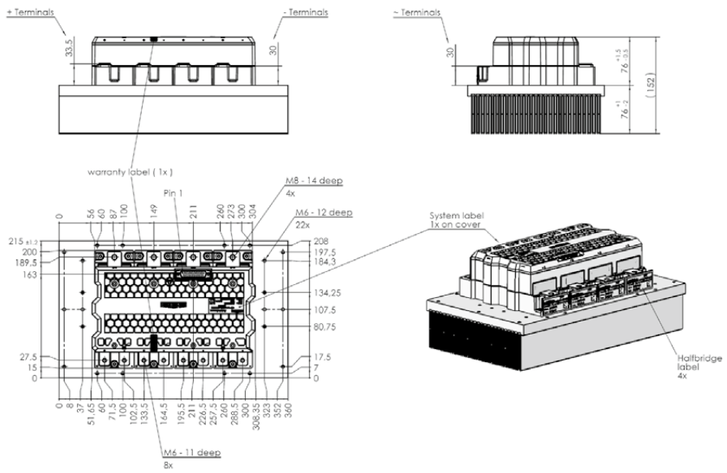

Weight without heat sink:	3,22 kg
P4016:	7,55 kg

Case S 44 mounted on liquid cooled heat sink NHC

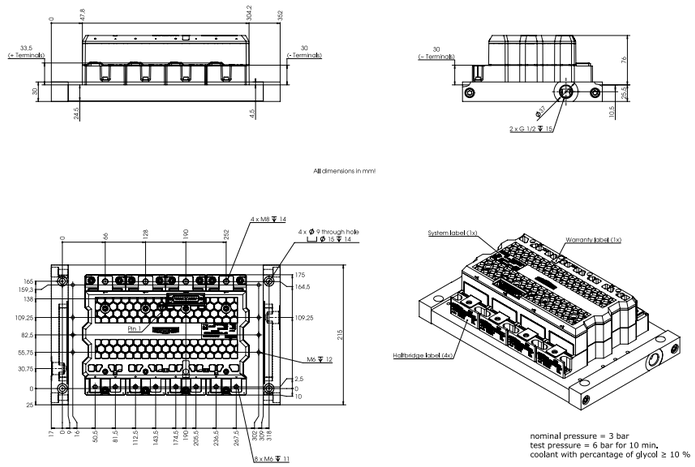

NHC:	4,25 kg

Dimensions in mm

IPM / SKiiP

SKiiP 4

Case S 64 mounted on P4016 heat sink

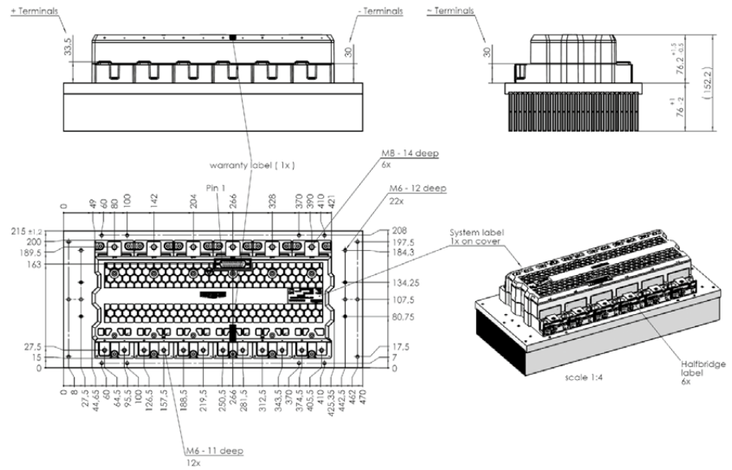

Weight without heat sink:	4,84 kg
P4016:	9,9 kg

Case S 64 mounted on liquid cooled heat sink NHC

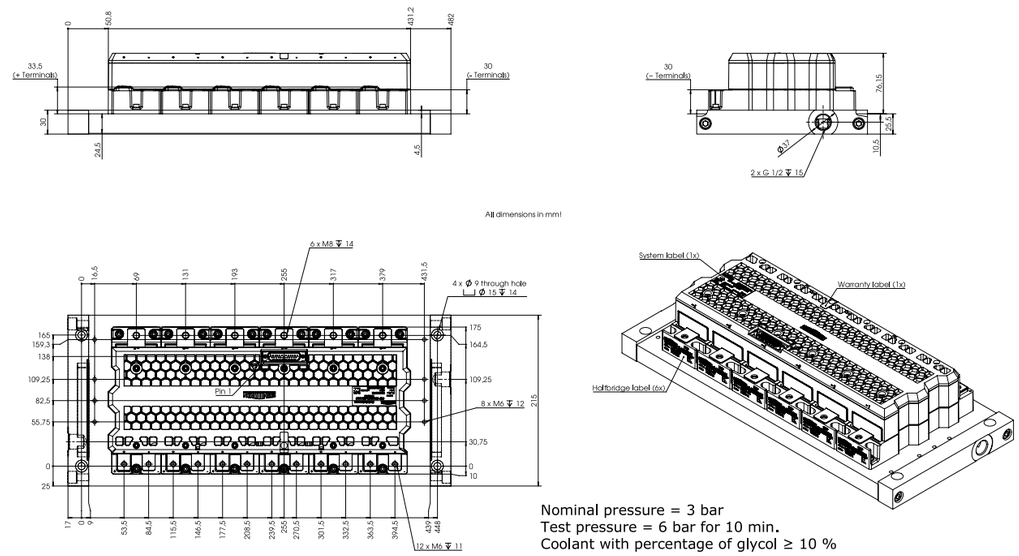

NHC:	5,77 kg

Dimensions in mm

IPM / SKiiP

SKiiP 4

Case S 64 mounted on P4016 heat sink with 90° rotated fins

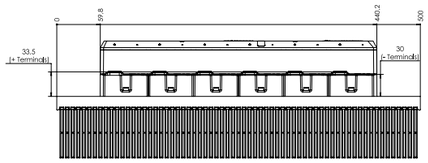

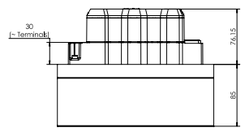

All dimensions in mm!

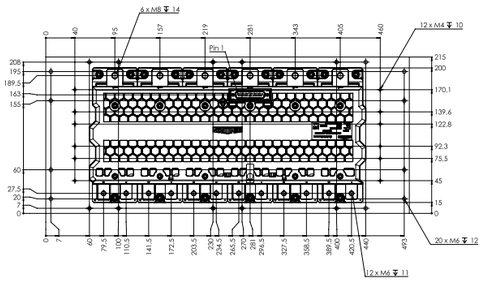

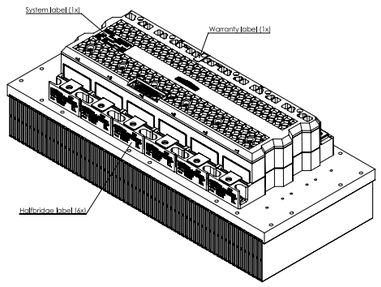

Weight without heat sink:	4,84 kg
P4016:	9,9 kg

Dimensions in mm

IPM / SKiiP Accessories

Type	
F-Option SKiiP3	
SKiiP3 F-Option	Fiber optic control board for SKiiP3
F-Option SKiiP4	
SKiiP4 F-Option	Fiber optic control board for SKiiP4
SKiiP4 F-Option with D-Sub connector	Fiber optic control board for SKiiP4
SKiiP3 Parallel Board	
SKiiP3 Parallel Board 4-fold	Board for paralleling of 4 SKiiP3, F-Option usage possible
SKiiP3 Parallel Board 3-fold	Board for paralleling of 3 SKiiP3, F-Option usage possible
SKiiP3 Parallel Board 2-fold	Board for paralleling of 2 SKiiP3, F-Option usage possible
SKiiP4 Parallel Board	
SKiiP4 Parallel Board 4-fold without F-Option	Board for paralleling of 4 SKiiP4, F-Option usage not possible
SKiiP4 Parallel Board 4-fold F-Option	Board for paralleling of 4 SKiiP4, F-Option usage possible
SKiiP4 Parallel Board 3-fold without F-Option	Board for paralleling of 3 SKiiP4, F-Option usage not possible
SKiiP4 Parallel Board 3-fold F-Option	Board for paralleling of 3 SKiiP4, F-Option usage possible
SKiiP4 Parallel Board 2-fold without F-Option	Board for paralleling of 2 SKiiP4, F-Option usage not possible
SKiiP4 Parallel Board 2-fold F-Option	Board for paralleling of 2 SKiiP4, F-Option usage possible
SKiFace Adapter Board	
SKiiP4 SKiFace Adapter UZK	Adapter board to connect SKiiP4 to SKiiP3 controller with DC-Link voltage measurement function
SKiiP4 SKiFace Adapter Temp	Adapter board to connect SKiiP4 to SKiiP3 controller with temperatur measurement function

IGBT Drivers

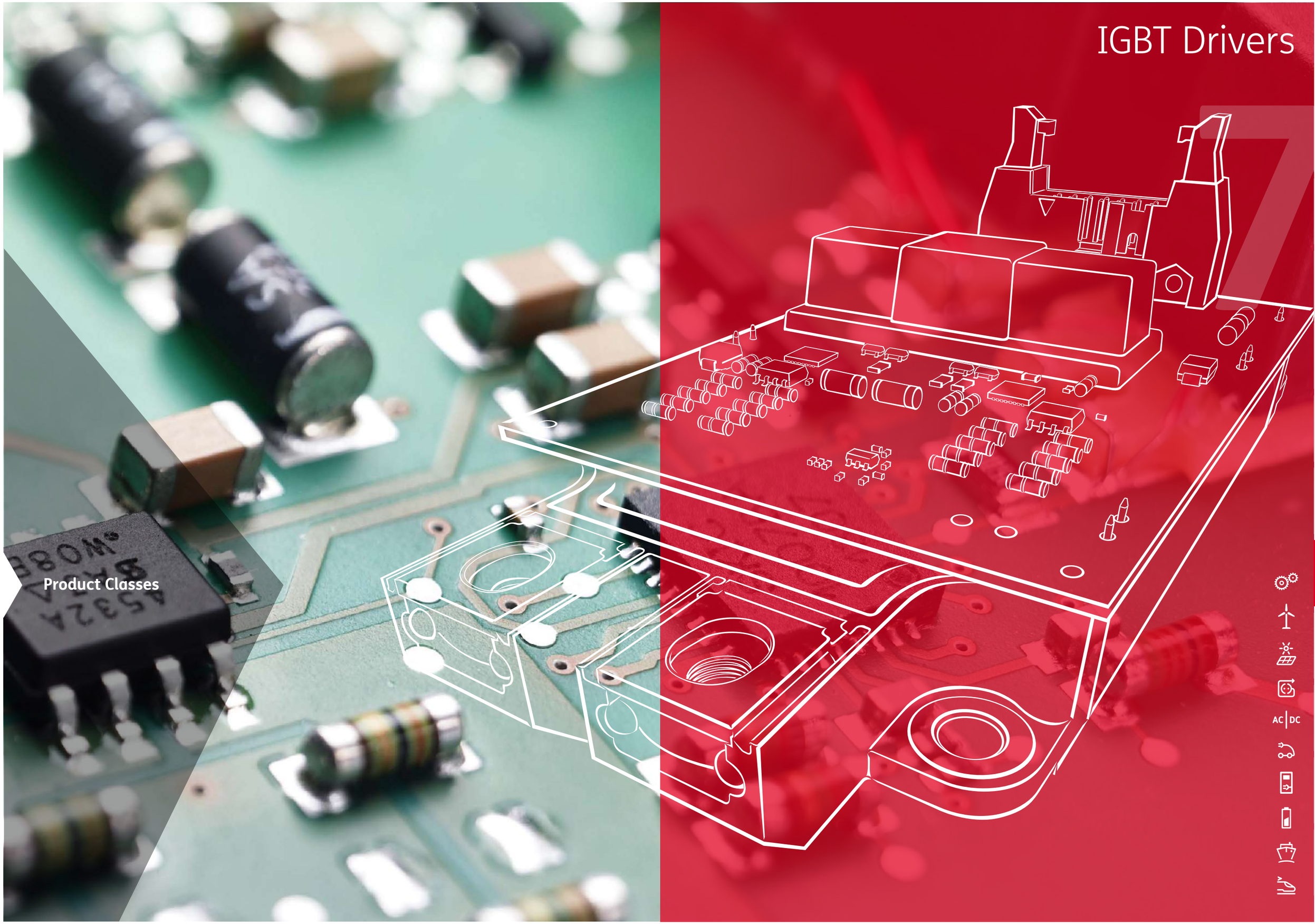

Product Classes

IGBT Driver
SEMIKRON IGBT Driver Family

SEMIKRON offers two different IGBT driver families for any application. Driver cores from the SKHI and SKYPER family can be optimized using adapter boards for each module type. Drivers such as the SKYPER Prime offer a fully qualified plug & play solution, saving time and costs in application. The SKYPER family with 1W to 10W output power per channel covers the whole range of inverters from 30kW to 2MW. The high integration level of SEMIKRON's new ASIC chipset ensures safe IGBT gate control throughout the entire lifecycle. Short circuits are managed very fast by separate error channels.

SoftOff and over voltage feedback avoid dangerous over voltages. The mixed signal ASICs guarantee minimum tolerances over the full temperature range. MLI or paralleled IGBT topologies are managed thanks to adjustable error management. With an optimized interface and adjustable filter settings, the SKYPER family operates safely in noisy environments. The SEMIKRON adapter boards enable a wide range of inverter platforms to be built using various types of IGBT modules.

The latest highlights are the SKYPER 12 driver core and the plug & play driver SKYPER Prime that features electrical and optical interfaces. SKYPER 12 is the latest driver core which delivers 20A output but is smaller than a matchbox. Thanks to its features and robustness, this driver is the perfect solution for anything from simple drives to ambitious interleaved applications. The SKYPER Prime offers integrated insulated DC link and temperature measurement and can help the customer reduce system costs significantly.

SKYPER & SKHI 172

For detailed information please refer to data sheets.

Further information: www.semikron.com/igbt-driver

SKYPER®

Plug & play driver

600V up to 1700V

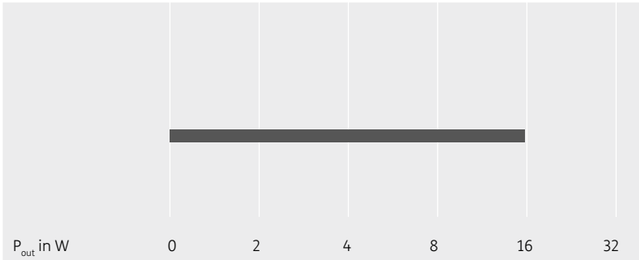

SKYPER® & SKHI

Driver cores

900V up to 1700V

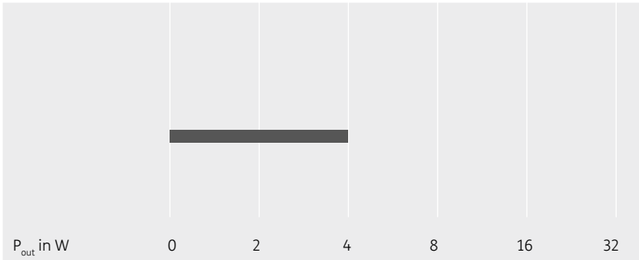

SKYPER® & SKHI

Adapter boards

1200V up to 1700V

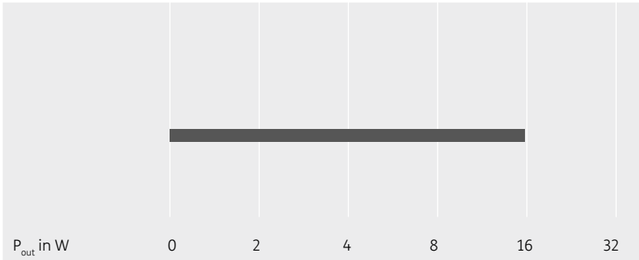

IGBT Driver

Type	Channels	V_{CE} V	$V_{G(on)}$ V	$V_{G(off)}$ V	$I_{outPEAK}$ A	$Q_{out/pulse}$ µC	f_{max} kHz	VisoIIO kV	dv/dt kV/µs
Driver									
SKHI 10/12 R	1	1200	15	-8	8	9.6	100	2500	75
SKHI 10/17 R	1	1700	15	-8	8	9.6	100	4000	75
SKHI 23/12 R	2	1200	15	-8	8	4.8	100	2500	75
SKHI 23/17 R	2	1700	15	-8	8	4.8	100	4000	75
SKHIT 01 R 7)	3	528	-	-	-	-	10	2500	-
SKYPER 12 press-fit 300A	2	1200	15	-8	15	8	20	4000	50
SKYPER 12 press-fit 450A	2	1200	15	-8	15	8	13	4000	50
SKYPER 12 press-fit 600A	2	1200	15	-8	15	8	10	4000	50
SKYPER 12 press-fit C 300A	2	1200	15	-8	15	8	20	4000	50
SKYPER 12 press-fit C 450A	2	1200	15	-8	15	8	13	4000	50
SKYPER 12 press-fit C 600A	2	1200	15	-8	15	8	10	4000	50
SKYPER 12 press-fit 450A 1700V 1)	2	1700	15	-8	15	8	9	4000	50
SKYPER 12 press-fit 600A 1700V 1)	2	1700	15	-8	15	8	7	4000	50
SKYPER 12 press-fit C 450A 1700V 1)	2	1700	15	-8	15	8	9	4000	50
SKYPER 12 press-fit C 600A 1700V 1)	2	1700	15	-8	15	8	7	4000	50
SKYPER PRIME 1000A / 1700V PP 2)	2	1700	15	-8	15	10	10	5000	50
SKYPER PRIME 1000A / 1700V ST10 2)	2	1700	15	-8	15	7	10	5000	50
SKYPER PRIME 1400A / 1700V PP 2)	2	1700	15	-8	15	13.5	7	5000	50
SKYPER PRIME 1400A / 1700V ST10 2)	2	1700	15	-8	15	10	10	5000	50
SKYPER PRIME 1400A / 1200V PP 2)	2	1200	15	-8	15	10	10	5000	50
SKYPER PRIME 1400A / 1200V ST10 2)	2	1200	15	-8	15	7.5	10	5000	50
SKYPER PRIME O 1400A / 1200V PP 1)	2	1200	15	-8	15	10	10	5000	50
SKYPER PRIME O 1400A / 1200V ST10 1)	2	1700	15	-8	15	10	10	5000	50
SKYPER PRIME O 1400A / 1700V PP 1)	2	1700	15	-8	15	13.5	7	5000	50
SKYPER PRIME O 1400A / 1700V ST10 1)	2	1700	15	-8	15	10	10	5000	50
Driver Core									
SKHI 21A R 8)	2	1200	15	0	8	4	50	2500	50
SKHI 22 A/B H4 R	2	1700	15	-7	8	4	50	4000	50
SKHI 22 A/B R	2	1200	15	-7	8	4	50	2500	50
SKHI 24 R	2	1700	15	-8	15	5	50	4000	50
SKHI 61 R 3)	6	900	15	-7	2	1	50	2500	15
SKHI 71 R 3)	7	900	15	-7	2	1	50	2500	15
SKYPER 12 R 1)	2	1700	15	-8	20	20	50	5000	50
SKYPER 32 R	2	1700	15	-7	15	2.5	50	4000	50
SKYPER 32 PRO R	2	1700	15	-7	15	6.3	50	4000	50
SKYPER 42 R	2	1700	15	-8	30	50	100	4000	100
SKYPER 42 No T_D	2	1700	15	-8	30	50	100	4000	100
SKYPER 42 R/02 (Coated type) 2)	2	1700	15	-8	30	50	100	4000	100
SKYPER 42 LJ R	2	1700	15	-8	20	20	100	5000	100
SKYPER 42 LJ R (coated) 2)	2	1700	15	-8	20	20	100	5000	100
Adapter Board									
Board 1 SKYPER 32 R	2	1700	15	-7	15	2.5	50	4000	50
Board 1 SKYPER 32PRO R	2	1700	15	-7	15	6.3	50	4000	50
Board 2 // 4S SKYPER 42 R	2	1200	15	-8	30	50	100	4000	100
Board 2 generic SKYPER 42 R	2	1700	15	-8	30	50	100	4000	100
Board 2//3S SKYPER 42 R	2	1700	15	-8	30	50	100	4000	100
Board 2S SKYPER 32 PRO R Gold	2	1700	15	-7	15	6.3	50	4000	50
Board 2S SKYPER 32 R Gold	2	1700	15	-7	15	2.5	50	4000	50
Board 3S SKYPER 32 PRO R Gold 2)	2	1700	15	-7	15	6.3	50	4000	50
Board 3S SKYPER 32 R Gold	2	1700	15	-7	15	2.5	50	4000	50
Board 4S SKYPER 32 PRO R Gold	2	1700	15	-7	15	6.3	50	4000	50
Board 4S SKYPER 32 R Gold	2	1700	15	-7	15	2.5	50	4000	50
Board 63 GB SKYPER 42 R	2	1700	15	-8	30	50	100	4000	100
Board 93 GB SKYPER 42 R 2)	2	1700	15	-8	30	50	100	4000	100

Footnotes: 1) Sample status / 2) In production new / 3) Not for new designs / 7) Thyristor Driver / 8) MOSFET Driver

Stacks

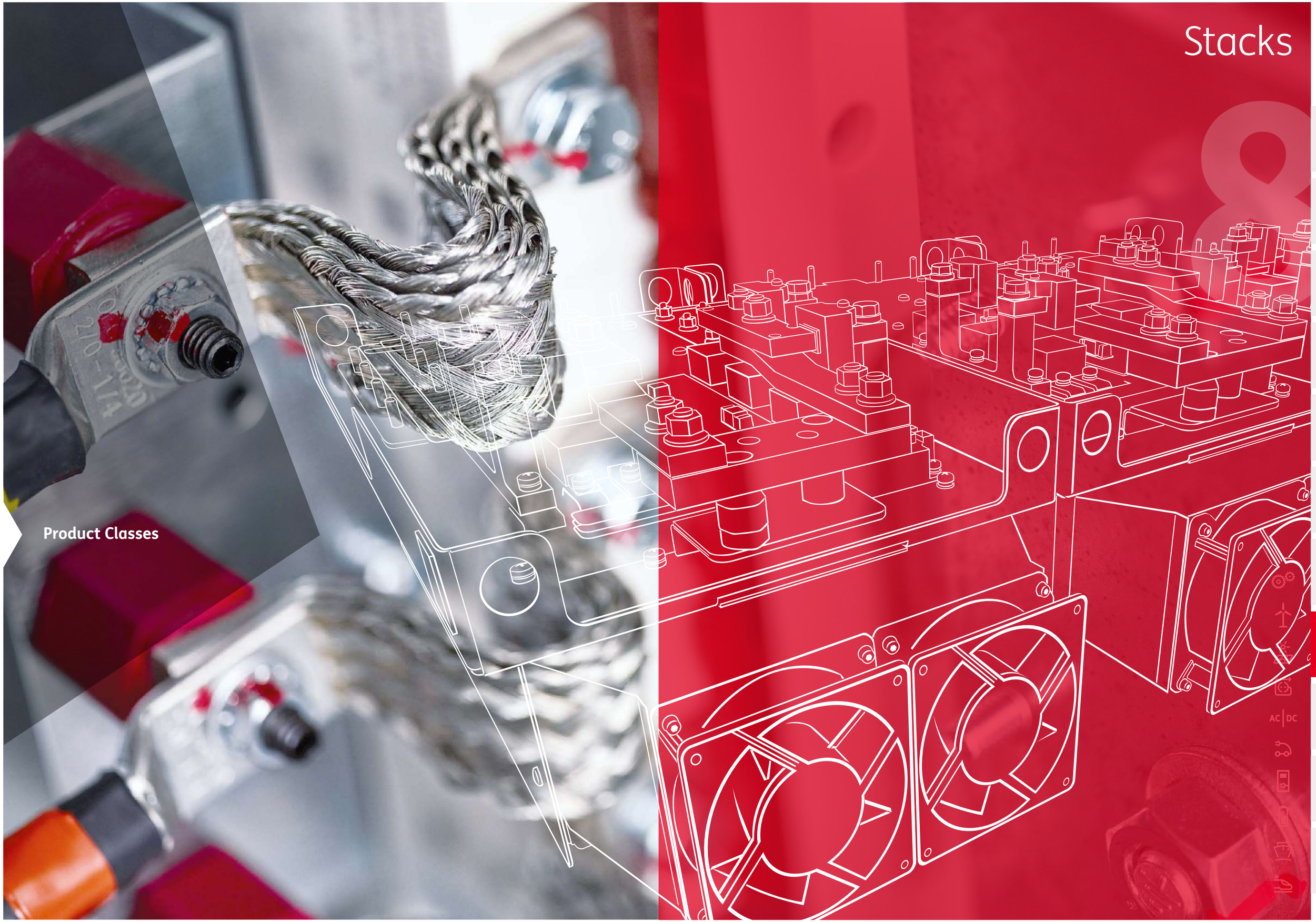

Product Classes

модуль semikron, igbt, мост диодный Минск +375447584780
www.fotorele.net www.tiristor.by радиодетали, электронные компоненты
email minsk17@tut.by tel.+375 29 758 47 80 мтс

Мы не работаем с частными (физическими) лицами.
Мы работаем только с юридическими лицами(организациями) и ИП и только по безналичному расчёту.
каталог, описание, технические, характеристики, datasheet, параметры, маркировка,габариты, фото

КАТАЛОГ SEMIKRON 2017/2018 МИНСК

модуль semikron, igbt, мост диодный

купить, продажа

Mini SKiiP

SEMITOP

SEMITRANS

SEMIX

SKiM

Full SiC

Hybrid SiC

SKiiP

SEMIPACK

SEMITOP

SEMIX

SEMISTART

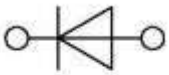

Power Bridge Rectifiers

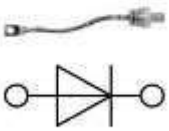

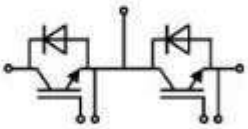

SEMISTACK Classics

SEMIPONT

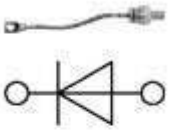

SEMITEACH

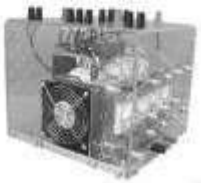

SEMIX

PT 22b3 RoHS

Pulse Transformer

Part Number: 97492890
Manufacturer: SEMIKRON
datasheet

Product Details >>

Current delivery time approx. 10 weeks

Axial fan 230V 119x38m 150m3/h

Fan

V 230 V

Part Number: 30031061
Manufacturer: SEMIKRON
datasheet

Thermal paste P12

Thermal paste

Part Number: 31867700
Manufacturer: SEMIKRON
datasheet