CoolSiC™ – Revolution to rely on

SiC solutions enabling radical new product designs
with best system cost-performance ratio

www.infineon.com/coolsic

The future of power semiconductors

The use of SiC based power semiconductor solutions has shown a huge increase over the last years, it is a revolution to rely on. Driving forces behind this market development are the following trends: energy saving, size reduction, system integration and improved reliability.

The combination of a fast silicon based switch with a SiC diode – is often termed a “hybrid” solution. In recent years Infineon has manufactured several millions of hybrid modules and has seen them installed in various customer products.

The increase of switching frequency for a converter using SiC MOSFETs can result in dramatically reduced volume and weight of the magnetic components. From an analysis carried out by Infineon, a converter built on SiC devices is a third of the size and 25 percent of the weight compared to a current Si based reference solution. Thanks to the significant reduction in volume and weight, the system cost can also be reduced by more than 20 percent.

Over the next few years, SiC solutions will expand into other application fields such as industrial or traction drives. The reasons for this are the market forces pushing for loss reduction, not only for the sake of improved efficiency but also for smaller packages – resulting from reduced heat sink requirements. As shown in figure above, SiC is already being used for high end and niche solutions. Today’s designs use these benefits to reduce system cost in specific application areas.

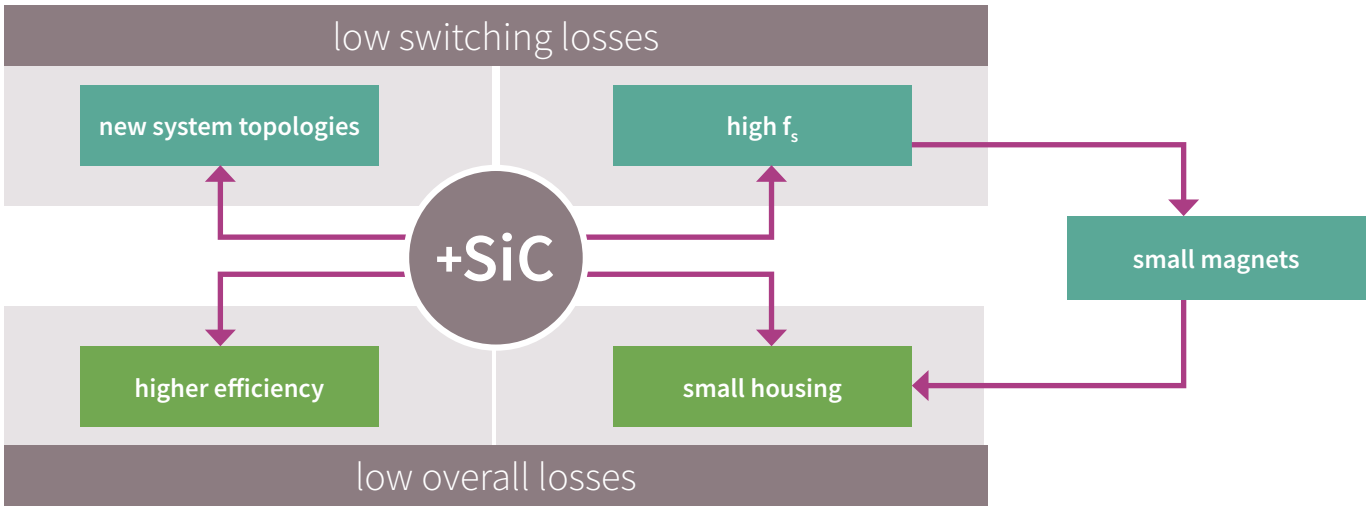

Infineon CoolSiC™ – Revolution to rely on

Infineon CoolSiC™ semiconductor solutions are the next essential step towards an energy-smart world. Being the #1 in power semiconductors, we have an extensive application know-how resulting in the right SiC product portfolio, enabling our customers to develop radical new product designs with best system cost-performance ratio. Based on proven, high quality volume manufacturing, Infineon CoolSiC™ solutions combine revolutionary technology with benchmark reliability – making our customers successful today and tomorrow.

Extensive system expertise

- Extensive application system understanding
- Focus on system cost-performance ratio
- System-relevant complementing products as gate driver ICs
- Global application design support

Unique power technology portfolio

- Pioneer in the commercial use of SiC technology (2001)
- MOSFETs in Trench Technology
- Expertise in all leading power technologies (Si, SiC, GaN, GaN-on-Si)
- Huge and substantial IP portfolio

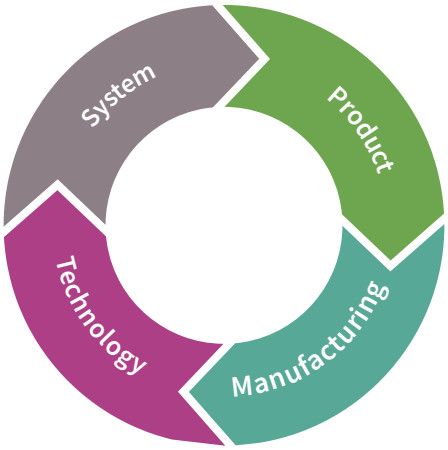

Application-dedicated products

- Most comprehensive power portfolio ensures always best-fit (Si and SiC)
- SiC product portfolio optimized for the specific application requirements
- SiC MOSFETs in Trench technology
- SiC chips are provided as bare dies in best-in-class packaging: discretes, modules

Benchmark in manufacturing

- Complete production on 6” SiC wafer
- Extreme high volume flexibility and reliability due to integration in the high volume silicon power manufacturing line
- Automotive qualified manufacturing process
- Multi million track record

Cool SiC™

Schottky Diodes

MOSFETs

CoolSiC™ MOSFET

Features
- Low device capacitances
- Temperature independent switching losses
- Intrinsic diode with low reverse recovery charge
- Threshold-free on-state characteristics

Advantages
- Superior gate oxide reliability
- Best in class switching and conduction losses
- IGBT compatible driving (+15 V)
- Threshold voltage, $V_{th} > 4$ V
- Short-circuit robustness

Benefits
- Highest efficiency for reduced cooling effort
- Longer lifetime and higher reliability
- Higher frequency operation
- Reduction in system cost
- Increased power density
- Reduced system complexity
- Ease of design and implementation

Applications
- Photo-Voltaic inverters (PV)
- Energy storage / Battery charging
- Un-interruptable Power Supplies (UPS)
- Switch Mode Power Supplies (SMPS)
- Industrial drives
- Medical

Based on volume experience and compatibility know-how, Infineon introduces the revolutionary CoolSiC™ MOSFET technology which enables radically new product designs. In comparison to traditional Si based switches like IGBTs and MOSFETs, the SiC MOSFET offers a series of advantages. These include, the lowest gate charge and device capacitances levels seen in 1200 V switches, no reverse recovery losses of the internal commutation proof body diode, temperature independent low switching losses and threshold-free on-state characteristics. CoolSiC™ MOSFET first products in 1200 V target photovoltaic inverters, battery charging and energy storage. CoolSiC™ MOSFET represents the best performance, reliability and ease of use for system designers to harness never before seen levels of efficiency and system flexibility.

CoolSiC™ MOSFET first products are targeted for photovoltaic inverters, battery charging and energy storage.

TO-247-4pin package contains an additional connection to the source (Kelvin connection) that is used as a reference potential for the gate driving voltage, thereby eliminating the effect of voltage drops over the source inductance. The result is even lower switching losses than for TO247-3pin version, especially at higher currents and higher switching frequencies. Easy1B modules offer a very good thermal interface, a low stray inductance and robust design as well as PressFIT connections.

The products portfolio will be extended within the next years. The first step is a roll-out of different topologies like Sixpack and Halfbridge covering a power range from 2kW until 200kW.

Lead products

Schematic	Type	R_{DSON}	V_{DS}	Package
Single switch 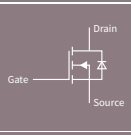	IMW120R045M1	45 mΩ	1200 V	TO-247-3pin 
Single switch 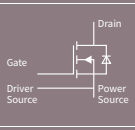	IMZ120R045M1	45 mΩ	1200 V	TO-247-4pin 
Booster with NTC 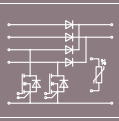	DF11MR12W1M1_B11	11 mΩ	1200 V	Easy 1B 
	DF23MR12W1M1_B11	23 mΩ	1200 V	
Half bridge with NTC 	FF11MR12W1M1_B11	11 mΩ	1200 V	
	FF23MR12W1M1_B11	23 mΩ	1200 V	

Samples available

Roll-out products phase 1

Schematic	Type	R_{DSON}	V_{DS}	Package
SixPACK with NTC 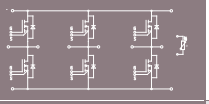	FS45MR12W1M1_B11	45 mΩ	1200 V	Easy 1B 
Half bridge with NTC 	FF8MR12W2M1_B11	8 mΩ	1200 V	Easy 2B 
Half bridge 	FF6MR12KM1	6 mΩ	1200 V	62 mm 

Selectively sampling in 2017

1EDI EiceDRIVER™ Compact

Gate driver ICs with perfect fit to CoolSiC™ MOSFET

Perfect fit to CoolSiC™ MOSFET

Ultra-fast switching 1200 V power transistors such as CoolSiC™ MOSFETs can be easier handled by means of isolated gate output sections. Therefore, the following galvanically isolated gate driver ICs based on Infineon's coreless transformer technology are recommended as most suitable. The drivers incorporate most important key features and parameters for SiC MOSFET driving such as tight propagation delay matching, precise input filters, wide output side supply range, negative gate voltage capability, and extended CMTI capability.

Recommended gate drivers

Product	Part number	Typ. peak drive current	VCC2-VEE2	Typ. prop. delay	Typ. UVLO ON	Typ. UVLO OFF	Miller clamp	Other key features	Package
1EDI compact isolated high-side driver family	1EDI20N12AF	3.5 A	40.0 V	≤ 120 ns	9.1 V	8.5 V	No	Functional isolation	DSO-8 150 mil 
	1EDI60N12AF	9.4 A	40.0 V	≤ 120 ns	9.1 V	8.5 V	No		
	1EDI20I12MF	3.5 A	20.0 V	≤ 300 ns	11.9 V	11.0 V	Yes		
	1EDI20H12AH	3.5 A	40.0 V	≤ 125 ns	12.0 V	11.1 V	No	8 mm creepage clearance	DSO-8 300 mil 
	1EDI60H12AH	9.4 A	40.0 V	≤ 125 ns	12.0 V	11.1 V	No		
	1EDI20I12MH	3.5 A	20.0 V	≤ 300 ns	11.9 V	11.0 V	Yes		
1ED-F2 isolated high-side driver with integrated protection	1ED020I12-F2	2.0 A	28.0 V	≤ 170 ns	12.0 V	11.0 V	Yes	Short circuit clamping; DESAT protection; active shutdown	DSO-16 
2ED-F2 isolated dual high-side driver with integrated protection	2ED020I12-F2	2.0 A	28.0 V	≤ 170 ns	12.0 V	11.0 V	Yes	Short circuit clamping; DESAT protection; active shutdown	DSO-36 
1ED slew rate control (SRC) isolated high-side driver	1EDI20I12SV	2.0 A	28.0 V	≤ 485 ns	11.9 V	11.0 V	Yes	Real-time adjustable gate current control; over-current protection, soft turn-off shut down, two-level turn-off	DSO-36 

CoolSiC™ MOSFET

Naming system

Discrete Silicon Carbide MOSFETs

I	M	W	120	R	45	M1	

Company
I = Infineon

Device
M = MOSFET

Package type
(max. 2 digits)
W = TO247-3
Z = TO247-4

Breakdown voltage
Divided by 10
120 = 1200 V

Reliable grade
blank = Industrial
A = Automotive
S = Standard

Series name (2 digits)
M1 = SiC MOSFET first generation

$R_{DS(on)}$ [mΩ]

R = $R_{DS(on)}$
As a seperator between voltage und $R_{DS(on)}$

Module solutions with Silicon Carbide MOSFETs

New!

FF	11	MR	12	W1	M1	_B11

Topology
FF = Halfbride
DF = Chopper module

$R_{DS(on)}$ [mΩ]

Scale unit $R_{DS(on)}$
M = mΩ

Breakdown voltage
Devided by 100
12 = 1200 V

Constructrion variant
B11 = PressFIT

Series name (2 digits)
M1 = SiC MOSFET first generation

Package type (max. 2 digits)
W1 = Easy1B
W2 = Easy2B

New! CoolSiC™ MOSFET modules are marked with the typical $R_{DS(on)}$ instead of nominal current.

CoolSiC™ Schottky diodes G5

The differences in material properties between Silicon Carbide and Silicon limit the fabrication of practical Silicon unipolar diodes (Schottky diodes) to a range up to 100 V–150 V, with relatively high on-state resistance and leakage current. In SiC material Schottky diodes can reach a much higher breakdown voltage. Up to 1200 V as discrete products and up to 1700 V in modules is offered by Infineon. The fast switching characteristics of SiC Schottky diodes provide clear efficiency improvements at system level. The performance gap between SiC and high-end Si diodes increases with the operating frequency.

Features
- No reverse recovery charge
- Purely capacitive switching
- High operating temperature

Advantages
- Low turn-off loss
- Reduction of CoolMOS™ or IGBT turn-on loss
- Switching loss independent from load current, switching speed and temperature

Benefits
- System efficiency improvement
- Reduced cooling requirements
- Enabling higher frequency/increased power density
- Higher system reliability
- Reduced EMI

Applications
- Photo-Voltaic inverters (PV)
- Switch Mode Power Supplies (SMPS)
- Energy storage / Battery charging
- Un-interruptable Power Supplies (UPS)
- Lighting
- Medical
- Welding

Excellent efficiency and surge current capability

SiC Schottky Diode generation 5 offers the optimum efficiency and ruggedness. Lower V_F means lower conduction loss and lower Q_c means lower switching loss. Q_c x V_F is the figure of merit for efficiency and comparison indicates that generation 5 matches the best competitors on the market. In addition, SiC generation 5 offers a surge current robustness far better than that offered by the most efficient products. Thus, under abnormal conditions this surge current capability offers excellent device robustness. All around, SiC generation 5 offers excellent efficiency and surge current capability at the same time. No other SiC diode product on the market offers such good balance between efficiency and surge current capability. Some vendors offer better efficiency but weak surge current, while others offer better surge current but are less attractive in efficiency.

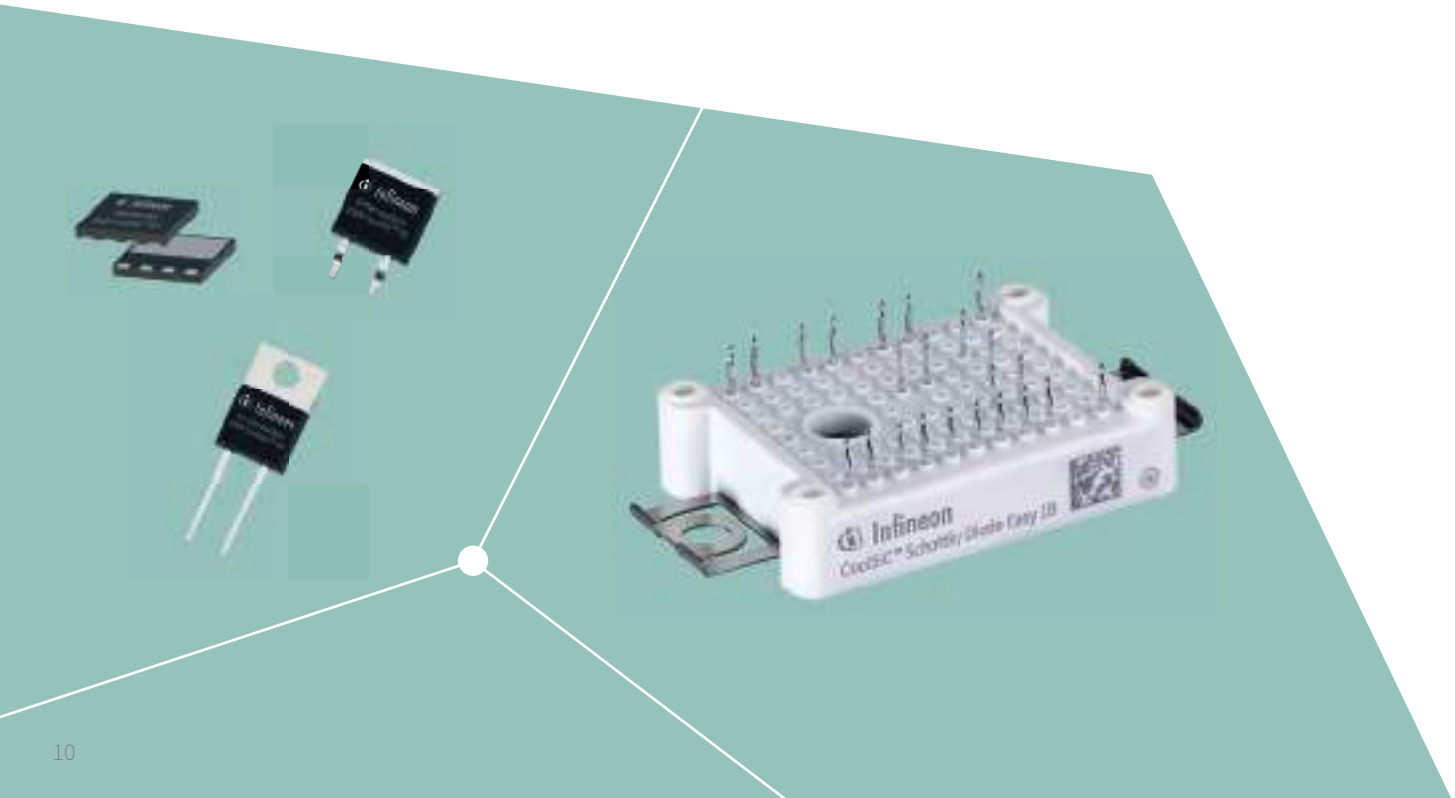

CoolSiC™ Schottky diodes G5: best price/ performance

This product family has been optimized from all key aspects including junction structure, substrate and die attach. It represents a well-balanced product family which offers state of the art performance and high surge current capability at competitive cost level.

Innovation: optimized junction, substrate and die attach
Infineon SiC Schottky Diode generation 5 is optimized with regard to all key aspects relevant for high power and high efficiency SMPS applications.

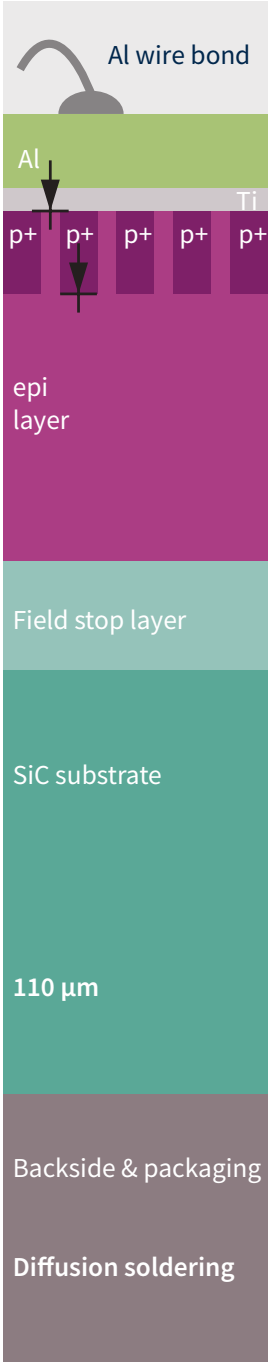

Junction: merged PN structure
On the junction level, it has an optimized merged PN structure. Compared to competitors, Infineon's SiC diode has additional P doped area, together with the N doped EPI layer, it forms a PN junction diode. Thus it is a combination of Schottky diode and PN junction diode. Under normal conditions it works like a standard Schottky diode. Under abnormal conditions such as lighting, AC line drop-out, it works like a PN junction diode. At high current level, the PN junction diode has significantly lower V_F than Schottky diode, this leads to less power dissipation, thus significantly improving the surge current capability.

Substrate: thin wafer technology
On the substrate level, Infineon introduced thin wafer technology, at the later stage of our SiC diode production thin wafer process is used to reduce the wafer thickness by about 2/3, this significantly reduces the substrate resistance contribution thus improve both V_F and thermal performance.

Die attach: diffusion soldering
On the backside, package level diffusion soldering is introduced, which significantly improves the thermal path between lead frame and the diode, enhancing the thermal performance. With the same chip size and power dissipation, the junction temperature is reduced by 30°C.

CoolSiC™ Schottky diodes G5

Naming System

I D H X G X C 5 B

Company
I = Infineon

Device
D = Diode

Package type
H = TO-220 real 2 pin
W = TO-247
K = D²PAK R2L
L = ThinPAK 8x8
M = DPAK R2L

Continuous forward current
[A]

B = Common-cathode configuration

Series name
5 = Generation 5

Specifications
C = Surge current stable

Breakdown voltage
65 = 650 V
120 = 1200 V

G = Low thermal resistance

650 V generation 5

I_F [A]	TO-220 R2L	TO-247 Dual Die	TO-247	D²PAK R2L	ThinPAK 8x8
2	IDH02G65C5			IDK02G65C5	IDL02G65C5
3	IDH03G65C5			IDK03G65C5	
4	IDH04G65C5			IDK04G65C5	IDL04G65C5
5	IDH05G65C5			IDK05G65C5	
6	IDH06G65C5			IDK06G65C5	IDL06G65C5
8	IDH08G65C5			IDK08G65C5	IDL08G65C5
9	IDH09G65C5			IDK09G65C5	
10	IDH10G65C5		IDW10G65C5	IDK10G65C5	IDL10G65C5
12	IDH12G65C5		IDW12G65C5	IDK12G65C5	IDL12G65C5
16	IDH16G65C5		IDW16G65C5		
20	IDH20G65C5	IDW20G65C5B	IDW20G65C5		
24		IDW24G65C5B			
30/32		IDW32G65C5B	IDW30G65C5		
40		IDW40G65C5B	IDW40G65C5		

1200 V generation 5

I_F [A]	TO-220 R2L	TO-247 Dual Die	TO-247	TO220-2 R2L	DPAK R2L
2				IDH02G120C5	IDM02G120C5
5				IDH05G120C5	IDM05G120C5
8				IDH08G120C5	IDM08G120C5
10		IDW10G120C5B		IDH10G120C5	IDM10G120C5
15/16		IDW15G120C5B		IDH16G120C5	
20		IDW20G120C5B		IDH20G120C5	
30		IDW30G120C5B			
40		IDW40G120C5B			

„B“ refers to common-cathode configuration

Bridge rectifier & AC-switches

Type	V_{DRM} / $V_{RRM\ (V)}$ [V]	I_{RMSM} [A]	$I_{(FSM)}$ max [A]	Housing	Configuration
Diode Bridges with Brake Chopper and NTC					
DDB2U50N08W1R_B23 +SiC	800.0 V	50.0 A	450.0 A	Easy1B	

EASY Solar/High Efficiency Line 650 V_{CES}

Type	V_{CE} V	I_C* A T_C = 80°C	I_C A T_C = 25°C	V_{CEsat} V T_{vj} = 25°C	Eon+ $E_{off,\ mJ}$ T_{vj} = 125°C
TRENCHSTOP™ IGBT 3 H3					
F4-75R07W2H3_B51 +SiC	650	75	75	1.35	2.50

fourpack with booster and NTC

EASY Solar/UPS-High Efficiency Line 650 V_{CES}

Type	IGBT Inverter				IGBT 3-Level			
	V_{CE} V	I_C* A T_C = 80°C	V_{CEsat} V T_{vj} = 25°C	Eon+ $E_{off,\ mJ}$ T_{vj} = 125°C	V_{CE} V	I_C* A T_C = 80°C	V_{CEsat} V T_{vj} = 25°C	Eon+ $E_{off,\ mJ}$ T_{vj} = 125°C
TRENCHSTOP™ IGBT 3 H3								
FS3L30R07W2H3F_B11 +SiC	650	30	1.50	1.94	650	30	1.55	1.04
FS3L50R07W2H3F_B11 +SiC	650	50	1.45	2.80	650	30	1.55	1.08

3ph 3-Level NPC1 with NTC

EASY Solar/UPS-High Efficiency Line 650 V_{CES} and 1200 V_{CES}

Type	V_{CE} V	$I_{c\ nom}$* A	V_{CEsat} V Tvj=25°C	E_{on} + E_{off} mJ Tvj=125°C
TRENCHSTOP™ IGBT 2 H4				
DF75R12W1H4F_B11 +SiC	1200	25 A (T_H 75°C)	2.10	2.35
TRENCHSTOP™ IGBT 3 H3				
DF80R12W2H3F_B11 +SiC	1200	20 A (T_H 100°C)	1.55	1.52
DF160R12W2H3F_B11 +SiC	1200	20 A (T_H 100°C)	1.55	1.52
DF200R12W1H3F_B11 +SiC	1200	20 A (T_H 100°C)	1.30	2.78
TRENCHSTOP™ 5 H5				
DF100R07W1H5FP_B11 +SiC	650	25 A (T_H 100°C)	1.35	0.40

Booster with NTC

PrimePACK™ 1200 V_{CES}

Type	V_{CES} [V]	I_C [A]	V_{CEsat} [V] T_{vj} = 25°C typ.	E_{on}/E_{off} [mWs] T_{vj}=125°C typ.
IGBT2 fast				
FF600R12IS4F +SiC	1200	600	3.20	20/40

halfbridge with NTC

* as specified in data sheet

SiC at Infineon

More than 15 years of field experience

Infineon is a pioneer in the commercial use of this technology. As the first company worldwide SiC based diodes were introduced in the market in 2001 already, followed by the worldwide first commercial power modules containing SiC components in 2006. Meanwhile the 5th generation of such parts is available as discrete devices.

In power modules Infineon offers solutions based or empowered by SiC mainly for solar applications and selected motor drive applications . The product design was strongly oriented on a careful cost performance evaluation in order to use the new technology in systems and circuits where a tangible system advantage could be identified.

+SiC

1992
Start of power device development, SiC diodes and transistors for high power industrial applications

1998
Start of 2” wafer technology integration in the high volume silicon power manufacturing line of Infineon

2006
Release of the first power modules with SiC devices inside for industrial motor drive applications (hybrid modules)

2008
Release of 3rd diode generation with improved thermal properties

2009
Release of first high power module with SiC Diodes

2007
Move to 3” wafer production

2006
Release of 2nd generation diodes based on Infineon’s unique MPS principle

2001
Worldwide first release of commercial SiC power devices

2012
Roll out of SiC portfolio for solar power string inverters

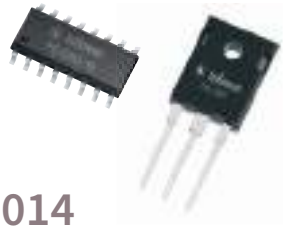

2014
Commercial release of Infineon's ultra reliable SiC JFET switch

2014
Extension of the 5th generation principle towards 1200 V diodes

2017
Commercial release of CoolSiC™ MOSFET lead products in power modules and discrete versions

2010
Move to 100 mm 4" wafer diameter

2013
Release of 5th generation of diodes, introduction of thin wafer manufacturing for SiC

2015
Start of 150 mm conversion in manufacturing

2016
Technology launch of CoolSiC™ MOSFET at the PCIM in Nuremberg

Where to buy

Infineon distribution partners and sales offices:
www.infineon.com/WhereToBuy

Service hotline

Infineon offers its toll-free 0800/4001 service hotline as one central number, available 24/7 in English, Mandarin and German.

- Germany ..... 0800 951 951 951 (German/English)
- China, mainland ..... 4001 200 951 (Mandarin/English)
- India ..... 000 800 4402 951 (English)
- USA ..... 1-866 951 9519 (English/German)
- Other countries ..... 00* 800 951 951 951 (English/German)
- Direct access ..... +49 89 234-0 (interconnection fee, German/English)

* Please note: Some countries may require you to dial a code other than "00" to access this international number.
Please visit www.infineon.com/service for your country!

www.infineon.com

Published by
Infineon Technologies AG
81726 Munich, Germany

Order Number: B133-I0287-V2-7600-EU-EC-P
Date: 05 / 2017

Please note!
THIS DOCUMENT IS FOR INFORMATION PURPOSES ONLY AND ANY INFORMATION GIVEN HEREIN SHALL IN NO EVENT BE REGARDED AS A WARRANTY, GUARANTEE OR DESCRIPTION OF ANY FUNCTIONALITY, CONDITIONS AND/OR QUALITY OF OUR PRODUCTS OR ANY SUITABILITY FOR A PARTICULAR PURPOSE. WITH REGARD TO THE TECHNICAL SPECIFICATIONS OF OUR PRODUCTS, WE KINDLY ASK YOU TO REFER TO THE RELEVANT PRODUCT DATA SHEETS PROVIDED BY US. OUR CUSTOMERS AND THEIR TECHNICAL DEPARTMENTS ARE REQUIRED TO EVALUATE THE SUITABILITY OF OUR PRODUCTS FOR THE INTENDED APPLICATION.

WE RESERVE THE RIGHT TO CHANGE THIS DOCUMENT AND/OR THE INFORMATION GIVEN HEREIN AT ANY TIME.

Additional information
For further information on technologies, our products, the application of our products, delivery terms and conditions and/or prices, please contact your nearest Infineon Technologies office (www.infineon.com).

Warnings
Due to technical requirements, our products may contain dangerous substances. For information on the types in question, please contact your nearest Infineon Technologies office.

Except as otherwise explicitly approved by us in a written document signed by authorized representatives of Infineon Technologies, our products may not be used in any life-endangering applications, including but not limited to medical, nuclear, military, life-critical or any other applications where a failure of the product or any consequences of the use thereof can result in personal injury.

Selection Guide

TRENCHSTOP™ 5 Selection Guide

Product family	Value	Industrial applications focus	Applications
TRENCHSTOP™ 5 L5	**Best-in-class low $V_{CE(sat)}$ IGBT** › Low $V_{CE(sat)}$ – 1.05 V at 25°C › Best trade-off $V_{CE(sat)}$ versus E_{ts} for frequencies below 20 kHz › High thermal stability of electrical parameters	› Ultra-low frequency converters › 3-level inverter type I NPC 1 and NPC 2 › Modified HERIC inverter › AC output (Aluminum/Magnesium welding)	Solar, Welding, UPS
TRENCHSTOP™ 5 S5	**Best-in-class ease of use IGBT** › Low $V_{CE(sat)}$ of 1.35 V at 25°C › Soft current fall characteristic with no tail current, low EMI › Allows to reduce circuit complexity – single R_G, no Zener diode, no gate capacitor, no snubber capacitor	› Medium frequency converters › Multilevel inverter stages › Output stages › PFC	Solar, Welding, UPS, Storage
TRENCHSTOP™ 5 H5/F5	**Best-in-class high frequency IGBT** › Cross over to SuperJunction MOSFETs › Highest efficiency, especially under light load conditions › Lowest switching losses in low strayinductance environment	› High frequency converters › Multilevel inverter stages › Output stages › PFC and battery charger	Solar, Welding, UPS, Charger
TRENCHSTOP™ 5 WR5	**Price optimized, application specific IGBT for resonant topologies** **Zero Current Switching (ZCS)** › Optimized full rated hard switching turn-off typically found in welding › Excellent R_G controllability › Soft recovery plus low Q_{rr} for diode	› Medium frequency converters › Zero current switching › PFC	Welding, PFC

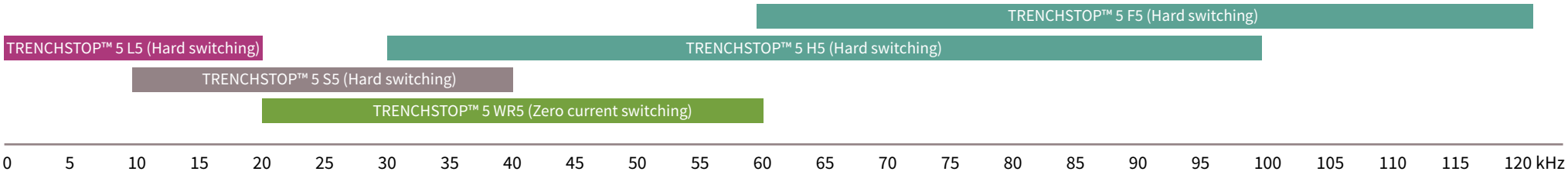

www.infineon.com/trenchstop5

TRENCHSTOP™ 5 Selection Guide

Selection tree

650 V

Free Wheeling Diode (FWD)

No

50 Hz – 20 kHz low speed	30 kHz – 120 kHz high speed
low $V_{CE(sat)}$ TRENCHSTOP™ 5 (L5)	TRENCHSTOP™ 5 (H5/F5/S5)
Corresponding best fit IGBT	
IGW30N65L5	IGP20N65H5/F5 IGP30N65H5/F5 IGP40N65H5/F5 IGW30N65H5/F5 IGW40N65H5/F5 IGW50N65H5/F5 IGZ50N65H5 IGZ75N65H5 IGZ100N65H5 NEW! IGB15N65S5 IGB20N65S5 IGB50N65S5 IGB50N65H5

Yes

50 Hz – 20 kHz low speed	> 20 kHz – 60 kHz high speed	10 kHz – 40 kHz high speed	30 kHz – 100 kHz high speed	60 kHz – 120 kHz ultra-high speed
low $V_{CE(sat)}$ TRENCHSTOP™ 5 (L5)	RC TRENCHSTOP™ 5 (WR5)	„Soft“ TRENCHSTOP™ 5 (S5)	TRENCHSTOP™ 5 (H5)	TRENCHSTOP™ 5 (F5)
Corresponding best fit IGBT				
IKW30N65EL5 IKW30N65NL5 IKW75N65EL5 IKZ75N65EL5	IKW30N65WR5 IKW40N65WR5 IKW50N65WR5	IKW30N65ES5 IKW40N65ES5 IKW50N65ES5 IKW75N65ES5 IKZ50N65ES5 IKZ75N65ES5 NEW! IKB30N65ES5 IKB40N65ES5	IKP08N65H5 IKP15N65H5 IKP20N65H5 IKP30N65H5 IKP40N65H5 IKW30N65H5 IKW40N65H5 IKW50N65H5 IKW50N65EH5 IKW75N65EH5 IKZ50N65EH5 IKZ50N65NH5 IKZ75N65EH5 IKZ75N65NH5 NEW! IKB15N65EH5 IKB20N65EH5 IKB30N65EH5 IKB40N65EH5 IKA08N65H5 IKA15N65H5	IKP08N65F5 IKP15N65F5 IKP20N65F5 IKP30N65F5 IKP40N65F5 IKA08N65F5 IKA15N65F5 IKW30N65F5 IKW40N65F5 IKW50N65F5 NEW! IKB40N65EF5
Solar, Welding, UPS	Welding, PFC	Solar, Welding, UPS, Storage	Solar, Welding, UPS, Charger	Solar, Welding, UPS, Charger

Published by
Infineon Technologies Austria AG
9500 Villach, Austria

Order Number: B133-I0529-V1-7600-EU-EC
Date: 5 / 2018

Additional information
For further information on technologies, our products, the application of our products, delivery terms and conditions and/or prices, please contact your nearest Infineon Technologies office (www.infineon.com).

Warnings
Due to technical requirements, our products may contain dangerous substances. For information on the types in question, please contact your nearest Infineon Technologies office.

Except as otherwise explicitly approved by us in a written document signed by authorized representatives of Infineon Technologies, our products may not be used in any life-endangering applications, including but not limited to medical, nuclear, military, life-critical or any other applications where a failure of the product or any consequences of the use thereof can result in personal injury.

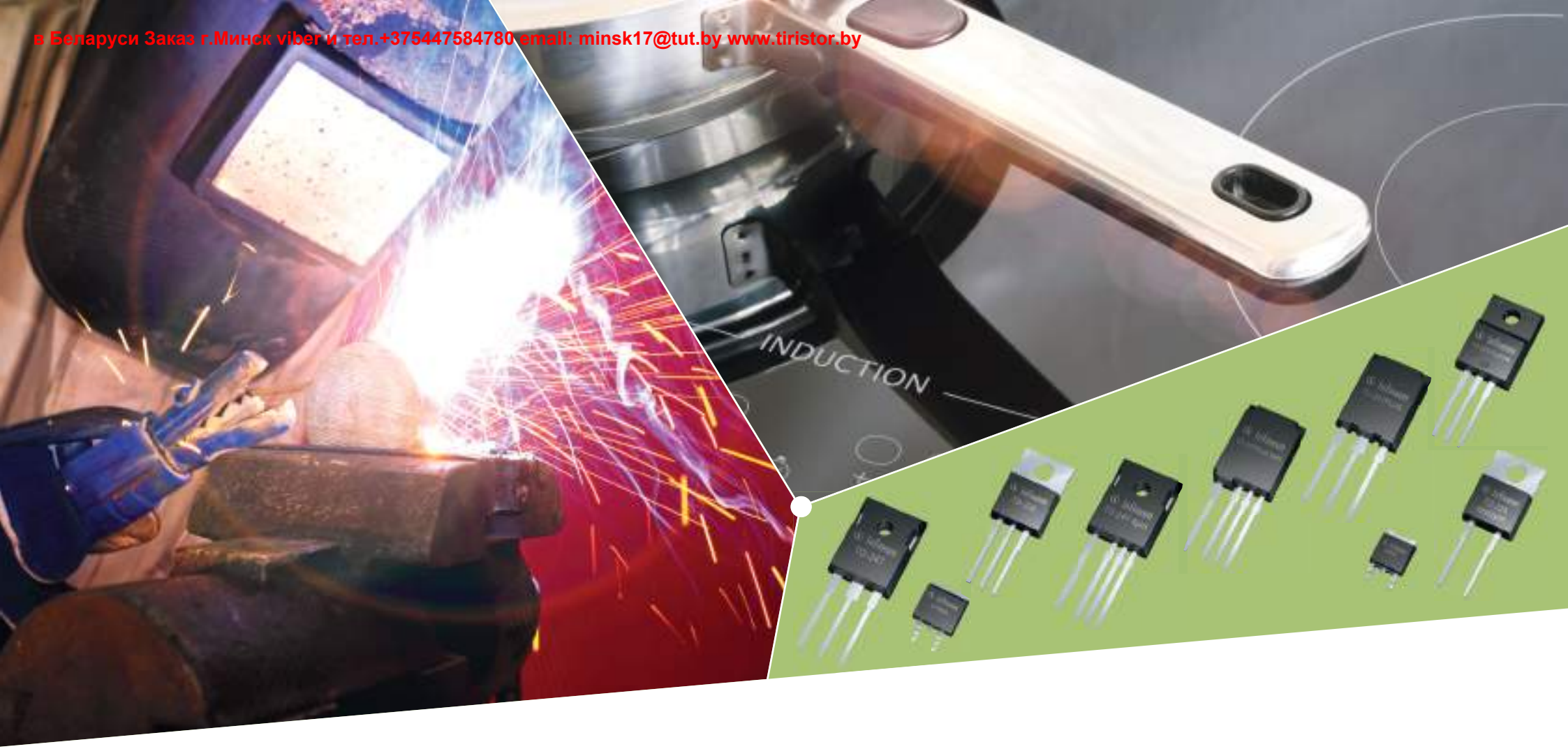

IGBT Selection Guide

Common IGBT applications and topologies

www.infineon.com/igbt

IGBT selection tree

Nomenclature: IGBT
IKpccNvvvdH3 – IGBT + diode
IGpccNvvvH3 – Single IGBT
p = package
c = current
v = voltage
d = diode

IGBT

Diode commutation

Soft

Hard/no diode for IG** parts

Frequency range								
8 kHz – 60 kHz	2 kHz – 40 kHz			10 kHz – 40 kHz medium speed	> 18 kHz – 60 kHz high speed	10 kHz – 100 kHz high speed	> 18 kHz – 60 kHz high speed	50 Hz – 20 kHz low speed
RC series (monolythic)	RC-Drives (monolythic)	TRENCHSTOP™ / TRENCHSTOP™ Performance	TRENCHSTOP™ IGBT6 NEW!	Soft turn-off TRENCHSTOP™ 5 (S5)	HighSpeed 3 (H3)	TRENCHSTOP™ 5 H5/F5	RC TRENCHSTOP™ 5 (WR5)	Low $V_{CE(sat)}$ TRENCHSTOP™ 5 (L5)
Voltage range								
600 V, 650 V, 1100 V, 1200 V, 1350 V, 1600 V	600 V	600 V, 1200 V	650 V, 1200 V	650 V	600 V, 1200 V	650 V	650 V	650 V
Part number								
IHpccNvvvR2 IHpccNvvvR3 IHpccN60R/RF IHpccNvvvR5 IHpccNvvvE1 NEW!	IKpccN60R IKpccN60RF	IKpccN60T IKpccN60TP IKpccN120T2 IKpccN120CT2 IGpccN60T IGpccN60dTP IGpccT120 IGpccN120T2	IKpccN65dT6 IKpccN120BH6 IKpccN120CS6	IKpccN65dS5	IKpccN60H3 IKpccN120H3 IKpccN120CH3 IGpccN60H3 IGpccN120H3	IKpccN65H5 IKpccN65F5 IGpccN65H5 IGpccN65F5	IKpccN65dR5	IKpccN65dL5 IGpccN65L5
Applications								
Induction cooking **Microwave** **Multifunction printers** **Half-bridge resonant** **(Current resonance > 650 V)** **Single switch** **(Voltage resonance > 650 V)**	Conduction loss optimized **Solar inverter** **Asymmetrical bridge** Symmetrical full-bridge 3-level type I or 3-level type II converter **Motor control** Three-phase inverter Full-bridge inverter **Uninterruptable power supply** UPS bridge 3-level type II converter **Major home appliances** Symmetrical full-bridge			**UPS** **Energy storage** **Battery charger** **Welding** **Solar Inverter**	**PFC** **Battery charger** **Welding** **UPS** **Solar** **Energy storage** **SMPS** **Air conditioning** **HVDC (Telecom/data centers)**		**PFC** **Welding inverter** Full-brigde Half-bridge Two transistor forward	**UPS** 3-level NPC1 and NPC2 topology, inner switches **Solar** 3-level NPC1 and NPC2 topology, inner switches **Welding** AC output (Al/Mag welding)

Common IGBT applications and topologies

Full-bridge/two transistor forward: welding inverter

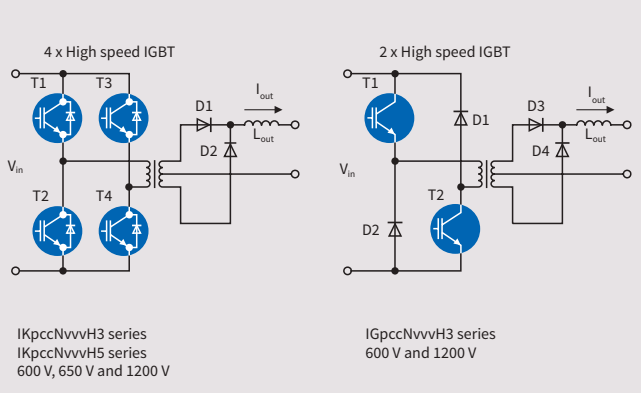

Half-bridge: induction heating inverter (current resonance)

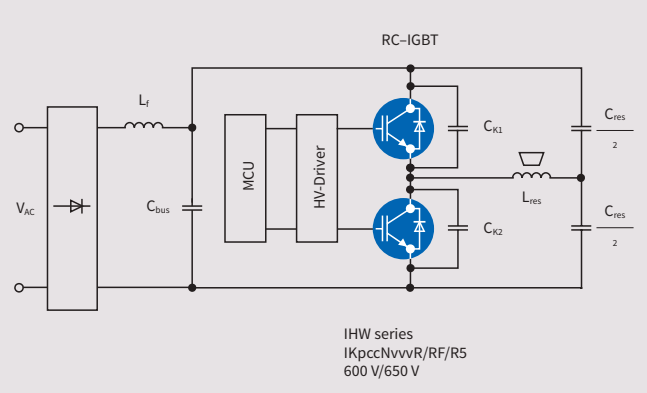

Single switch: induction heating inverter (voltage resonance)

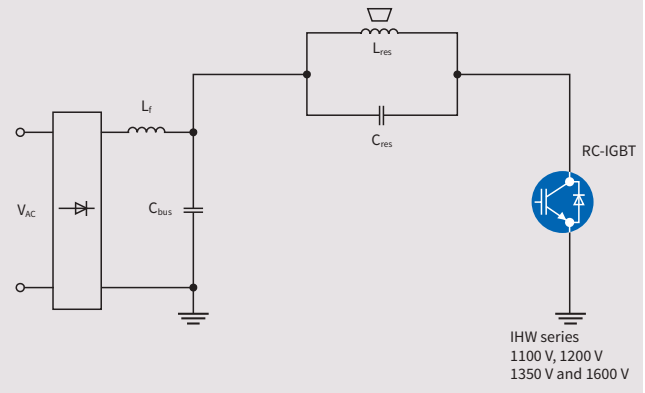

Asymmetrical full-bridge: solar inverter (phase-shift / asymmetrical full-bridge)

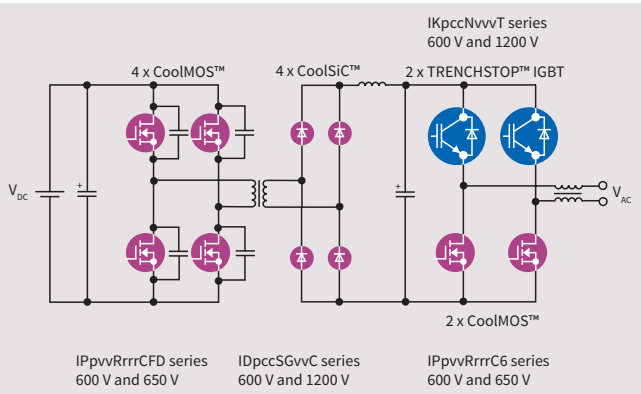

Symmetrical full-bridge: solar inverter (symmetrical full-bridge)

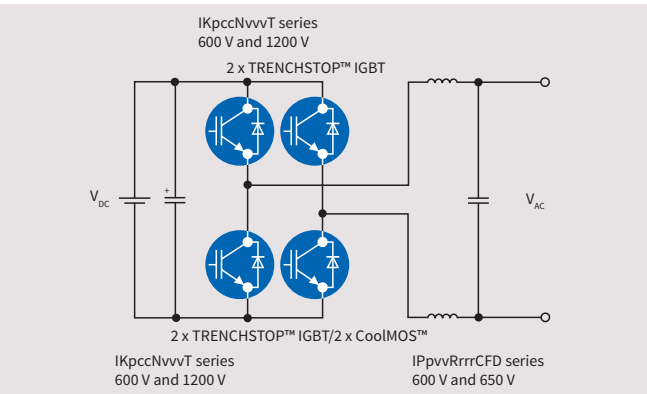

Three level inverter type II: 3-level inverter type II (Solar. UPS)

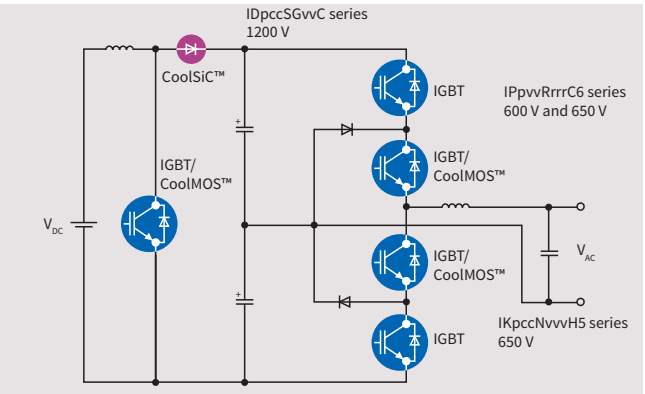

Motor control: three-phase motor control

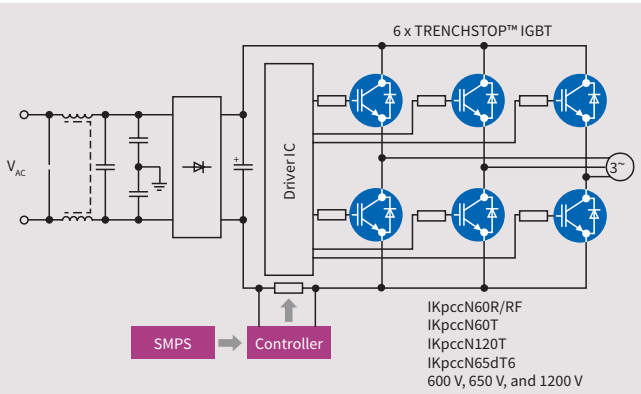

Uninterruptable power supply: universal power supply b6-bridge

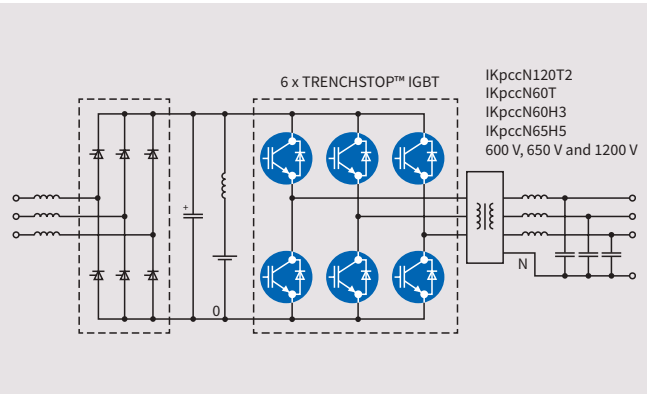

Nomenclature: IGBT
IKpccNvvvdH3
p = package
c = current
v = voltage
d = diode

Nomenclature: MOSFET
IPpvvRrrrCFD
p = package
c = current
r = resistance

IGBT parts
Other Infineon parts

www.infineon.com/igbt
www.infineon.com/coolmos
www.infineon.com/sic

Discrete IGBT with anti-parallel diode

Product type	$V_{CE(max)}$ [V]	Diode	Switching frequency [kHz]	Package	Switching Hard/Soft	Series	$I_{C(max)}$ @ 100° [A]	$V_{CE(sat)}$ (typ.) @ 25° [V]	E_{off} (typ.) @ 25° [mJ]	E_{on}(typ.) @ 25° [mJ]	Q_{rr} (typ.) @ 25° [mC]
IKB20N60H3	600	Y	20 – 100	D2PAK (TO-263)	Hard	HighSpeed 3	20	1,95	0,24	0,45	390
IKP20N60H3	600	Y	20 – 100	TO-220	Hard	HighSpeed 3	20	1,95	0,24	0,45	390
IKW20N60H3	600	Y	20 – 100	TO-247	Hard	HighSpeed 3	20	1,95	0,24	0,56	390
IKW30N60H3	600	Y	20 – 100	TO-247	Hard	HighSpeed 3	30	1,95	0,44	0,94	320
IKW40N60H3	600	Y	20 – 100	TO-247	Hard	HighSpeed 3	40	1,95	0,58	1,10	810
IKW50N60H3	600	Y	20 – 100	TO-247	Hard	HighSpeed 3	50	1,85	0,91	1,45	880
IKW60N60H3	600	Y	20 – 100	TO-247	Hard	HighSpeed 3	60	1,85	1,13	2,10	1200
IKW75N60H3	600	Y	20 – 100	TO-247	Hard	HighSpeed 3	75	1,85	1,70	3,00	1800
IKD04N60R	600	Y	2 – 20	DPAK (TO-252)	Hard	RC Drives	4	1,65	0,15	0,09	220
IKD06N60R	600	Y	2 – 20	DPAK (TO-252)	Hard	RC Drives	6	1,65	0,22	0,11	370
IKD10N60R	600	Y	2 – 20	DPAK (TO-252)	Hard	RC Drives	10	1,65	0,38	0,21	560
IKD15N60R	600	Y	2 – 20	DPAK (TO-252)	Hard	RC Drives	15	1,65	0,53	0,37	760
IKD03N60RF	600	Y	4 – 30	DPAK (TO-252)	Hard	RC Drives Fast	2,5	2,20	0,04	0,05	60
IKD04N60RF	600	Y	4 – 30	DPAK (TO-252)	Hard	RC Drives Fast	4	2,20	0,05	0,06	90
IKD06N60RF	600	Y	4 – 30	DPAK (TO-252)	Hard	RC Drives Fast	6	2,20	0,09	0,09	160
IKD10N60RF	600	Y	4 – 30	DPAK (TO-252)	Hard	RC Drives Fast	10	2,20	0,16	0,19	270
IKD15N60RF	600	Y	4 – 30	DPAK (TO-252)	Hard	RC Drives Fast	15	2,20	0,25	0,27	420
IHW40N60R	600	Y	8 – 60	TO-247	Soft	RC Soft Switching	40	1,65	0,75	-	-
IHW40N60RF	600	Y	20 – 100	TO-247	Soft	RC Soft Switching	40	1,85	0,56	-	-
IKB06N60T	600	Y	2 – 20	D2PAK (TO-263)	Hard	TRENCHSTOP™	6	1,50	0,11	0,09	190
IKB10N60T	600	Y	2 – 20	D2PAK (TO-263)	Hard	TRENCHSTOP™	18	1,50	0,27	0,16	380
IKB15N60T	600	Y	2 – 20	D2PAK (TO-263)	Hard	TRENCHSTOP™	23	1,50	0,35	0,22	240
IKB20N60T	600	Y	2 – 20	D2PAK (TO-263)	Hard	TRENCHSTOP™	15	1,50	0,46	0,31	310
IKA06N60T	600	Y	2 – 20	TO-220	Hard	TRENCHSTOP™	6,2	1,50	0,11	0,09	500
IKA10N60T	600	Y	2 – 20	TO-220	Hard	TRENCHSTOP™	7,2	1,50	0,27	0,16	380
IKA15N60T	600	Y	2 – 20	TO-220	Hard	TRENCHSTOP™	8,9	1,50	0,35	0,22	240
IKP04N60T	600	Y	2 – 20	TO-220	Hard	TRENCHSTOP™	4	1,50	0,08	0,06	79
IKP06N60T	600	Y	2 – 20	TO-220	Hard	TRENCHSTOP™	6	1,50	0,11	0,09	190
IKP10N60T	600	Y	2 – 20	TO-220	Hard	TRENCHSTOP™	18	1,50	0,27	0,16	380
IKP15N60T	600	Y	2 – 20	TO-220	Hard	TRENCHSTOP™	23	1,50	0,35	0,22	240
IKP20N60T	600	Y	2 – 20	TO-220	Hard	TRENCHSTOP™	28	1,50	0,46	0,31	310
IKW20N60T	600	Y	2 – 20	TO-247	Hard	TRENCHSTOP™	28	1,50	0,46	0,31	310
IKW30N60T	600	Y	2 – 20	TO-247	Hard	TRENCHSTOP™	39	1,50	1,10	1,00	920
IKW50N60T	600	Y	2 – 20	TO-247	Hard	TRENCHSTOP™	50	1,50	1,40	1,20	1800
IKW75N60T	600	Y	2 – 20	TO-247	Hard	TRENCHSTOP™	75	1,50	2,90	2,90	2400
IKQ100N60T	600	Y	2 – 20	TO-247PLUS-3	Hard	TRENCHSTOP™	100	1,50	2,50	3,10	2800
IKQ120N60T	600	Y	2 – 20	TO-247PLUS-3	Hard	TRENCHSTOP™	120	1,50	5,90	6,20	3400
IKW30N60DTP	600	Y	2 – 30	TO-247	Hard	TRENCHSTOP™ Perf.	38	1,60	0,74	0,99	1230
IKW40N60DTP	600	Y	2 – 30	TO-247	Hard	TRENCHSTOP™ Perf.	48	1,60	1,05	1,63	1520
IKW50N60DTP	600	Y	2 – 30	TO-247	Hard	TRENCHSTOP™ Perf.	61	1,60	1,39	2,25	2150
IKP08N65F5	650	Y	60 – 120	TO-220	Hard	TRENCHSTOP™ 5	11	1,60	0,02	0,07	140
IKP08N65H5	650	Y	30 – 100	TO-220	Hard	TRENCHSTOP™ 5	11	1,65	0,03	0,07	130
IKP15N65F5	650	Y	60 – 120	TO-220	Hard	TRENCHSTOP™ 5	18	1,60	0,04	0,13	190

Product type	$V_{CE(max)}$ [V]	Diode	Switching frequency [kHz]	Package	Switching Hard/Soft	Series	$I_{C(max)}$ @ 100° [A]	$V_{CE(sat)}$ (typ.) @ 25° [V]	E_{off} (typ.) @ 25° [mJ]	E_{on}(typ.) @ 25° [mJ]	Q_{rr} (typ.) @ 25° [mC]
IKP15N65H5	650	Y	30 – 100	TO-220	Hard	TRENCHSTOP™ 5	18	1,65	0,05	0,12	200
IKP20N65F5	650	Y	60 – 120	TO-220	Hard	TRENCHSTOP™ 5	21	1,60	0,06	0,16	280
IKP20N65H5	650	Y	30 – 100	TO-220	Hard	TRENCHSTOP™ 5	21	1,65	0,06	0,17	270
IKP30N65F5	650	Y	60 – 120	TO-220	Hard	TRENCHSTOP™ 5	35	1,60	0,07	0,28	410
IKP30N65H5	650	Y	30 – 100	TO-220	Hard	TRENCHSTOP™ 5	35	1,65	0,10	0,28	410
IKP40N65F5	650	Y	60 – 120	TO-220	Hard	TRENCHSTOP™ 5	46	1,60	0,10	0,36	450
IKP40N65H5	650	Y	30 – 100	TO-220	Hard	TRENCHSTOP™ 5	46	1,65	0,12	0,39	450
IKA08N65F5	650	Y	60 – 120	TO220-3 FP	Hard	TRENCHSTOP™ 5	6,8	1,60	0,02	0,07	140
IKA08N65H5	650	Y	30 – 100	TO220-3 FP	Hard	TRENCHSTOP™ 5	6,8	1,65	0,03	0,07	130
IKA15N65F5	650	Y	60 – 120	TO220-3 FP	Hard	TRENCHSTOP™ 5	8,5	1,60	0,04	0,13	190
IKA15N65H5	650	Y	30 – 100	TO220-3 FP	Hard	TRENCHSTOP™ 5	8,5	1,65	0,05	0,12	200
IHW20N65R5	650	Y	20 – 150	TO-247	Soft	TRENCHSTOP™ 5	20	1,35	0,16	0,54	1550
IHW30N65R5	650	Y	20 – 150	TO-247	Soft	TRENCHSTOP™ 5	30	1,35	0,24	0,85	1900
IHW40N65R5	650	Y	20 – 150	TO-247	Soft	TRENCHSTOP™ 5	40	1,35	0,37	1,10	2750
IHW50N65R5	650	Y	20 – 150	TO-247	Soft	TRENCHSTOP™ 5	50	1,35	0,45	1,50	2750
IKW30N65EL5	650	Y	50 Hz - 20 kHz	TO-247	Hard	TRENCHSTOP™ 5	62	1,05	1,35	0,47	910
IKW30N65H5	650	Y	30 – 100	TO-247	Hard	TRENCHSTOP™ 5	35	1,65	0,10	0,28	410
IKW30N65NL5	650	Y	50 Hz - 20 kHz	TO-247	Hard	TRENCHSTOP™ 5	62	1,05	1,35	0,56	480
IKW30N65WR5	650	Y	20 – 60	TO-247	Hard	TRENCHSTOP™ 5	30	1,40	0,33	0,99	1250
IKW40N65F5	650	Y	60 – 120	TO-247	Hard	TRENCHSTOP™ 5	46	1,60	0,10	0,36	450
IKW40N65H5	650	Y	30 – 100	TO-247	Hard	TRENCHSTOP™ 5	46	1,65	0,12	0,39	450
IKW40N65WR5	650	Y	20 – 60	TO-247	Hard	TRENCHSTOP™ 5	40	1,40	0,42	1,40	1650
IKW50N65EH5	650	Y	30 – 100	TO-247	Hard	TRENCHSTOP™ 5	50	1,65	0,50	1,50	1100
IKW50N65F5	650	Y	60 – 120	TO-247	Hard	TRENCHSTOP™ 5	56	1,60	0,16	0,49	550
IKW50N65H5	650	Y	30 – 100	TO-247	Hard	TRENCHSTOP™ 5	56	1,65	0,18	0,52	570
IKW50N65WR5	650	Y	20 – 60	TO-247	Hard	TRENCHSTOP™ 5	50	1,40	0,70	1,85	1800
IKW75N65EH5	650	Y	30 – 100	TO-247	Hard	TRENCHSTOP™ 5	75	1,65	0,90	2,30	1330
IKW75N65EL5	650	Y	50 Hz - 20 kHz	TO-247	Hard	TRENCHSTOP™ 5	80	1,10	3,20	1,61	1370
IKZ50N65ES5	650	Y	15 – 40	TO-247-4	Hard	TRENCHSTOP™ 5	60,5	1,35	0,88	0,77	1400
IKZ75N65ES5	650	Y	15 – 40	TO-247-4	Hard	TRENCHSTOP™ 5	80	1,42	1,30	1,50	1000
IKZ50N65EH5	650	Y	30 – 100	TO-247-4	Hard	TRENCHSTOP™ 5	54	1,65	0,19	0,41	820
IKZ50N65NH5	650	Y	30 – 100	TO-247-4	Hard	TRENCHSTOP™ 5	54	1,65	0,20	0,35	490
IKZ75N65EH5	650	Y	30 – 100	TO-247-4	Hard	TRENCHSTOP™ 5	75	1,65	0,43	0,68	1020
IKZ75N65EL5	650	Y	50 Hz - 20 kHz	TO-247-4	Hard	TRENCHSTOP™ 5	100	1,10	3,20	1,57	1300
IKZ75N65NH5	650	Y	30 – 100	TO-247-4	Hard	TRENCHSTOP™ 5	75	1,65	0,52	0,88	570
IKW30N65ES5	650	Y	10 – 30	TO-247	Hard	TRENCHSTOP™ 5	39,5	1,35	0,32	0,56	830
IKW40N65ES5	650	Y	10 – 30	TO-247	Hard	TRENCHSTOP™ 5	50	1,35	0,40	0,86	1100
IKW50N65ES5	650	Y	10 – 30	TO-247	Hard	TRENCHSTOP™ 5	60,5	1,35	0,55	1,23	1250
IKW75N65ES5	650	Y	10 – 30	TO-247	Hard	TRENCHSTOP™ 5	80	1,42	0,95	2,40	1800
IKA08N65ET6	650	Y	5 – 30	TO220-3 FP	Hard	TRENCHSTOP™ IGBT6	7	1,5	0,04	0,11	150
IKA10N65ET6	650	Y	5 – 30	TO220-3 FP	Hard	TRENCHSTOP™ IGBT6	9	1,5	0,07	0,20	210
IKA15N65ET6	650	Y	5 – 30	TO220-3 FP	Hard	TRENCHSTOP™ IGBT6	11	1,5	0,11	0,23	210
IHW30N110R3	1100	Y	8 – 60	TO-247	Soft	RC Soft Switching	30	1,55	1,15	-	-
IKW15N120H3	1200	Y	20 – 100	TO-247	Hard	HighSpeed 3	15	2,05	0,45	1,10	800
IKW15N120T2	1200	Y	2 – 20	TO-247	Hard	HighSpeed 3	15	2,20	1,30	1,50	1300

Product type	$V_{CE(max)}$ [V]	Diode	Switching frequency [kHz]	Package	Switching Hard/Soft	Series	$I_{C(max)}$ @ 100° [A]	$V_{CE(sat)}$ (typ.) @ 25° [V]	E_{off} (typ.) @ 25° [mJ]	E_{on}(typ.) @ 25° [mJ]	Q_{rr} (typ.) @ 25° [mC]
IKW25N120H3	1200	Y	20 – 100	TO-247	Hard	HighSpeed 3	25	2,05	0,85	1,80	1200
IKW40N120H3	1200	Y	20 – 100	TO-247	Hard	HighSpeed 3	40	2,05	1,20	3,20	1900
IKQ40N120CH3	1200	Y	18 – 60	TO-247PLUS-3	Hard	HighSpeed 3	40	2,00	1,30	3,30	3600
IKQ50N120CH3	1200	Y	18 – 60	TO-247PLUS-3	Hard	HighSpeed 3	50	2,00	1,90	3,00	3500
IKQ75N120CH3	1200	Y	18 – 60	TO-247PLUS-3	Hard	HighSpeed 3	75	2,00	2,80	6,40	5100
IKY40N120CH3	1200	Y	18 – 60	TO-247PLUS-4	Hard	HighSpeed 3	40	2,00	1,30	2,18	3000
IKY50N120CH3	1200	Y	18 – 60	TO-247PLUS-4	Hard	HighSpeed 3	50	2,00	1,90	2,30	3400
IKY75N120CH3	1200	Y	18 – 60	TO-247PLUS-4	Hard	HighSpeed 3	75	2,00	2,90	3,40	4900
IHW15N120E1	1200	Y	8 – 60	TO-247	Soft	RC Soft Switching	15	1,50	0.03 *	-	-
IHW15N120R3	1200	Y	8 – 60	TO-247	Soft	RC Soft Switching	15	1,48	0,70	-	-
IHW20N120R3	1200	Y	8 – 60	TO-247	Soft	RC Soft Switching	20	1,48	0,95	-	-
IHW20N120R5	1200	Y	8 – 60	TO-247	Soft	RC Soft Switching	20	1,55	0,75	-	-
IHW25N120E1	1200	Y	8 – 60	TO-247	Soft	RC Soft Switching	25	1,50	0.08 *	-	-
IHW25N120R2	1200	Y	8 – 60	TO-247	Soft	RC Soft Switching	25	1,60	2,54	-	-
IHW30N120R3	1200	Y	8 – 60	TO-247	Soft	RC Soft Switching	30	1,55	0.34 *	-	-
IHW40N120R3	1200	Y	8 – 60	TO-247	Soft	RC Soft Switching	40	1,55	0.48 *	-	-
IKW08T120	1200	Y	2 – 20	TO-247	Hard	TRENCHSTOP™	8	2,20	1,20	1,08	1000
IKW25T120	1200	Y	2 – 20	TO-247	Hard	TRENCHSTOP™	25	2,20	4,00	3,00	2300
IKW40T120	1200	Y	2 – 20	TO-247	Hard	TRENCHSTOP™	40	2,30	5,40	5,00	3800
IKW15T120	1200	Y	2 – 20	TO-247	Hard	TRENCHSTOP™ 2	15	2,20	2,10	2,00	1900
IKW25N120T2	1200	Y	2 – 20	TO-247	Hard	TRENCHSTOP™ 2	25	2,20	2,05	2,25	2050
IKW40N120T2	1200	Y	2 – 20	TO-247	Hard	TRENCHSTOP™ 2	40	2,30	3,80	4,50	3300
IKQ40N120CT2	1200	Y	2 – 20	TO-247PLUS-3	Hard	TRENCHSTOP™ 2	40	1,75	2,90	3,10	3100
IKQ50N120CT2	1200	Y	2 – 20	TO-247PLUS-3	Hard	TRENCHSTOP™ 2	50	1,75	3,30	3,80	3900
IKQ75N120CT2	1200	Y	2 – 20	TO-247PLUS-3	Hard	TRENCHSTOP™ 2	75	1,75	4,10	6,70	5100
IHW20N135R3	1350	Y	8 – 60	TO-247	Soft	RC Soft Switching	20	1,60	1,30	-	-
IHW20N135R5	1350	Y	8 – 60	TO-247	Soft	RC Soft Switching	20	1,65	0,95	-	-
IHW30N135R3	1350	Y	8 – 60	TO-247	Soft	RC Soft Switching	30	1,65	0.41 *	-	-
IHW40N135R3	1350	Y	8 – 60	TO-247	Soft	RC Soft Switching	40	1,65	0.55 *	-	-
IHW30N160R2	1600	Y	8 – 60	TO-247	Soft	RC Soft Switching	30	2,35	4,37	-	-
SKB02N120	1200	Y	10 – 40	D2PAK (TO-263)	Hard	Fast	2.8	3,7	0,11	0,27	100
SKP02N120	1200	Y	10 – 40	TO-220	Hard	Fast	2.8	3,7	0,11	0,27	100
IKW15N120BH6	1200	Y	20 – 40	TO-247	Hard	TRENCHSTOP™ IGBT6	15	1,9	0,55	0,7	830
IKW40N120CS6	1200	Y	15 – 35	TO-247	Hard	TRENCHSTOP™ IGBT6	40	1,85	1,55	2,55	2600
IKY40N120CS6	1200	Y	15 – 35	TO-247PLUS-4	Hard	TRENCHSTOP™ IGBT6	40	1,85	1,55	1,45	2600
IKQ75N120CS6	1200	Y	15 – 35	TO-247PLUS-3	Hard	TRENCHSTOP™ IGBT6	75	1,85	2,95	5,15	4700
IKY75N120CS6	1200	Y	15 – 35	TO-247PLUS-4	Hard	TRENCHSTOP™ IGBT6	75	1,85	2,95	2,2	4700
IKB15N65EH5	650	Y	30 – 100	D2PAK (TO-263)	Hard	TRENCHSTOP™ 5	32	1,65	0,08	0,4	500
IKB20N65EH5	650	Y	30 – 100	D2PAK (TO-263)	Hard	TRENCHSTOP™ 5	40	1,65	0,13	0,56	500
IKB30N65EH5	650	Y	30 – 100	D2PAK (TO-263)	Hard	TRENCHSTOP™ 5	40	1,65	0,3	0,86	500
IKB30N65ES5	650	Y	10 – 30	D2PAK (TO-263)	Hard	TRENCHSTOP™ 5	40	1,35	0,32	0,56	500
IKB40N65ES5	650	Y	10 – 30	D2PAK (TO-263)	Hard	TRENCHSTOP™ 5	40	1,35	0,4	0,84	1100
IKB40N65EH5	650	Y	30 – 100	D2PAK (TO-263)	Hard	TRENCHSTOP™ 5	40	1,65	0,12	0,39	1000
IKB40N65EF5	650	Y	60 – 120	D2PAK (TO-263)	Hard	TRENCHSTOP™ 5	46	1,6	0,48	1,12	930
IKFW40N60DH3E	600	Y	20 – 100	Advanced Isolation TO-247	Hard	HighSpeed 3	44	2,3	0,36	0,87	400

Product type	$V_{CE(max)}$ [V]	Diode	Switching frequency [kHz]	Package	Switching Hard/Soft	Series	$I_{C(max)}$ @ 100° [A]	$V_{CE(sat)}$ (typ.) @ 25° [V]	E_{off} (typ.) @ 25° [mJ]	E_{on}(typ.) @ 25° [mJ]	Q_{rr} (typ.) @ 25° [mC]
IKFW50N60DH3E	600	Y	20 – 100	Advanced Isolation TO-247	Hard	HighSpeed 3	60	2,2	0,56	1,28	551
IKFW60N60DH3E	600	Y	20 – 100	Advanced Isolation TO-247	Hard	HighSpeed 3	74	2,2	0,72	1,57	550
IKFW50N60DH3	600	Y	20 – 100	Advanced Isolation TO-247	Hard	HighSpeed 3	60	1,85	0,61	1,22	510
IKFW60N60DH3	600	Y	20 – 100	Advanced Isolation TO-247	Hard	HighSpeed 3	63	1,85	0,93	1,74	1240
IKFW90N60DH3	600	Y	20 – 100	Advanced Isolation TO-247	Hard	HighSpeed 3	95	1,85	1,3	2,65	1940
IKFW50N60ET	600	Y	2 – 20	Advanced Isolation TO-247	Hard	TRENCHSTOP™	64	1,50	1,42	1,5	1240
IKFW75N60ET	600	Y	2 – 20	Advanced Isolation TO-247	Hard	TRENCHSTOP™	95	1,50	2,35	2,7	1940

* Soft Switching

Discrete IGBT without anti-parallel diode

Product type	$V_{CE(max)}$ [V]	Diode	Switching frequency [kHz]	Package	Switching Hard/Soft	Series	$I_{C(max)}$ @ 100° [A]	$V_{CE(sat)}$ (typ.) @ 25° [V]	E_{off} (typ.) @ 25° [mJ]	E_{on}(typ.) @ 25° [mJ]	Q_{rr} (typ.) @ 25° [mC]
IGA30N60H3	600	No	20 – 100	TO220-3 FP	Hard	HighSpeed 3	11	1.95	0.44	0.73	n/a
IGB20N60H3	600	No	20 – 100	D2PAK (TO-263)	Hard	HighSpeed 3	20	1.95	0.24	0.45	n/a
IGB30N60H3	600	No	20 – 100	D2PAK (TO-263)	Hard	HighSpeed 3	30	1.95	0.44	0.73	n/a
IGP20N60H3	600	No	20 – 100	TO-220	Hard	HighSpeed 3	20	1.95	0.24	0.45	n/a
IGP30N60H3	600	No	20 – 100	TO-220	Hard	HighSpeed 3	30	1.95	0.44	0.73	n/a
IGW100N60H3	600	No	20 – 100	TO-247	Hard	HighSpeed 3	120	1.85	1.90	3.70	n/a
IGW20N60H3	600	No	20 – 100	TO-247	Hard	HighSpeed 3	20	1.95	0.24	0.56	n/a
IGW30N60H3	600	No	20 – 100	TO-247	Hard	HighSpeed 3	30	1.95	0.60	0.94	n/a
IGW40N60H3	600	No	20 – 100	TO-247	Hard	HighSpeed 3	40	1.95	0.58	1.10	n/a
IGW50N60H3	600	No	20 – 100	TO-247	Hard	HighSpeed 3	50	1.85	0.91	1.45	n/a
IGW60N60H3	600	No	20 – 100	TO-247	Hard	HighSpeed 3	60	1.85	1.13	2.10	n/a
IGW75N60H3	600	No	20 – 100	TO-247	Hard	HighSpeed 3	75	1.85	1.70	3.00	n/a
IGB10N60T	600	No	2 – 20	D2PAK (TO-263)	Hard	TRENCHSTOP™	18	1.5	0.27	0.16	n/a
IGB15N60T	600	No	2 – 20	D2PAK (TO-263)	Hard	TRENCHSTOP™	23	1.5	0.35	0.22	n/a
IGB30N60T	600	No	2 – 20	D2PAK (TO-263)	Hard	TRENCHSTOP™	39	1.5	0.77	0.69	n/a
IGB50N60T	600	No	2 – 20	D2PAK (TO-263)	Hard	TRENCHSTOP™	90	1.5	1.40	1.20	n/a
IGD06N60T	600	No	2 – 20	DPAK (TO-252)	Hard	TRENCHSTOP™	6	1.5	0.11	0.09	n/a
IGP06N60T	600	No	2 – 20	TO-220	Hard	TRENCHSTOP™	6	1.5	0.11	0.09	n/a
IGP10N60T	600	No	2 – 20	TO-220	Hard	TRENCHSTOP™	18	1.5	0.27	0.16	n/a
IGP15N60T	600	No	2 – 20	TO-220	Hard	TRENCHSTOP™	23	1.5	0.35	0.22	n/a
IGP50N60T	600	No	2 – 20	TO-220	Hard	TRENCHSTOP™	64	1.5	1.40	1.20	n/a
IGU04N60T	600	No	2 – 20	TO-251	Hard	TRENCHSTOP™	4	1.5	0.08	0.06	n/a
IGW30N60T	600	No	2 – 20	TO-247	Hard	TRENCHSTOP™	39	1.5	0.77	0.69	n/a
IGW50N60T	600	No	2 – 20	TO-247	Hard	TRENCHSTOP™	64	1.5	1.40	1.20	n/a
IGW75N60T	600	No	2 – 20	TO-247	Hard	TRENCHSTOP™	75	1.5	2.50	2.00	n/a
IGW30N60TP	600	No	2 – 30	TO-247	Hard	TRENCHSTOP™ Perf.	38	1.6	0.74	0.99	n/a
IGW40N60TP	600	No	2 – 30	TO-247	Hard	TRENCHSTOP™ Perf.	48	1.6	1.05	1.63	n/a
IGW50N60TP	600	No	2 – 30	TO-247	Hard	TRENCHSTOP™ Perf.	61	1.6	1.39	2.25	n/a
IGP20N65F5	650	No	60 – 120	TO-220	Hard	TRENCHSTOP™ 5	21	1.6	0.06	0.16	n/a
IGP20N65H5	650	No	30 – 100	TO-220	Hard	TRENCHSTOP™ 5	21	1.65	0.06	0.17	n/a
IGP30N65F5	650	No	60 – 120	TO-220	Hard	TRENCHSTOP™ 5	35	1.6	0.07	0.28	n/a

Product type	$V_{CE(max)}$ [V]	Diode	Switching frequency [kHz]	Package	Switching Hard/Soft	Series	$I_{C(max)}$ @ 100° [A]	$V_{CE(sat)}$ (typ.) @ 25° [V]	E_{off} (typ.) @ 25° [mJ]	E_{on} (typ.) @ 25° [mJ]	Q_{rr} (typ.) @ 25° [mC]
IGP30N65H5	650	No	30 – 100	TO-220	Hard	TRENCHSTOP™ 5	35	1.65	0.10	0.28	n/a
IGP40N65F5	650	No	60 – 120	TO-220	Hard	TRENCHSTOP™ 5	46	1.6	0.10	0.36	n/a
IGP40N65H5	650	No	30 – 100	TO-220	Hard	TRENCHSTOP™ 5	46	1.6	0.10	0.36	n/a
IGW30N65L5	650	No	50 Hz – 20 kHz	TO-247	Hard	TRENCHSTOP™ 5	62	1.05	1.35	0.47	n/a
IGW40N65F5	650	No	60 – 120	TO-247	Hard	TRENCHSTOP™ 5	46	1.6	0.10	0.36	n/a
IGW40N65H5	650	No	30 – 100	TO-247	Hard	TRENCHSTOP™ 5	46	1.65	0.12	0.39	n/a
IGW50N65F5	650	No	60 – 120	TO-247	Hard	TRENCHSTOP™ 5	56	1.6	0.16	0.49	n/a
IGW50N65H5	650	No	30 – 100	TO-247	Hard	TRENCHSTOP™ 5	56	1.65	0.18	0.52	n/a
IGW75N65H5	650	No	30 – 100	TO-247	Hard	TRENCHSTOP™ 5	75	1.65	0.95	2.25	n/a
IGZ100N65H5	650	No	30 – 100	TO-247-4	Hard	TRENCHSTOP™ 5	101	1.65	0.77	0.85	n/a
IGZ50N65H5	650	No	30 – 100	TO-247-4	Hard	TRENCHSTOP™ 5	54	1.65	0.19	0.41	n/a
IGZ75N65H5	650	No	30 – 100	TO-247-4	Hard	TRENCHSTOP™ 5	75	1.65	0.43	0.68	n/a
IGW30N100T	1000	No	2 – 20	TO-247	Hard	TRENCHSTOP™	30	1.55	1.60	2.20	n/a
SGB02N120	1200	No	10 – 40	D2PAK (TO-263)	Hard	Fast	2.8	3.7	0.11	0.27	n/a
SGB07N120	1200	No	10 – 40	D2PAK (TO-263)	Hard	Fast	7.9	3.7	0.70	1.00	n/a
SGB15N120	1200	No	10 – 40	D2PAK (TO-263)	Hard	Fast	15	3.7	1.50	1.90	n/a
SGD02N120	1200	No	10 – 40	DPAK (TO-252)	Hard	Fast	2.8	3.7	0.11	0.27	n/a
SGP02N120	1200	No	10 – 40	TO-220	Hard	Fast	2.8	3.7	0.11	0.27	n/a
SGP07N120	1200	No	10 – 40	TO-220	Hard	Fast	7.9	3.7	0.70	1.00	n/a
SGP15N120	1200	No	10 – 40	TO-220	Hard	Fast	15	3.7	1.50	1.90	n/a
IGW15N120H3	1200	No	20 – 100	TO-247	Hard	HighSpeed 3	15	2.05	0.45	1.10	n/a
IGW25N120H3	1200	No	20 – 100	TO-247	Hard	HighSpeed 3	25	2.05	0.85	1.80	n/a
IGW40N120H3	1200	No	20 – 100	TO-247	Hard	HighSpeed 3	40	2.05	1.20	3.20	n/a
IGW08T120	1200	No	2 – 20	TO-247	Hard	TRENCHSTOP™	8	2.2	1.20	1.08	n/a
IGW15T120	1200	No	2 – 20	TO-247	Hard	TRENCHSTOP™	15	2.2	2.10	2.00	n/a
IGW25T120	1200	No	2 – 20	TO-247	Hard	TRENCHSTOP™	25	2.2	4.00	3.00	n/a
IGW40T120	1200	No	2 – 20	TO-247	Hard	TRENCHSTOP™	40	2.3	5.40	5.00	n/a
IGW60T120	1200	No	2 – 20	TO-247	Hard	TRENCHSTOP™	60	2.3	9.40	6.40	n/a
IGB15N65S5	650	No	10 – 30	D2PAK (TO-263)	Hard	TRENCHSTOP™ 5	23	1.35	0.14	0.25	n/a
IGB20N65S5	650	No	10 – 30	D2PAK (TO-263)	Hard	TRENCHSTOP™ 5	28	1.35	0.15	0.36	n/a
IGB50N65H5	650	No	30 – 100	D2PAK (TO-263)	Hard	TRENCHSTOP™ 5	53.7	1.65	0.75	1.56	n/a
IGB50N65S5	650	No	10 – 30	D2PAK (TO-263)	Hard	TRENCHSTOP™ 5	63	1.35	0.74	1.23	n/a

Published by
Infineon Technologies Austria AG
9500 Villach. Austria

Order number: B133-I0528-V1-7600-EU-EC
Date: 06 / 2018

Please note!
THIS DOCUMENT IS FOR INFORMATION PURPOSES ONLY AND ANY INFORMATION GIVEN HEREIN SHALL IN NO EVENT BE REGARDED AS A WARRANTY, GUARANTEE OR DESCRIPTION OF ANY FUNCTIONALITY, CONDITIONS AND/OR QUALITY OF OUR PRODUCTS OR ANY SUITABILITY FOR A PARTICULAR PURPOSE. WITH REGARD TO THE TECHNICAL SPECIFICATIONS OF OUR PRODUCTS, WE KINDLY ASK YOU TO REFER TO THE RELEVANT PRODUCT DATA SHEETS PROVIDED BY US. OUR CUSTOMERS AND THEIR TECHNICAL DEPARTMENTS ARE REQUIRED TO EVALUATE THE SUITABILITY OF OUR PRODUCTS FOR THE INTENDED APPLICATION.

WE RESERVE THE RIGHT TO CHANGE THIS DOCUMENT AND/OR THE INFORMATION GIVEN HEREIN AT ANY TIME.

Additional information
For further information on technologies, our products, the application of our products, delivery terms and conditions and/or prices, please contact your nearest Infineon Technologies office (www.infineon.com).

Warnings
Due to technical requirements, our products may contain dangerous substances. For information on the types in question, please contact your nearest Infineon Technologies office.

Except as otherwise explicitly approved by us in a written document signed by authorized representatives of Infineon Technologies, our products may not be used in any life-endangering applications, including but not limited to medical, nuclear, military, life-critical or any other applications where a failure of the product or any consequences of the use thereof can result in personal injury.

Product Brief

Stacks

We are the experts in power systems

To shorten customers time to market, we provide reliable and highest quality stacks and assemblies offering optimized thermal management. These advanced systems provide design support and help to optimize system costs.

The PrimeSTACK™ family is a complete switch solution for power electronic circuits, also containing all necessary components for current, voltage and temperature measurements.

Control electronics and the power connections are fully separated from each other by “reinforced isolation”. With several superior monitor functions, PrimeSTACK™ offers a self-protecting switch function and enables designers to quickly and easily develop highly efficient and safe inverters. The product scope covers current ratings from 300 A up to 1800 A at 1200 V or 1700 V.

The ModSTACK™ family includes our IGBT modules with IGBT drivers to achieve current ratings from 800 A up to 3000 A at line supply up to 690 VAC. Appropriate interfaces and thermal management are included. Standard inverter topologies, such as half-bridge or 3-phase bridge, are available, as are various converter topologies.

Product Range

- PrimeSTACK™: 200 kW – 900 kW
- ModSTACK™ HD: 600 kW – 8 MW
- ModSTACK™ C: 600 kW – 1.2 MW
- ModSTACK™ 3: 800 kW – 3.0 MW [1)]
- ModSTACK™ HD: 500 kW – 8.0 MW [1)]

[1)] by paralleling

www.infineon.com/stacks

Key features

- Short time to market and reduced system costs due to “ready-to-use” power section
- Flexible system for power solutions due to modular approach
- Modular stack design for industrial approved cabinets
- Power range up to 8 MW in parallel operation mode
- Easy paralleling
- Optimized integrated thermal management
- Low inductance IGBT stack design

Applications

- Industrial drives and elevators
- Renewable energy
- Distributed power generation systems
- UPS
- Traction
- Energy treatment and HVDC conversion
- Galvanic, electrolysis
- Electroplating
- Pulsed power
- Asynchronous power links

PrimeSTACK™

The primary IGBT stack for your system



ModSTACK™ case size	C3	C4	CF (3 x C4)
Width x depth x height [mm] including heat sink, but excluding optional parts like capacitor box	216 x 280 x 167	216 x 360 x 167	645 x 438 x 167

General features

- Available with 1200 V & 1700 V IGBT
- Based on 62 mm modules
- Various standard heat sinks with forced air- or liquid cooling
- EiceDRIVER™ inside
- Reinforced isolation according to EN50178
- Optional DC link voltage monitoring
- Temperature sense
- Current sense of every output leg
- Analog output of all sensor signals
- Optional with capacitor box

ModSTACK™ C

1700 V_{CES}, V_{AC} = 690 V_{RMS}

	I_{rms} [1] [A]	f_{swmax} [kHz]	$V_{DC\,max}$ [V]	Cooling	Topology	Voltage sensor	Current sensor	Temperature sensor	DC link Capacitor	Housing [3]	Driver signal
2LS20017E42W	1520	4	1216	liquid	1/2B2I		X	X		MS C2 (205 x 399 x 118)	electrical

1) simulated at 3kHz, all other parameters refer to datasheet conditions
3) Width x depth x height [mm] including heatsink, but excluding optional parts like DC link capacitor box

Available configurations

Description	Circuit
1/2B2I	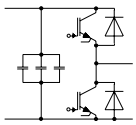

ModSTACK™ 3 and ModSTACK™ HD

A cost-effective approach for megawatt control

ModSTACK™ case size	ModSTACK™ 3	
Width x depth x height [mm]	1090 x 596 x 345	
Topology	B6I	
Cooling	forced air	liquid
Max. current [A_{RMS}] [1]	816	1120
Approximate maximum power [2] with cos(ϕ) = 0.85	840 kVA 710 kW	1290 kVA 1100 kW

[1] simulated at 3Khz, all other parameters refer to datasheet conditions
[2] typical output current at V_{DC} = 1100 V, f_{sw} = 3 kHz, V_{AC} = 690 V, f_0 = 50 Hz, cos (ϕ) = 0.85, T_A=40°C, T_j <= 150°C

ModSTACK™ case size	ModSTACK™ HD1	ModSTACK™ HD3
Width x depth x height [mm]	338 x 590 x 375	1090 x 596 x 366
Cooling	liquid	liquid
Topology	B6I	B6I
Max. current [1] [A_{RMS}]		
Approximate maximum power 2) with cos(ϕ) = 0.85	813 kVA 691 kW	2438 kVA 2072 kW

[1] simulated at 3Khz, all other parameters refer to datasheet conditions
[2] typical ouput current at V_{DC} = 1100 V, f_{sw} = 3 kHz, V_{AC} = 690 V, f_0 = 50 Hz, cos (ϕ) = 0.85, T_A=40°C, T_j <= 150°C

General features

- Modular stack system designed for industrial approved cabinets
- Low inductance DC link with polypropylene or electrolytic capacitors
- Integrated IGBT EiceDRIVER™
- Voltage signals for control and monitoring (currents, voltages, short circuit, heat sink temperature, failure signals)
- Liquid or forced air cooling available
- Up to 4 units can be operated in parallel
- Electrical or optical interface for digital control signals available

BIP-Stacks

Optimized solutions directly from Infineon Technologies Bipolar

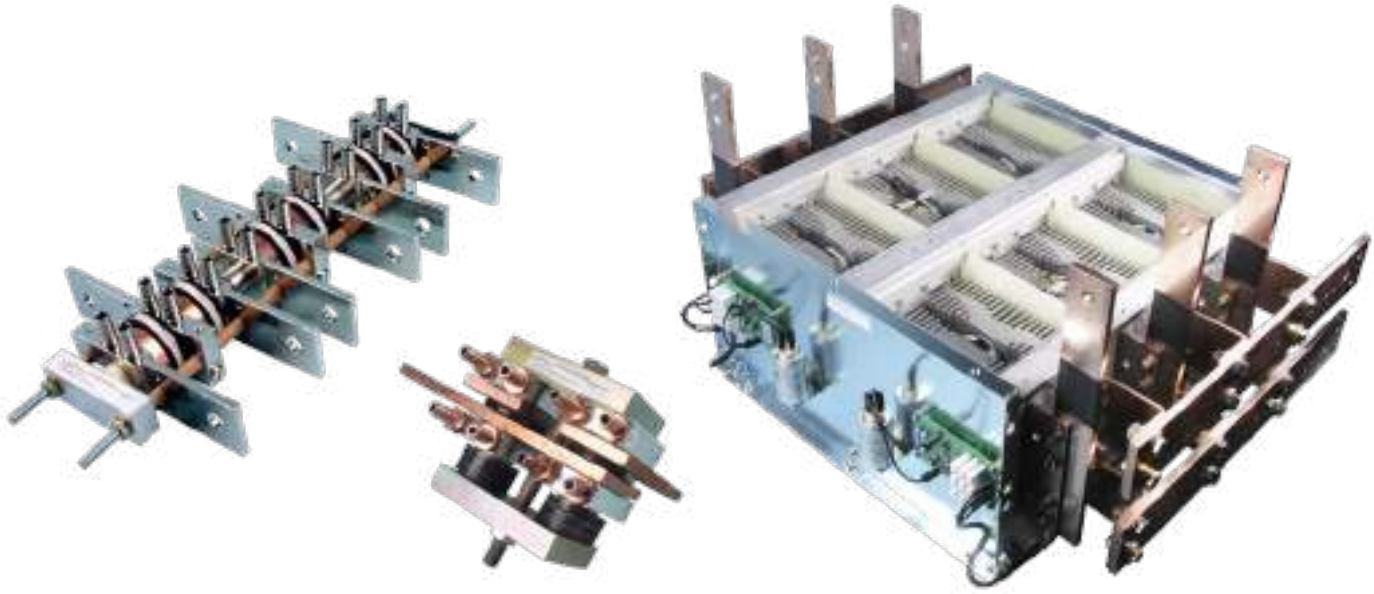

Benefits

Diode/SCR-Assemblies and Stacks from leading manufacturer of power semiconductors

› Minimize risks and reduce time to market
› Use our direct technical support
› Ask for customization to optimize your system performance

Main features

› Modules- and discs-assemblies up to several 10 kA / 40 kV
› Additional parts like water connectors, fans, fuses, snubbers and sensors
› Over 4,000 customized designs in portfolio
› Benefit from over 40 years of experience

Visit us & order

www.infineon-bipolarshop.com

Published by
Infineon Technologies AG
85579 Neubiberg, Germany

Order Number: B133-H9047-V9-7600-EU-EC-P
Date: 05 / 2016

Additional information
For further information on technologies, our products, the application of our products, delivery terms and conditions and/or prices, please contact your nearest Infineon Technologies office (www.infineon.com).

Warnings
Due to technical requirements, our products may contain dangerous substances. For information on the types in question, please contact your nearest Infineon Technologies office.

Except as otherwise explicitly approved by us in a written document signed by authorized representatives of Infineon Technologies, our products may not be used in any life-endangering applications, including but not limited to medical, nuclear, military, life-critical or any other applications where a failure of the product or any consequences of the use thereof can result in personal injury.

модуль Eupec, Infineon, igbt

Eupec, Infineon в Беларуси

купить, продажа

Электронные компоненты, радиодетали

где и как купить в Минске?

Категория: **модуль Eupec, Infineon, , igbt, мост диодный**

КАТАЛОГ EUPEC, INFINEON, 2020 МИНСК

каталог, описание, технические, характеристики, datasheet, параметры, маркировка, габариты, фото, семикрон, Eupec, Infineon, , мост, диодный, однофазный, трехфазный, igbt, модуль